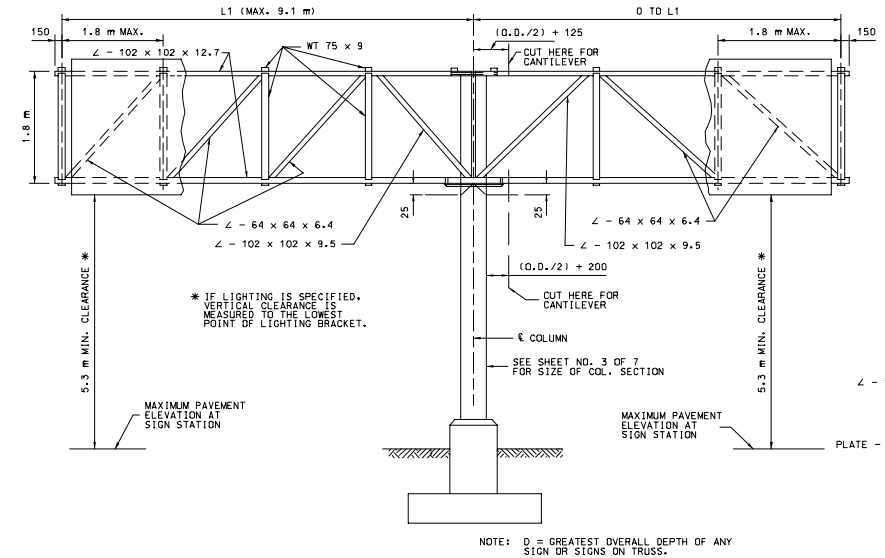

ELEVATION

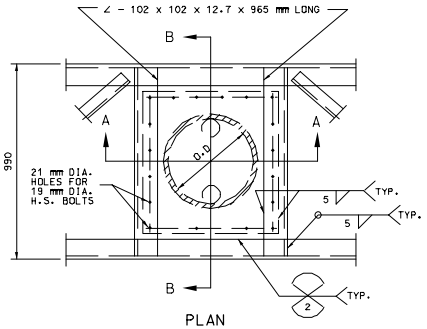

PLAN

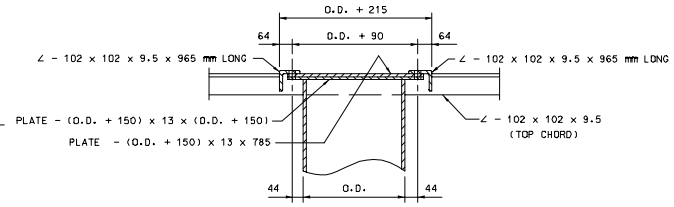

SECTION A-A

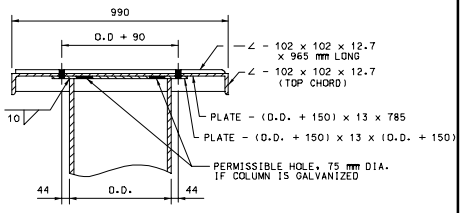

SECTION B-B

DETAILS OF TRUSS TOP CONNECTION TO COLUMN

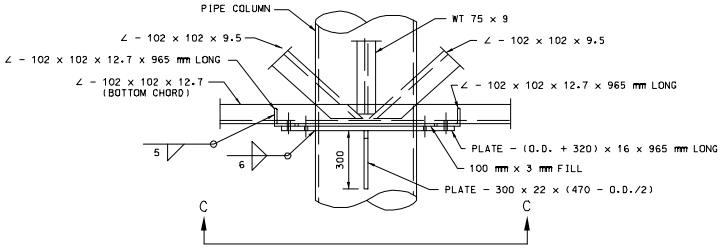

SIDE ELEVATION

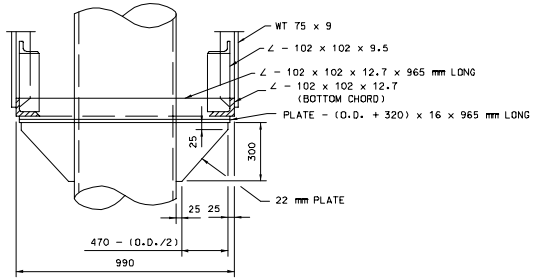

END ELEVATION

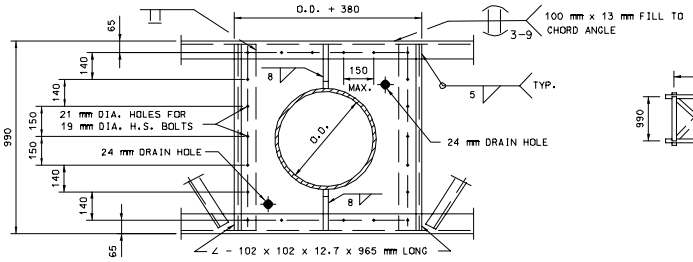

VIEW C-C

DETAILS OF TRUSS BOTTOM CONNECTION TO COLUMN

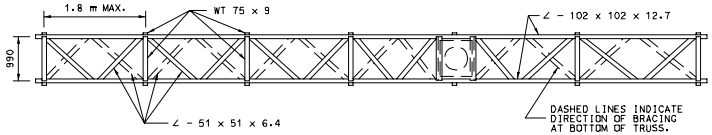

NOTE: TRUSSES AND COLUMN BASE PLATES: ASTM A36
ANCHOR BOLTS: ASTM A307.
FOR ADDITIONAL INFORMATION SEE DATA SHEET.

PLAN

DETAILS OF BUTTERFLY AND CANTILEVER TRUSS

GENERAL NOTES:

ALL DIMENSIONS SHOWN ARE IN mm UNLESS OTHERWISE NOTED.

ALL FASTENERS SHALL HAVE A HARDENED WASHER UNDER THE NUT OR BOLT HEAD, WHICHEVER IS TURNED IN TIGHTENING.

ZINC CHROMATE PRIMER SHALL MEET THE REQUIREMENTS OF FEDERAL SPECIFICATION TT-P-645 OR TT-P-1757 AND SHALL BE ACCEPTED ON THE BASIS OF THE LABEL SHOWING CONFORMANCE OR A MANUFACTURER'S CERTIFICATION.

MISSOURI HIGHWAYS AND TRANSPORTATION COMMISSION			
	OVERHEAD SIGN TRUSSES BUTTERFLY & CANTILEVER STRUCTURAL STEEL		
DATE:_____	EFFECTIVE: 07-01-2002	M903.12T	1/5

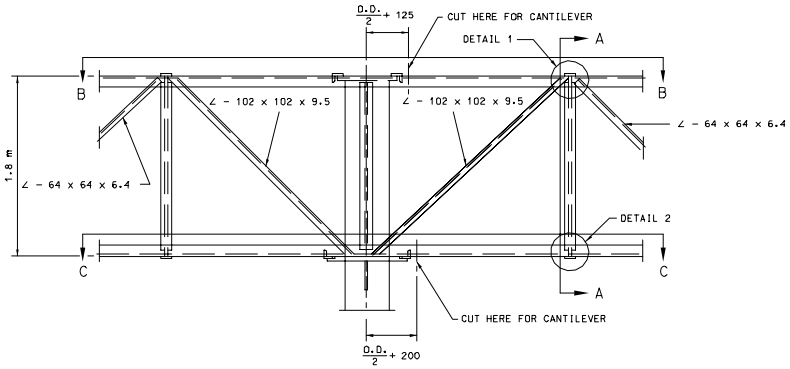

PART ELEVATION OF BUTTERFLY TRUSS

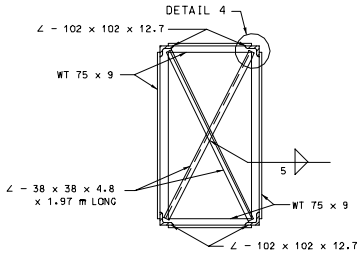

SECTION A-A

NOTE: SHRINK ∠ - 38 X 38 X 4.8 IF NECESSARY TO TAKE UP DISTORTIONAL SLACK.

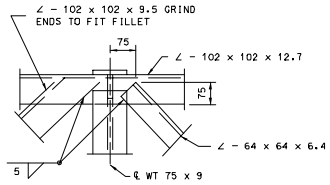

DETAIL 1

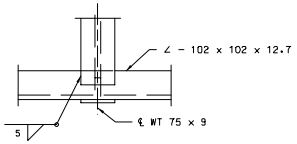

DETAIL 2

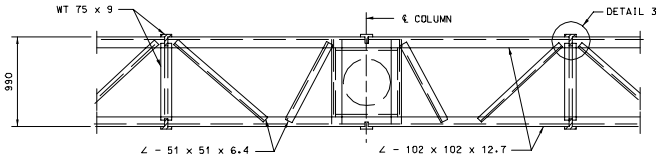

SECTION B-B

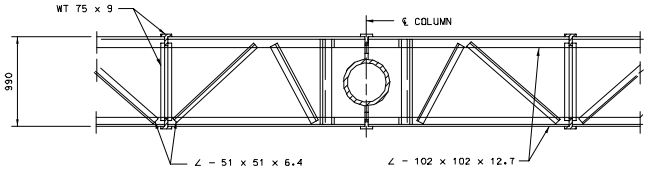

SECTION C-C

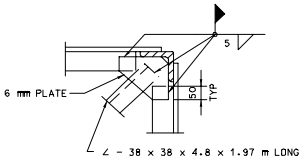

SECTION E-E
(SPLICE ONLY)

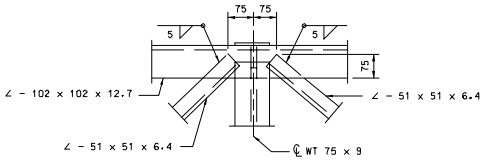

DETAIL 3

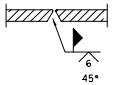

SECTION D-D

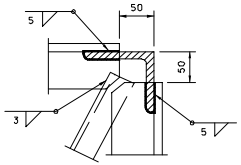

DETAIL 4

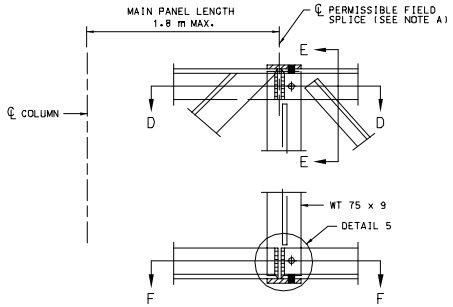

LOCATION OF FIELD SPLICE

NOTE "A": SPLICING A CHORD ANGLES IN THE SHOP AND THE FIELD SPLICE SHOWN IN THIS SHEET WILL NOT BE ALLOWED WITHOUT SPECIAL PERMISSION. IF PERMISSION IS GRANTED SUCH SPLICES SHALL BE LOCATED AT THE CENTER LINE OF MAIN PANEL POINT NEXT TO COLUMN.

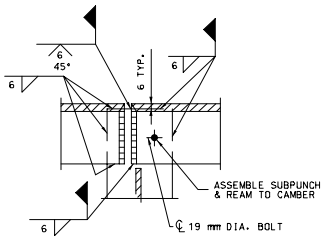

SECTION F-F

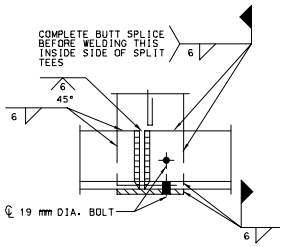

DETAIL 5

NOTE: 19 mm DIA. BOLTS SHALL BE REMOVED AFTER WELDING IS COMPLETE. BOLT HOLES SHALL BE PLUGGED AND THE OUTSIDE FACE GROUND SMOOTH.

GENERAL NOTES:

ALL DIMENSIONS SHOWN ARE IN mm UNLESS OTHERWISE NOTED.

MISSOURI HIGHWAYS AND TRANSPORTATION COMMISSION			
	OVERHEAD SIGN TRUSSES BUTTERFLY & CANTILEVER STRUCTURAL STEEL		
DATE:_____	EFFECTIVE: 07-01-2002	M903.12T	2/5

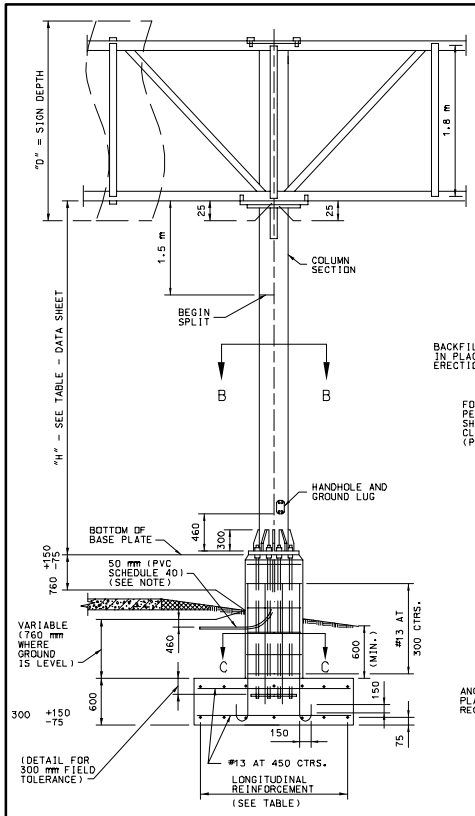

NOTE: THE 50 mm CONDUIT IN THE CONCRETE PEDESTAL SHALL BE PVC SCHEDULE 40 AND SHALL BE PLACED WITH A MINUMUM RADIUS BEND OF 240 mm.

ELEVATION

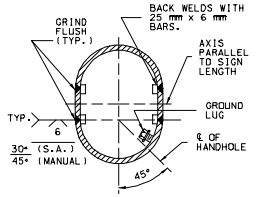

SECTION B-B
(FOR SPLIT COLUMNS ONLY)

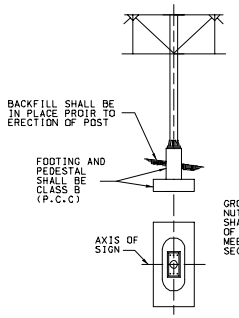

DETAIL SHOWING AXIS OF SIGN

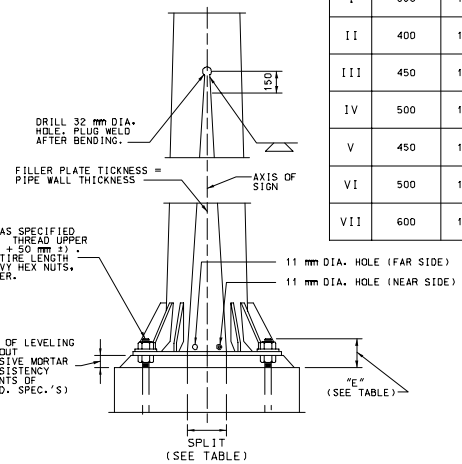

PART ELEVATION

POST TYPE	PIPE COLUMN DIA (mm)	PIPE COLUMN kg/m	DIMENSION "E" (mm)	SPLIT (mm)	BASE PLATE SIZE* (mm)	ANCHOR BOLTS DIA. NO.	ANCHOR BOLTS DIA. (mm)	PEDESTAL SIZE (mm) a	PEDESTAL SIZE (mm) b	FOOTING SIZE * (mm)	LONGITUDINAL FOOTING REINFORCEMENT TOP	LONGITUDINAL FOOTING REINFORCEMENT BOTTOM	CONCRETE (m^3)
I	350	107.28	190	0	710 x 710 x 38	8	44	1170	1015	2440 x 3355	7 - #16 BARS	7 - #16 BARS	7.9
II	400	123.18	215	0	760 x 760 x 44	8	51	1220	1065	2745 x 3660	8 - #16 BARS	9 - #16 BARS	9.3
III	450	139.07	215	0	810 x 810 x 44	10	51	1270	1120	3050 x 3960	9 - #16 BARS	9 - #16 BARS	10.9
IV	500	154.97	215	0	860 x 860 x 50	10	57	1320	1170	3050 x 4260	10 - #16 BARS	10 - #16 BARS	11.7
V	450	139.07	215	180	990 x 810 x 50	10	57	1450	1120	2745 x 5180	10 - #16 BARS	10 - #22 BARS	12.5
VI	500	154.97	215	205	1070 x 860 x 57	10	57	1525	1170	2745 x 5790	11 - #16 BARS	11 - #22 BARS	13.8
VII	600	186.75	230	205	1170 x 970 x 57	10	64	1625	1270	3050 x 6100	11 - #16 BARS	11 - #22 BARS	16.2

* BASE PLATES, PEDESTAL, AND FOOTINGS, LONGER SIDES SHALL BE NORMAL TO AXIS OF SIGN.

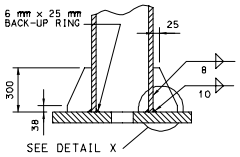

PART SECTION A-A

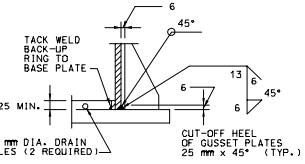

DETAIL X

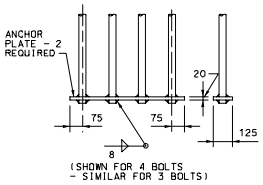

(SHOWN FOR 4 BOLTS - SIMILAR FOR 3 BOLTS)

ANCHORAGE DETAIL A

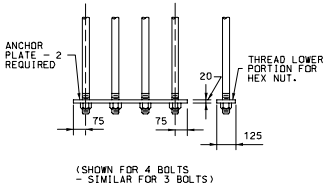

(SHOWN FOR 4 BOLTS - SIMILAR FOR 3 BOLTS)

ANCHORAGE DETAIL B
(OPTIONAL)

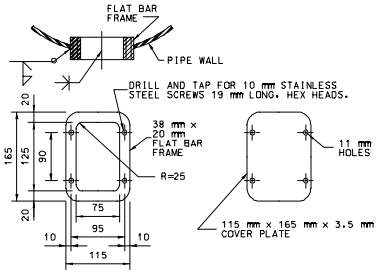

NOTE: HANDHOLE REQUIRED ONLY IN POWER COLUMN.

HANDHOLE AND COVER DETAILS

GENERAL NOTES:

ALL DIMENSIONS SHOWN ARE IN mm UNLESS OTHERWISE NOTED.

A TAPERED TUBE OF EQUIVALENT SIZE AND THICKNESS MAY BE SUBSTITUTED FOR PIPE POST.

ALL STEEL PIPE COLUMNS SHALL BE EITHER GRADE "B" SEAMLESS STEEL PIPE OR GRADE "B" ELECTRIC RESISTANCE WELDED STEEL PIPE: A.S.T.M. SPECIFICATION A53. NO OBJECTIONABLE SEAMS WILL BE PERMITTED.

ALL STRUCTURES SHALL BE GROUNDED.

BURR THREADS ON ALL ANCHOR BOLTS.

A HORIZONTAL WELDED SPLICE MAY BE FABRICATED IN THE COLUMN BETWEEN THE TOP OF PIPE AND 1200 mm BELOW THE BOTTOM CHORDS OF THE TRUSS WHEN DETAILED ON THE SHOP DRAWINGS AND APPROVED BY THE ENGINEER.

GROUND LUGS SHALL BE LOCATED INSIDE COLUMN NEAR HAND HOLE.

QUANTITIES FOR PEDESTAL, BASED ON NOMINAL HEIGHT OF 1500 mm.

QUANTITIES FOR FOOTING, BASED ON NOMINAL DEPTH OF 600 mm.

QUANTITIES SHOWN ARE FOR ONE COLUMN ONLY.

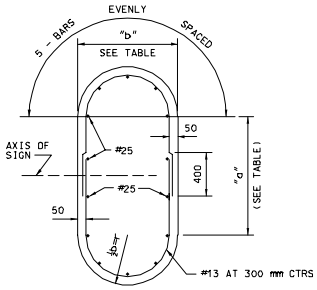

SECTION C-C
(TYPICAL SECTION SHOWING REINFORCING STEEL)

NOTE: FOR DETAILS OF ALTERNATE PEDESTAL, SEE SHEET NO. 4 OF 5.

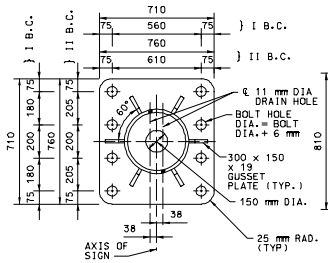

I AND II B.C.
(8 ANCHOR TYPE)

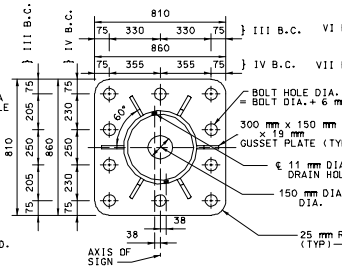

III AND IV B.C.
(10 ANCHOR TYPE)

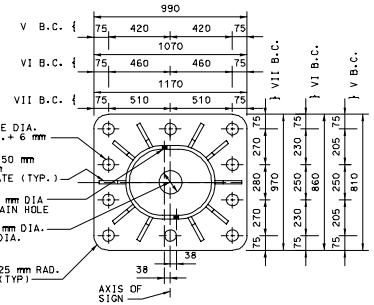

V, VI, AND VII B.C.
(10 ANCHOR TYPE)

TYPICAL BASE PLATES

MISSOURI HIGHWAYS AND TRANSPORTATION COMMISSION

OVERHEAD SIGN TRUSSES

BUTTERFLY & CANTILEVER STRUCTURAL STEEL

DATE:_____ | EFFECTIVE: 07-01-2002 | M903.12T | 3/5

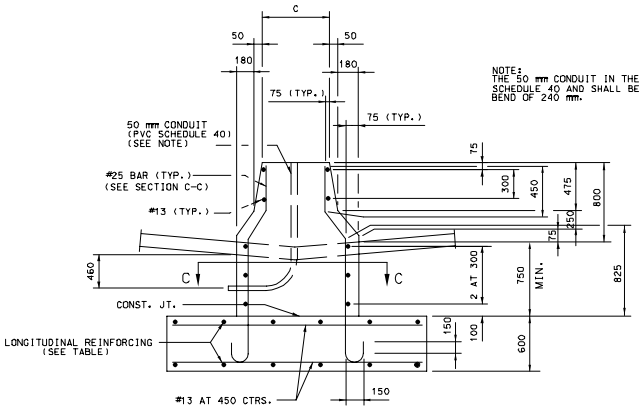

NOTE:
THE 50 mm CONDUIT IN THE CONCRETE PEDESTAL SHALL BE PVC SCHEDULE 40 AND SHALL BE PLACED WITH A MIN. RADIUS BEND OF 240 mm.

PART ELEVATION
(TYPE A CONCRETE TRAFFIC BARRIER)

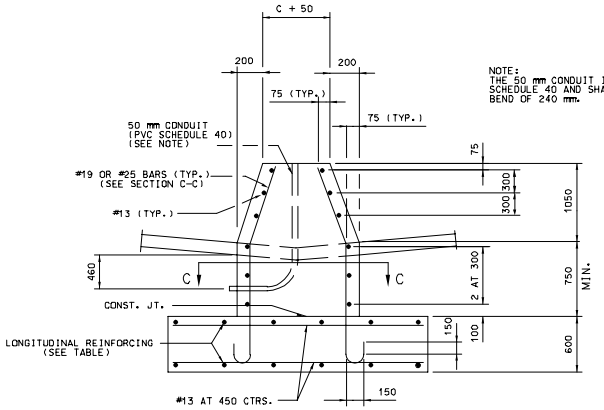

NOTE:
THE 50 mm CONDUIT IN THE CONCRETE PEDESTAL SHALL BE PVC SCHEDULE 40 AND SHALL BE PLACED WITH A MIN. RADIUS BEND OF 240 mm.

PART ELEVATION
(TYPE C CONCRETE TRAFFIC BARRIER)

POST TYPE	PIPE COLUMN		PEDESTAL SIZE ✳ (mm)			FOOTING SIZE ✳ (mm)	LONGITUDINAL FOOTING REINFORCEMENT		CONCRETE m³	
	DIA. (mm)	kg/m	c	d	e		TOP	BOTTOM	TYPE A MEDIAN BARRIER	TYPE C MEDIAN BARRIER
I B.C.	350	107.28	760	1830	380	2440 x 3555	8 - #16 BARS	8 - #16 BARS	8.2	8.8
II B.C.	400	123.18	815	1905	380	2745 x 3660	9 - #16 BARS	9 - #16 BARS	9.3	10.0
III B.C.	450	139.07	865	1980	380	3050 x 3960	10 - #16 BARS	10 - #16 BARS	10.8	11.6
IV B.C.	500	154.97	915	2055	460	3050 x 4265	10 - #16 BARS	10 - #16 BARS	11.7	12.5
V B.C.	450	139.07	865	2135	300	2745 x 5180	9 - #16 BARS	10 - #22 BARS	12.4	13.2
VI B.C.	500	154.97	915	2285	380	2745 x 5790	9 - #16 BARS	10 - #22 BARS	13.9	14.7
VII B.C.	600	186.75	1015	2390	380	3050 x 6100	10 - #16 BARS	12 - #22 BARS	16.1	17.0

✳ BASE PLATES, PEDESTAL, AND FOOTINGS LONGER SIDES SHALL BE NORMAL TO AXIS OF SIGN.

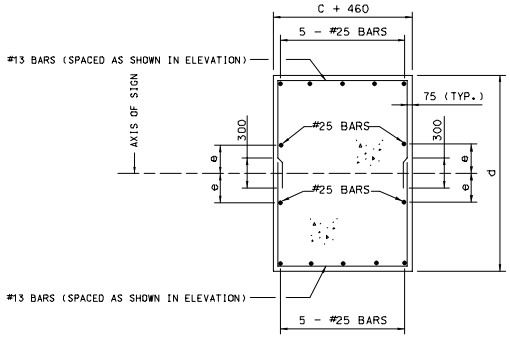

SECTION C-C
TYPICAL SECTION SHOWING
REINFORCING STEEL

DETAILS OF ALTERNATE PEDESTAL
(TO BE USED ADJACENT TO TYPE "A" OR "C" MEDIAN BARRIER)

GENERAL NOTES:

ALL DIMENSIONS SHOWN ARE IN mm UNLESS OTHERWISE NOTED.

A TAPERED TUBE OF EQUILVALENT SIZE AND THICKNESS MAY BE SUBSTITUTED FOR PIPE POST.

ALL STEEL PIPE COLUMNS SHALL BE EITHER GRADE "B" SEAMLESS STEEL PIPE OR GRADE "B" ELECTRIC RESISTANCE WELDED STEEL PIPE; A.S.T.M. SPECIFICATION A53. NO OBJECTIONABLE SEAMS WILL BE PERMITTED.

ALL STRUCTURES SHALL BE GROUNDED.

BURR THREADS ON ALL ANCHOR BOLTS.

PIPE COLUMN, BASE PLATE, ANCHOR BOLTS AND NOTES PERTAINING TO THESE ITEMS HAVE BEEN OMITTED FOR CLARITY. REFER TO SHEET NO. 4 OF 6 FOR DETAILS OF THESE ITEMS.

GROUND LUGS SHALL BE LOCATED INSIDE COLUMN NEAR HAND HOLE.

QUANTITIES FOR PEDESTAL ARE BASED ON NOMINAL HEIGHT OF 1550 mm (TYPE A MEDIAN BARRIER) OR 1800 mm (TYPE C MEDIAN BARRIER).

QUANTITIES FOR FOOTING ARE BASED ON NOMINAL DEPTH OF 600 mm.

QUANTITIES SHOWN ARE FOR ONE COLUMN ONLY.

MISSOURI HIGHWAYS AND TRANSPORTATION COMMISSION

OVERHEAD SIGN TRUSSES

BUTTERFLY & CANTILEVER
STRUCTURAL STEEL

DATE:_____ | EFFECTIVE: 07-01-2002 | M903.12T | 4/5

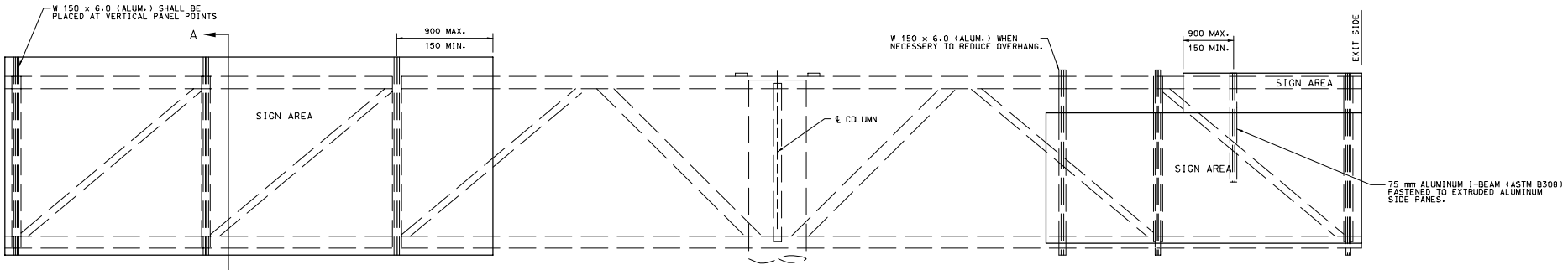

TYPICAL ELEVATION OF SIGNS COMPONENTS

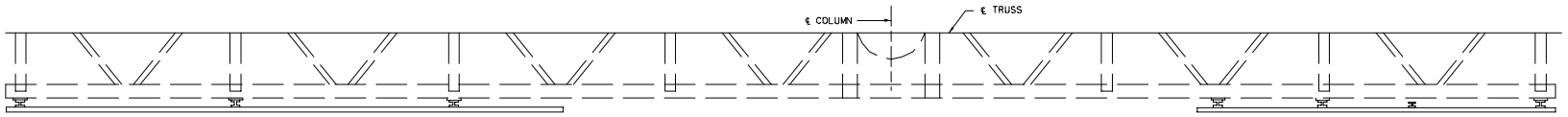

TYPICAL HALF-PLAN OF SIGN COMPONENTS

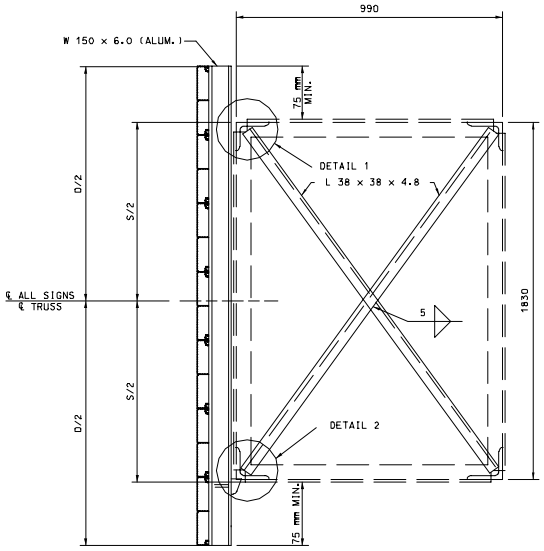

SECTION A-A

TYPICAL SECTION OF SIGN SUPPORT

NOTE: "D" = GREATEST OVERALL DEPTH OF ANY SIGNS ON TRUSSES.

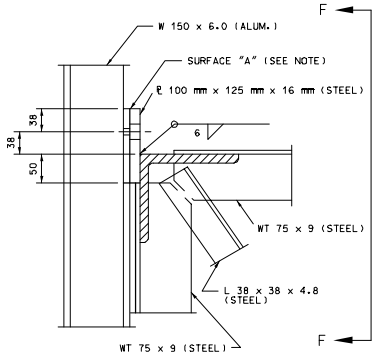

DETAIL 1

NOTE: SURFACE "A". ZINC CHROMATE ON ALUMINUM SURFACES. NORMAL CLEANING AND PAINTING ON STEEL SURFACES. ZINC CHROMATE IS NOT REQUIRED WHEN STEEL IS GALVANIZED.

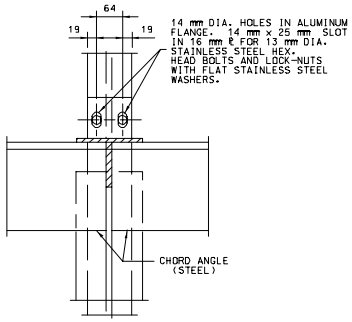

SECTION F-F

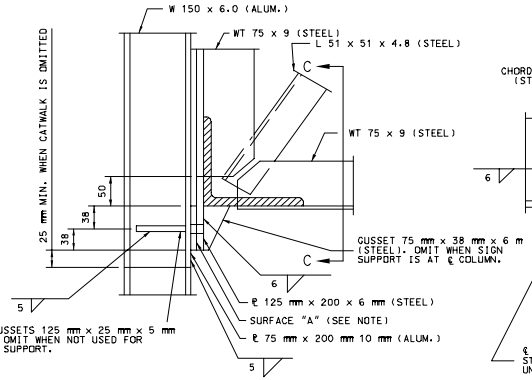

DETAIL 2

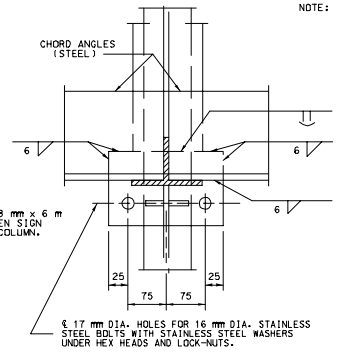

SECTION C-C

GENERAL NOTES:

ALL DIMENSIONS SHOWN ARE IN mm UNLESS OTHERWISE NOTED.

EXIT NO. PANELS SHALL BE MONTED FLUSH WITH THE EXIT SIE OF THE GUIDE SIGN

ALL SIGNS SHALL BE CENTERED VERTICALLY ABOUT THE HORIZONTAL ℄ OF THE TRUSS.

SEE STANDARD PLAN 903.09 FOR LIGHTING DETAILS IF LIGHTING THE SIGN IS NECESSARY.

SEE STANDARD PLAN 903.03 FOR SIGN MOUNTING DETAILS.

MISSOURI HIGHWAYS AND TRANSPORTATION COMMISSION			
	OVERHEAD SIGN TRUSSES STRUCTURAL STEEL BUTTERFLY & CANTILEVER		
DATE:_____	EFFECTIVE: 07-01-2002	M903.12T	5/5