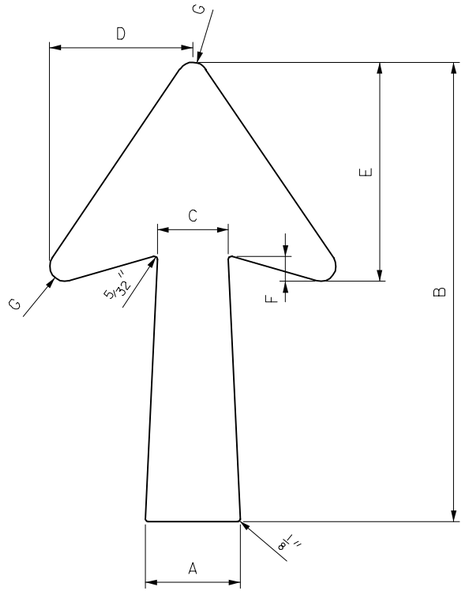

TYPE A

TYPE A ARROW TABLE							
LETTER SIZE	A	B	C	D	E	F	G
200 U.C.	125	635	95	180	250	35	19
270 & 335 U.C.	150	760	115	220	300	40	22
400 U.C.	180	890	135	280	360	45	25

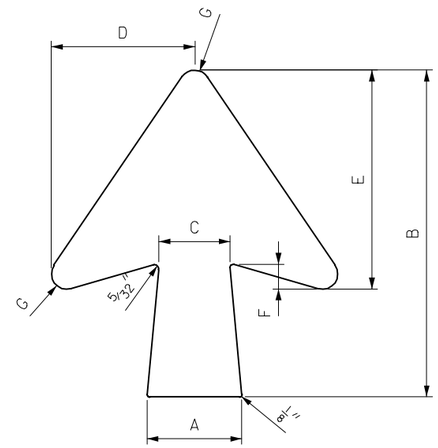

TYPE B

TYPE B ARROW TABLE							
LETTER SIZE	A	B	C	D	E	F	G
200 - 270 U.C.	125	430	95	180	250	35	19
335 U.C.	150	510	115	220	300	40	22
400 U.C.	180	635	135	280	360	45	25

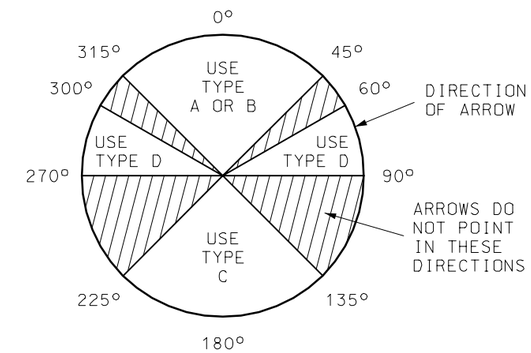

EXAMPLE: 30° - USE TYPE A OR B
90° - USE TYPE D

DIRECTION OF ARROW HELPS DETERMINE WHICH ARROW TO USE

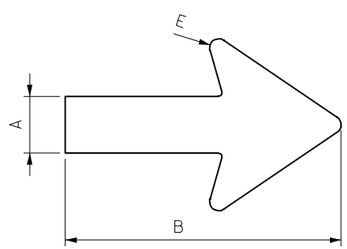

TYPE D

TYPE D ARROW TABLE					
LETTER SIZE	A	B	C	D	E
150 mm U.C.✳✳	60	230 MIN.	75	115	11
200 U.C.	70	310	90	155	14
270 U.C.	83	368	110	180	16
335 U.C.	95	425	128	210	19
400 U.C.	114	508	153	250	22
500 U.C.	140	622	190	310	29

✳ FOR HORIZONTAL PLACEMENT UNDER LEGEND, DIMENSION "B" WILL BE EXTENDED, AT 300 mm INCREMENTS, TO APPROXIMATELY 50% OF THE MAXIMUM LEGEND WIDTH.

✳✳ FOR USE ON SIGNS WITH TYPE L-1 OR L-3 LEGENDS.

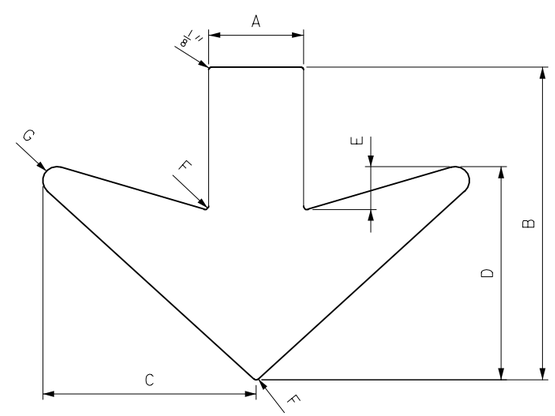

TYPE C

TYPE C OVERHEAD ARROW DIMENSIONS						
A	B	C	D	E	F	G
165	560	405	405	75	5	25

GENERAL NOTES:

ALL DIMENSION ARE SHOWN IN mm UNLESS OTHERWISE NOTED.

TYPE A SHOULD BE USED FOR SIGNS WITH TWO OR MORE LINES OF MESSAGE. TYPE B MAY BE USED ALONGSIDE A SINGLE LINE OF SIGN MESSAGE WHEN SIGN SIZE IS RESTRICTED BY LOCATION.

MISSOURI HIGHWAYS AND TRANSPORTATION COMMISSION

SPECIAL SIGNING CHARACTERS

DATE:_____ EFFECTIVE: 07-01-2004 **M903.01H** 1/1