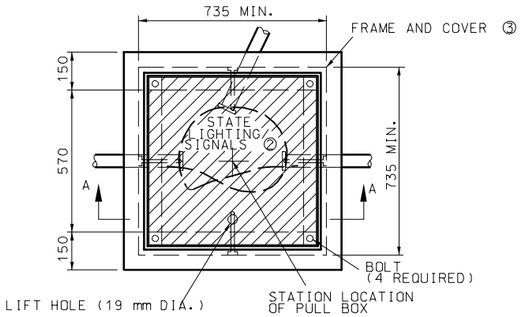

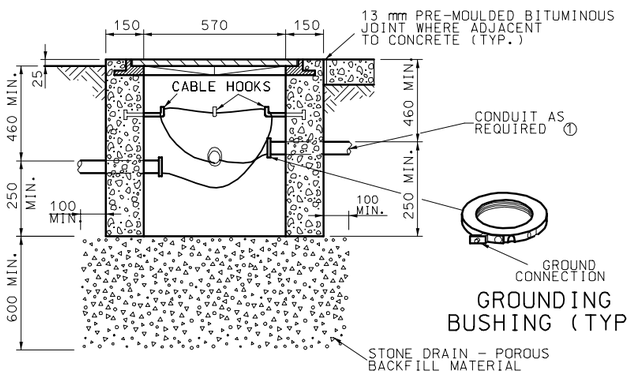

GROUNDING BUSHING (TYP) ①

SECTION A–A
TYPE I DRAIN TYPE

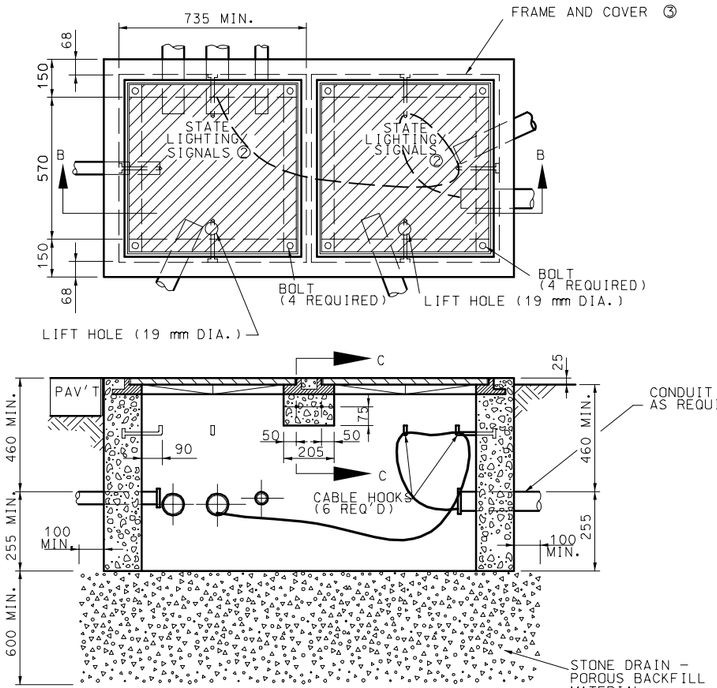

SECTION B–B
TYPE I DRAIN TYPE

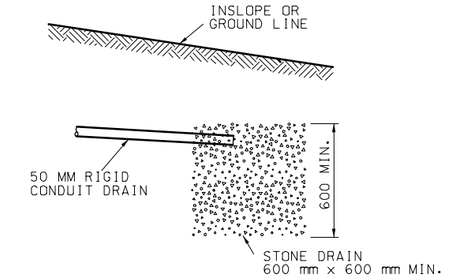

POROUS BACKFILL MATERIAL
TYPE A

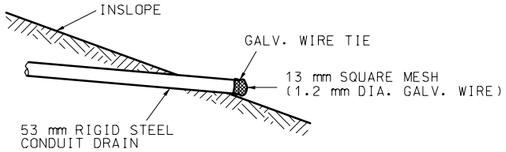

TYPE B

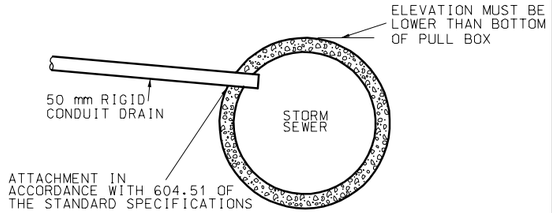

TYPE C

TYPE II DRAIN OUTLET DETAILS

① ALL METAL CONDUITS SHALL BE ELECTRICALLY BONDED BY A GROUND BUSHING AND 16 mm² BARE COPPER WIRE. FOR PVC CONDUIT. ALL GROUND WIRES SHALL BE CONNECTED.

② SIGNAL PULL BOXES SHALL BE EMBOSSED "STATE SIGNALS" AND LIGHTING PULL BOXES "STATE LIGHTING."

③ PULL BOX FRAMES AND COVERS SHALL BE CAST IRON AND THE FOLLOWING MINIMUM DIMENSIONS:

FRAME SIZE:	735 mm
FRAME HEIGHT:	105 mm
OPENING SIZE:	570 mm x 570 mm
FRAME WEIGHT:	54.4 kg.
COVER SIZE:	650 mm x 650 mm
COVER THICKNESS:	19 mm
COVER WEIGHT:	63.5 kg.

GENERAL NOTES:

ALL DIMENSIONS SHOWN ARE IN mm UNLESS OTHERWISE SPECIFIED.

ALL DIMENSIONS SHOWN ARE NOMINAL.

BOLT CLEANOUT DETAIL SHALL BE APPROVED BY ENGINEER.

PAVEMENT AND SUBGRADE SHALL BE AS SHOWN ON PLANS.

STONE DRAIN MATERIAL SHALL CONFORM TO SECTION 1009 OF THE STANDARD SPECIFICATIONS.

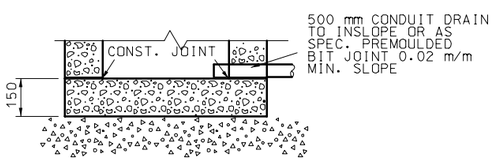

SECTION A–A
TYPE II DRAIN TYPE
(SEE DRAIN OUTLET DETAILS)
(SECTION ABOVE BREAK APPLICABLE TO TYPE I DRAIN)

STANDARD CONCRETE PULL BOX

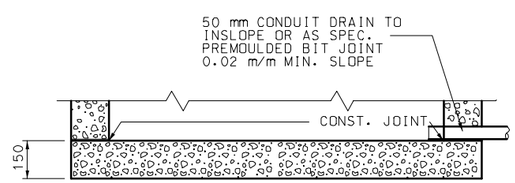

SECTION B–B
TYPE II DRAIN TYPE
(SEE DRAIN OUTLET DETAILS)
(SECTION ABOVE BREAK APPLICABLE TO TYPE I DRAIN)

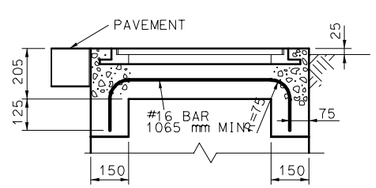

SECTION C–C

DOUBLE CONCRETE PULL BOX, TYPE A

MISSOURI HIGHWAYS AND TRANSPORTATION COMMISSION

TRAFFIC SIGNALS
CONCRETE PULL BOXES

DATE:_____ | EFFECTIVE: 07-01-2004 | **M902.20C** | 1/3

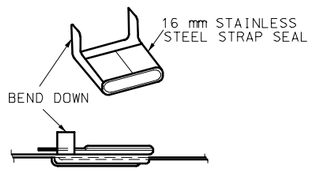

VIEW SHOWING
ENDS OF STRAP CLALMPED IN SEAL

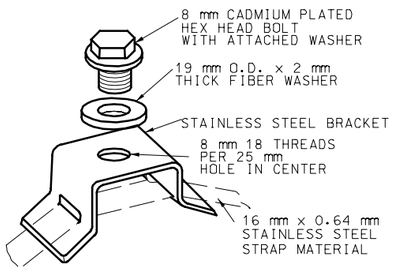

STRAP TYPE
SIGN SUPPORT

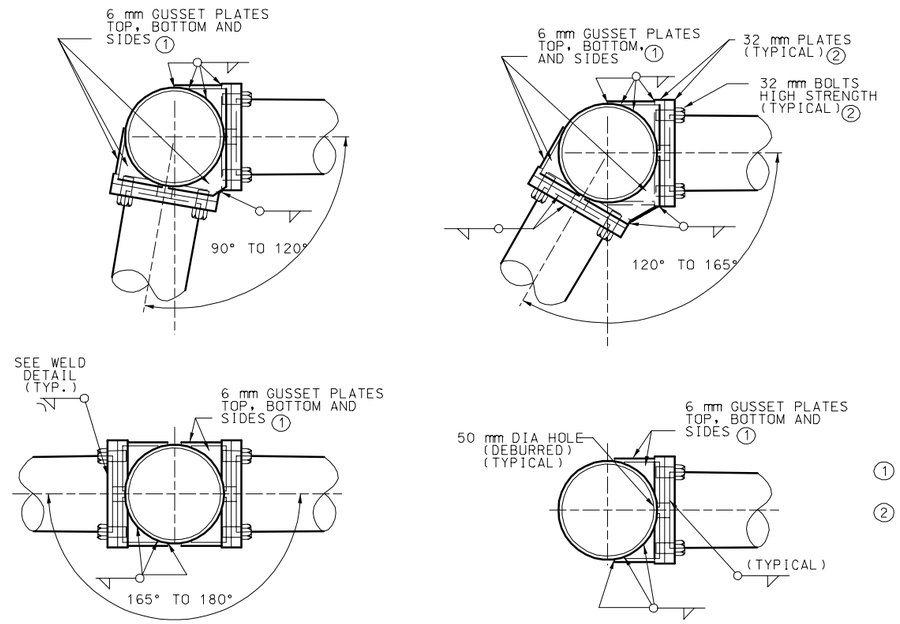

1. ANY OPENINGS BETWEEN TOP AND SIDE GUSSET PLATES SHALL BE SEALED WITH LIFETIME CAULK AT TIME OF INSTALLATION.
2. PLATE AND BOLT SIZES SHALL BE SHOWN ON FABRICATORS SHOP DRAWINGS AND SHALL BE SUBJECT TO APPROVAL.

ARM ATTACHMENTS

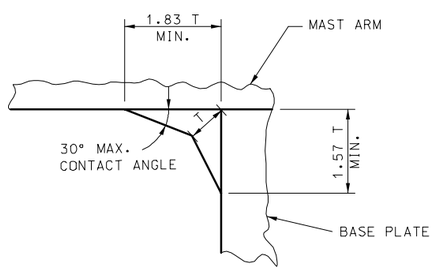

WELD DETAIL

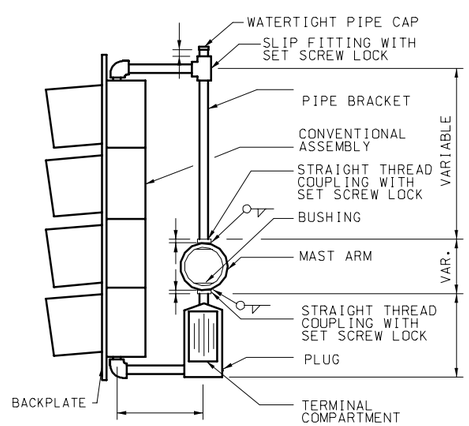

MAST ARM MOUNTED
SIGNAL HEAD

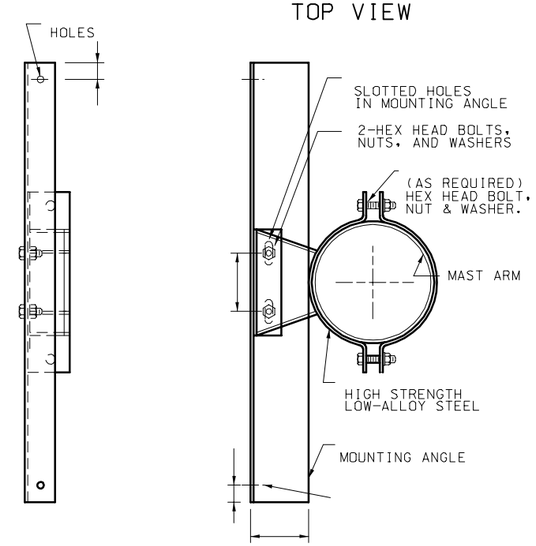

FRONT VIEW SIDE VIEW

SIGN BRACKET ASSEMBLY

ALTERNATE DESIGN MAY BE PROVIDED AS APPROVED BY ENGINEER

GENERAL NOTE:

ALL DIMENSIONS SHOWN ARE IN mm UNLESS OTHERWISE NOTED.

MISSOURI HIGHWAYS AND TRANSPORTATION COMMISSION

TRAFFIC SIGNALS
TUBULAR STEEL POSTS

DATE:_____ EFFECTIVE: 07-01-2004 **M902.40N** 2/3

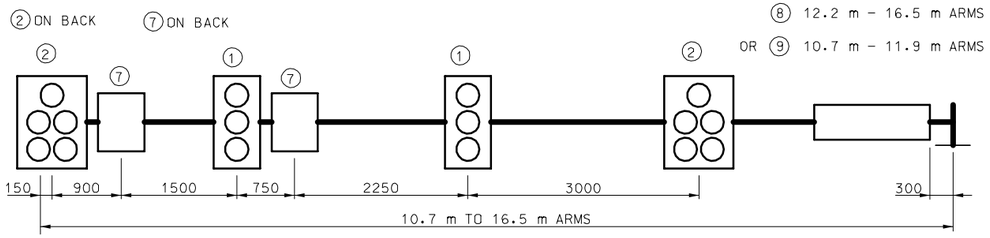

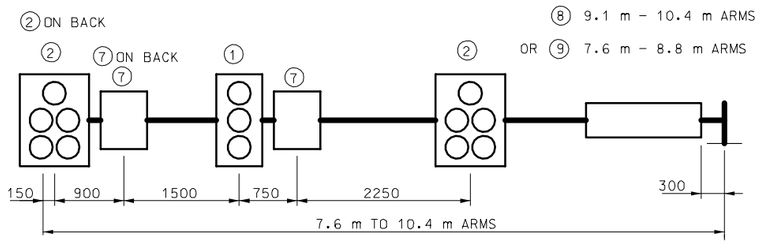

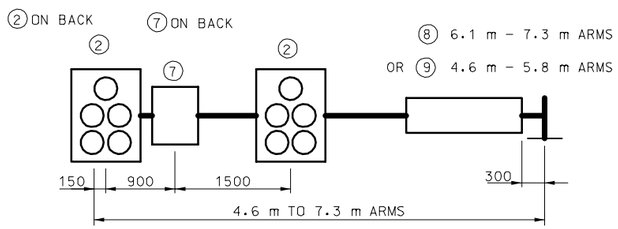

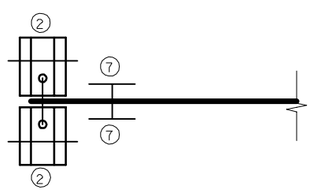

TYPICAL TOP VIEW

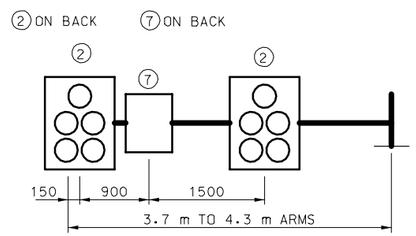

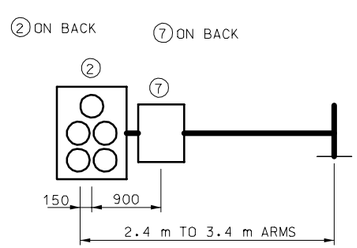

MAST ARM LOADING

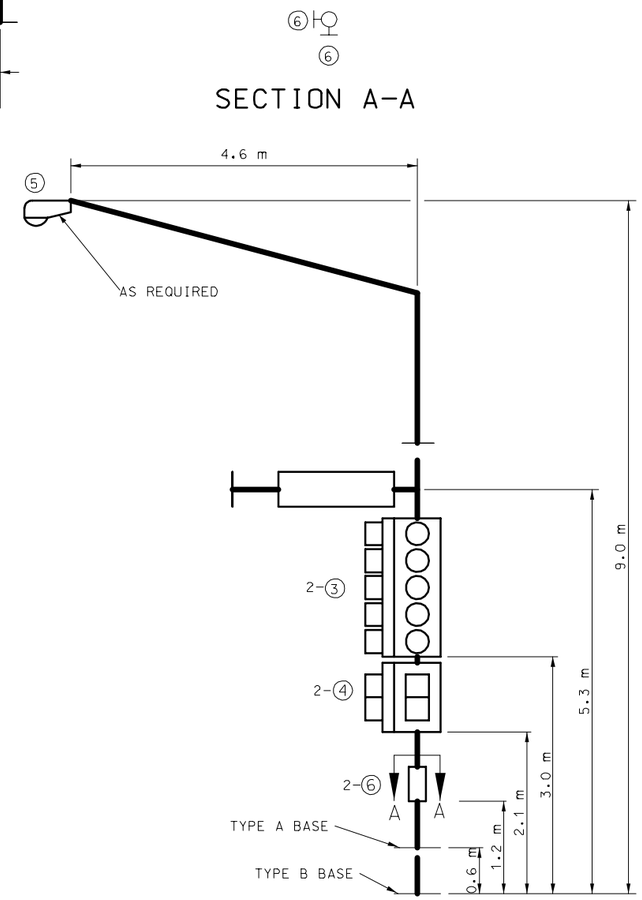

TYPICAL POST LOADING

ITEM NO.	DESCRIPTION	WEIGHT (kg)✱	PROJ. AREA (m^2)	SURFACE AREA (m^2)
1	3-SECTION OL HEAD	27	0.74	3.02
2	5-SECTION OL HEAD	45	1.12	4.41
3	VERT. 5-SECT. OL HEAD	45	1.12	4.69
4	2-SECTION OL HEAD	18	0.56	2.14
5	150 WATT LUMINAIRE	14	0.09	0.33
6	225 x 450 SIGN	1	0.10	N/A
7	600 x 750 SIGN	12	0.45	N/A
8	3000 x 450 SIGN	11	1.35	N/A
9	2400 x 400 SIGN	8	1.0	N/A
	2400 x 450 SIGN	10	1.12	N/A

OL- OPTICALLY LIMITED

✱ MOUNTING HARDWARE INCLUDED

STRUCTURAL DESIGN REQUIREMENTS:

STRUCTURAL SUPPORTS SHALL BE DESIGNED AND FABRICATED TO WITHSTAND THEIR OWN LOADING AND THE ATTACHMENT LOADING SHOWN ON THIS DRAWING OR ON THE PLANS, WHICHEVER IS GREATER. STRUCTURAL MEMBERS INCLUDE POSTS, MAST ARMS AND LUMINAIRE BRACKET ARMS, AS REQUIRED

DESIGN OF STRUCTURAL SUPPORTS SHALL BE BASED ON AASHTO STANDARD SPECIFICATIONS FOR STRUCTURAL SUPPORTS FOR HIGHWAY SIGNS, LUMINARIES AND TRAFFIC SIGNALS, 1994 OR LATEST REVISION, WITH THESE EXCEPTIONS:

MINIMUM DESIGN WIND SPEED OF 145 km AT 9.14 m ABOVE GROUND.

GROUP LOADING:

LOADS	PERCENT OF ALLOWABLE STRESS✱ (ALL MATERIALS)
GROUP I - DL	100
GROUP II - DL + W	133
GROUP III - DL + ICE + 0.5(✱✱)	133

✱NO LOAD REDUCTION FACTORS SHALL BE APPLIED IN CONJUNCTION WITH THESE INCREASED ALLOWABLE STRESSES.
✱✱W TO BE COMPUTED ON THE BASIS OF THE WIND PRESSURE FORMULA, 1197 Pa MINIMUM FOR W FOR GROUP III.

FOR TYPE B AND BL POSTS, ICE AND DEAD LOADING SHALL BE BASED ON THE COMBINED EFFECT OF DESIGN LOADING ON EACH ARM. WIND LOADING IS APPLIED AS DESCRIBED IN SECTION 1.2.5(5)(b) OF THE STANDARD SPECIFICATIONS FOR STRUCTURAL SUPPORTS, 1994 REVISION.

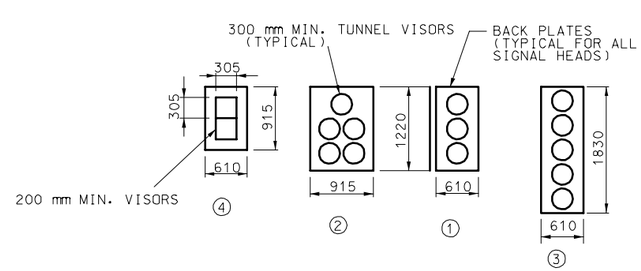

GENERAL NOTES:

ALL DIMENSIONS SHOWN ARE IN mm UNLESS OTHERWISE NOTED.

ATTACHMENT LOCATIONS ARE FOR STRUCTURAL DESIGN PURPOSES ONLY. ACTUAL LOCATIONS ARE SHOWN ON THE PLANS.

MINIMUM DESIGN LOADING FOR POST AND MAST ARM ATTACHMENTS

MISSOURI HIGHWAYS AND TRANSPORTATION COMMISSION

TRAFFIC SIGNALS
TUBULAR STEEL POSTS
DESIGN LOADING REQUIREMENTS

DATE:_____ EFFECTIVE: 07-01-2004 **M902.40N** 3/3