## STRUCTUAL STEEL POST FOR GROUND MOUNTED SIGNS

| POST DES. NO.✳ | NOM SIZE (IN.)(LBS/FT) | TORQUE AND HIGH STRENGTH BOLTS | BASE CONNECTION DATA TABLE (IN.) | | | | | | | | |
|---|---|---|---|---|---|---|---|---|---|---|---|
| | | | A | B | C | D | E | F | G | W | R |
| 1 | W6x9 | $\frac{5}{8}$″ ROUND × $2\frac{3}{4}$″ 345 IN./LBS. | 5 | 2 | $1\frac{1}{4}$ | $2\frac{3}{4}$ | $1\frac{1}{8}$ | $\frac{3}{4}$ | $\frac{1}{2}$ | $\frac{1}{4}$ | $\frac{11}{32}$ |
| 2 | W6x15 | | | | | | | | | | |
| 3 | W8x18 | | | | | | | | | | |
| 4 | W10x22 | $\frac{3}{4}$″ ROUND × $3\frac{1}{2}$″ 555 IN./LBS. | 6 | $2\frac{1}{4}$ | $1\frac{3}{8}$ | $3\frac{1}{2}$ | $1\frac{1}{4}$ | 1 | $\frac{3}{4}$ | $\frac{5}{16}$ | $\frac{13}{32}$ |
| 5 | W10x26 | | | | | | | | | | |
| 6 | W12x26 | | | | | | | | | | |

## POST AND FOOTING DATA TABLE

| POST DES. NO. ✳ | POST: NOM. SIZE (IN.) | WEIGHT LBS/FT | WEIGHT LBS/IN | STUB LENGTH (IN.) | FOOTING: DIA. (IN.) | LEVEL GROUND DEPTH (IN.) | LEVEL GROUND C.Y. | 6:1 GRADE DEPTH (IN.) | 6:1 GRADE C.Y. | 4:1 GRADE DEPTH (IN.) | 4:1 GRADE C.Y. | 3:1 OR 2:1 GRADE DEPTH (IN.) | 3:1 OR 2:1 GRADE C.Y. |
|---|---|---|---|---|---|---|---|---|---|---|---|---|---|
| 1 | W6 | 9.0 | 0.75 | 2′-0″ | 15″ | 3′-0″ | 0.14 | 3′-2″ | 0.15 | 3′-3″ | 0.16 | 3′-6″ | 0.17 |
| 2 | W6 | 15.0 | 1.25 | 2′-6″ | 24″ | 4′-0″ | 0.47 | 4′-2″ | 0.50 | 4′-3″ | 0.51 | 4′-6″ | 0.54 |
| 3 | W8 | 18.0 | 1.50 | 2′-6″ | 28″ | 4′-6″ | 0.71 | 4′-8″ | 0.73 | 4′-9″ | 0.74 | 5′-0″ | 0.78 |
| 4 | W10 | 22.0 | 1.83 | 3′-0″ | 36″ | 5′-0″ | 1.31 | 5′-2″ | 1.36 | 5′-3″ | 1.39 | 5′-6″ | 1.45 |
| 5 | W10 | 26.0 | 2.17 | 3′-0″ | 36″ | 5′-0″ | 1.31 | 5′-3″ | 1.37 | 5′-5″ | 1.43 | 5′-9″ | 1.52 |
| 6 | W12 | 26.0 | 2.17 | 3′-0″ | 36″ | 5′-6″ | 1.44 | 5′-9″ | 1.52 | 5′-11″ | 1.56 | 6′-3″ | 1.65 |

SHEET METAL BOLT RETAINER CUT FROM 30 GAGE GALVANIZED SHEET METAL. PLACE BETWEEN BASE PLATES. SIZE VARIES TO FIT PLATE. BOLT HOLES TO BE $\frac{1}{16}$″ LARGER THAN REQUIRED BOLT SIZE.

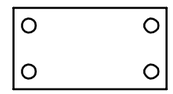

BOLT RETAINER

✳ FOR POST DESIGNS NUMBERS 3, 4, 5 AND 6 HAVING WEIGHTS GREATER THAN 18LBS./FT., POSTS SHALL BE SPACED AT LEAST 7′ APART. FOR POST DESIGNS NUMBERS 1 AND 2, POSTS MAY BE SPACED LESS THAN 7′ APART. DO NOT USE THREE NUMBER 1 OR 2 POSTS WITH A SIGN WIDTH OF LESS THAN 10′-6″.

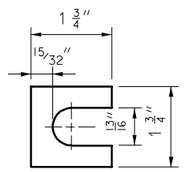


SHIM

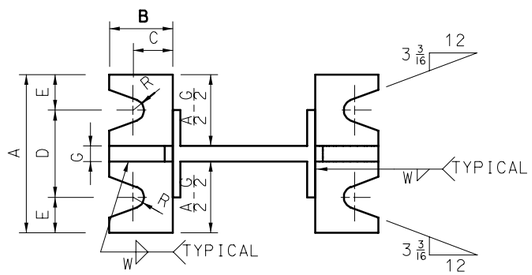


SECTION A-A

SECTION B-B
POST AND FOOTING

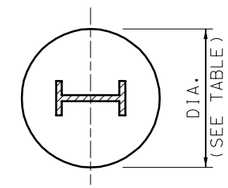


SECTION C-C

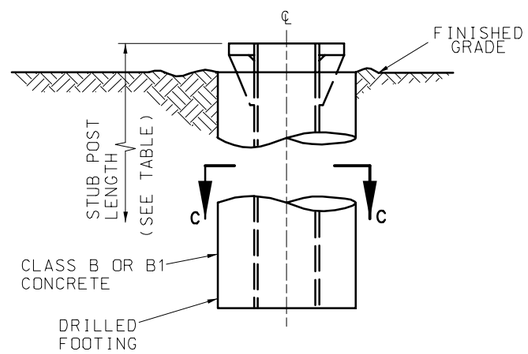


STUB DETAIL

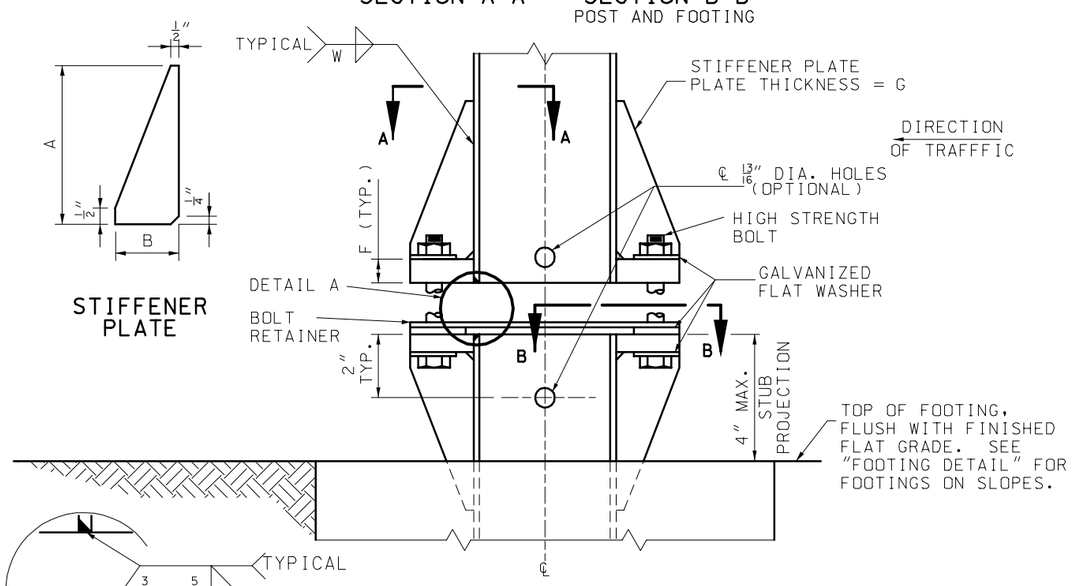


STIFFENER PLATE

ELEVATION

DETAIL A

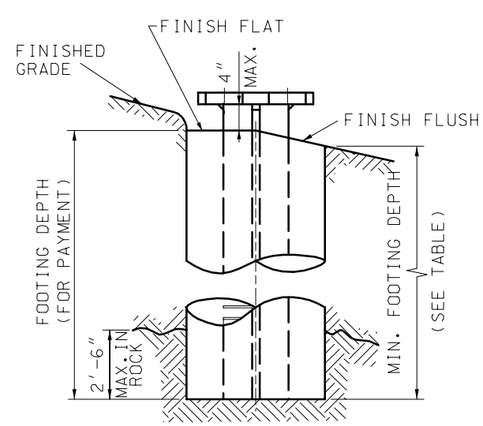


FOOTING DETAIL

GENERAL NOTES:

DESIGN SPECS: AASHTO STANDARD SPECIFICATIONS FOR STRUCTURAL SUPPORTS FOR HIGHWAY SIGNS. LUMINAIRES AND TRAFFIC SIGNALS – 1985.

POSTS TO BE GALVANIZED AFTER FABRICATION.

METAL PROJECTING BEYOND THE PLANE OF THE PLATE FACE WILL NOT BE ALLOWED.

REMOVE ALL GALVANIZING RUNS OR BEADS IN THE WASHER AREA.

ALL STRUCTURAL STEEL STIFFENER PLATES AND BASE PLATES, FOR GROUND MOUNTED SIGNS SHALL MEET THE REQUIREMENTS OF ASTM A 36 OR AASHTO M 223 GRADE 50, OR AASHTO 222, MINIMUM YIELD 50,000 PSI.

IN THE EVENT THE DISTANCE BETWEEN THE TOP OF THE FOOTING AND THE HINGE POINT IS LESS THAN 7′-0″, THE SIGN HEIGHT AND POST LENGTH IS TO BE INCREASED SUFFICIENTLY TO ACCOMMODATE THIS MINIMUM SPACING.

HINGE PLATES NOT REQUIRED ON SINGLE POST SIGNS OR ANY SIGNS USING PIPE POSTS.

NUTS ON HINGE PLATE BOLTS SHALL BE TIGHTENED TO THE REQUIRED MINIMUM BOLT TENSION VALUES SHOWN IN TABLE 1 SEC. 1080 OF THE STANDARD SPECIFICATIONS.

THE NUT SHALL BE FREE RUNNING. IF THE NUT WILL NOT SPIN ON THE BOLT BECAUSE OF GALVANIZING IRREGULARITIES, A LUBRICANT SHALL BE APPLIED.

ALL BREAKAWAY ASSEMBLY BOLTS SHALL BE TIGHTENED IN A SYSTEMATIC MANNER TO THE PRESCRIBED TORQUE SHOWN ON THIS DRAWING.

EACH BREAKAWAY ASSEMBLY BOLT SHALL BE LOOSENED AND RE-TIGHTENED TO THE REQUIRED TORQUE IN THE SAME ORDER AS THE INITIAL TIGHTENING.

THE THREADS SHALL BE BURRED AT THE NUT USING A CENTER PUNCH TO PREVENT NUT FROM LOOSENING.

POST LENGTH QUANTITY SHOWN ON PLANS INCLUDES STUB.

1″ X 2-1/2″ HIGH STRENGTH BOLTS FOR PIPE POSTS SHALL BE OF THE DESIGNATION AASHTO M 164 OR ASTM A 449. ALL OTHER H.S. BOLTS SHALL BE OF THE DESIGNATION AASHTO M 164.

FURNISH TWO .012″± AND TWO .0032″± THICK SHIMS PER POST FROM BRASS SHIM STOCK OR STRIP, DESIGNATION ASTM B 36. SHIM AS REQUIRED TO PLUMB POST.

HIGH STRENGTH BOLTS WITH HEX NUT AND THREE WASHERS WITH EACH BOLT ARE TO BE GALVANIZED.

OPTIONAL HOLES (13/16″ ROUND FOR "I" SHAPE POSTS AND $\frac{9}{16}$″ ROUND FOR PIPE POST BASE PLATES) AS SHOWN IN "ELEVATIONS" ARE TO BE USED AS AID FOR GALVANIZING ONLY.

MISSOURI HIGHWAYS AND TRANSPORTATION COMMISSION

**HIGHWAY SIGNING**

BREAKAWAY ASSEMBLIES FOR GROUND MOUNTED SIGNS

DATE:_____ EFFECTIVE: 07-01-2004 **903.03AY** 1/8

## WIDE FLANGE STRUCTURAL STEEL POSTS DESIGN DATA

| POST DES. NO. | NOM. SIZE (IN.) | WEIGHT LB/FT | WEIGHT LB/IN | DEPTH (IN.) | FLANGE WIDTH (IN.) | FLANGE THICK (IN.) | WEB THICK (IN.) |
|---|---|---|---|---|---|---|---|
| 1 | W6 | 9 | 0.75 | $5\frac{7}{8}$ | 4 | $\frac{3}{16}$ | $\frac{3}{16}$ |
| 2 | W6 | 15 | 1.25 | 6 | 6 | $\frac{1}{4}$ | $\frac{1}{4}$ |
| 3 | W8 | 18 | 1.50 | $8\frac{1}{8}$ | $5\frac{1}{4}$ | $\frac{5}{16}$ | $\frac{1}{4}$ |
| 4 | W10 | 22 | 1.83 | $10\frac{1}{8}$ | $5\frac{3}{4}$ | $\frac{3}{8}$ | $\frac{1}{4}$ |
| 5 | W10 | 26 | 2.17 | $10\frac{3}{8}$ | $5\frac{3}{4}$ | $\frac{7}{16}$ | $\frac{1}{4}$ |
| 6 | W12 | 26 | 2.17 | $12\frac{1}{4}$ | $6\frac{1}{2}$ | $\frac{3}{8}$ | $\frac{1}{4}$ |

THE WEIGHT OF STRUCTURAL STEEL POSTS SHOWN IN THE CONTRACT HAS BEEN COMPUTED USING THE WEIGHTS SHOWN.

## HINGE PLATE DATA TABLE

| POST DESIGN NO. | F (IN.) | G (IN.) | H (IN.) | J (IN.) | K (IN.) | L (IN.) | M (IN.) | N (IN.) | d1 (IN.) | d2 (IN.) | P (IN.) | BOLT DIA. (IN.) | WT. (EA.) (LBS.) |
|---|---|---|---|---|---|---|---|---|---|---|---|---|---|
| 1 | $4\frac{1}{4}$ | 1 | $1\frac{1}{8}$ | 4 | $2\frac{1}{4}$ | $\frac{7}{8}$ | 1 | $\frac{1}{2}$ | $\frac{9}{16}$ | $\frac{3}{4}$ | $\frac{3}{16}$ | $\frac{1}{2}$ | 0.76 |
| 2 | 5 | $1\frac{1}{4}$ | $1\frac{1}{4}$ | 6 | $3\frac{1}{2}$ | $1\frac{1}{4}$ | $1\frac{1}{2}$ | $\frac{3}{4}$ | $\frac{11}{16}$ | $1\frac{1}{4}$ | $\frac{1}{4}$ | $\frac{5}{8}$ | 1.67 |
| 3 | 5 | $1\frac{1}{4}$ | $1\frac{1}{4}$ | $5\frac{1}{4}$ | $2\frac{3}{4}$ | $1\frac{1}{4}$ | $1\frac{1}{4}$ | $\frac{3}{4}$ | $\frac{11}{16}$ | $1\frac{1}{16}$ | $\frac{1}{4}$ | $\frac{5}{8}$ | 1.51 |
| 4 | 6 | $1\frac{1}{2}$ | $1\frac{1}{2}$ | $5\frac{3}{4}$ | $2\frac{3}{4}$ | $1\frac{1}{2}$ | $1\frac{3}{8}$ | $\frac{13}{16}$ | $\frac{13}{16}$ | $1\frac{1}{8}$ | $\frac{5}{16}$ | $\frac{3}{4}$ | 2.52 |
| 5 | 6 | $1\frac{1}{2}$ | $1\frac{1}{2}$ | $5\frac{3}{4}$ | $2\frac{3}{4}$ | $1\frac{1}{2}$ | $1\frac{3}{8}$ | $\frac{13}{16}$ | $\frac{13}{16}$ | $1\frac{1}{8}$ | $\frac{5}{16}$ | $\frac{3}{4}$ | 2.52 |
| 6 | 6 | $1\frac{1}{2}$ | $1\frac{1}{2}$ | $6\frac{1}{2}$ | $3\frac{1}{2}$ | $1\frac{1}{2}$ | $1\frac{5}{8}$ | $\frac{13}{16}$ | $\frac{13}{16}$ | $1\frac{5}{16}$ | $\frac{5}{16}$ | $\frac{3}{4}$ | 2.79 |

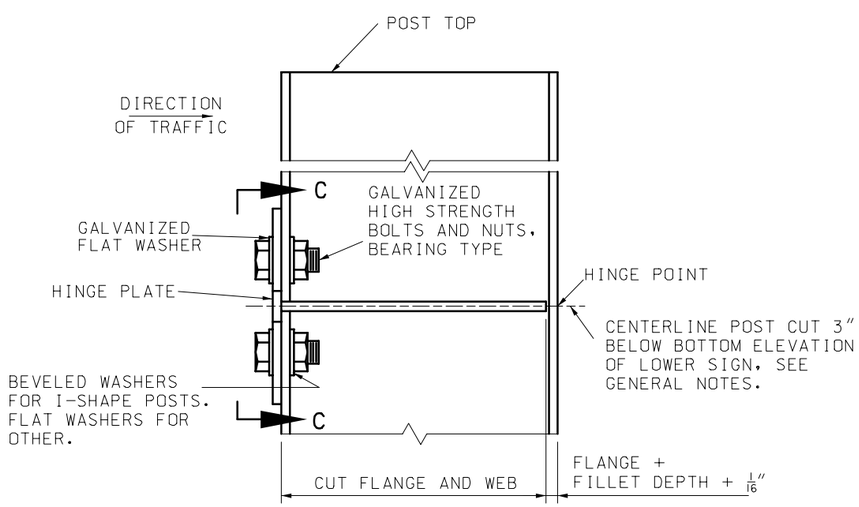


ELEVATION

**HINGE PLATE DETAIL**

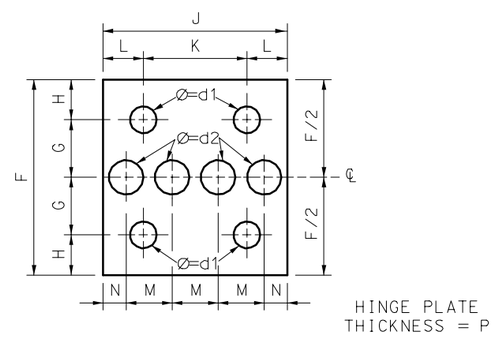


ALL HOLES SHALL BE DRILLED. ALL PLATE CUTS SHALL PREFERABLY BE SAW CUTS. HOWEVER: FLAME CUTTING WILL BE PERMITTED PROVIDED ALL EDGES ARE GROUND.

HINGE PLATE SHALL BE FABRICATED FROM ASTM A 36 STRUCTURAL STEEL.

ELEVATION C-C

MISSOURI HIGHWAYS AND TRANSPORTATION COMMISSION

**HIGHWAY SIGNING**

BREAKAWAY ASSEMBLIES FOR GROUND MOUNTED SIGNS

DATE:_____ EFFECTIVE: 07-01-2004 **903.03AY** 2/8

4″ X 4″ WOOD POST – NO SLOTS OR HOLES REQUIRED

4″ X 6″ WOOD POST – $1\frac{1}{2}$″ X $\frac{1}{2}$″ SLOT ON 6″ SIDE OR $1\frac{1}{2}$″ DIA. HOLE ON 6″ SIDE

6″ X 6″ WOOD POST – 2″ X $\frac{1}{2}$″ SLOT OR 2″ DIA. HOLE

SLOT ACROSS NEUTRAL AXIS FORMED BY SUCCESSIVE DRILLING WITH $\frac{1}{2}$″ BIT.

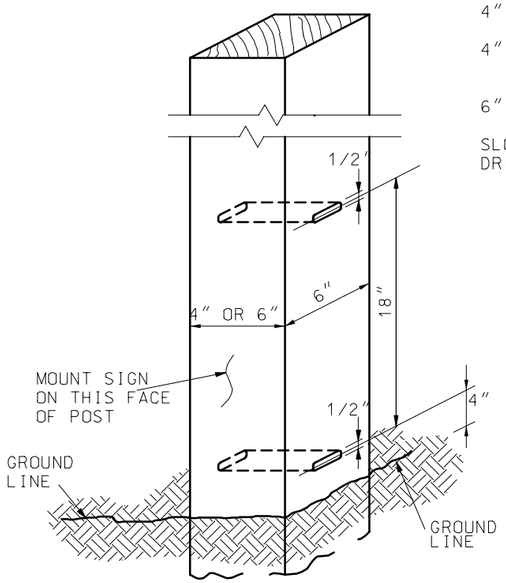


## WOOD POST DETAIL

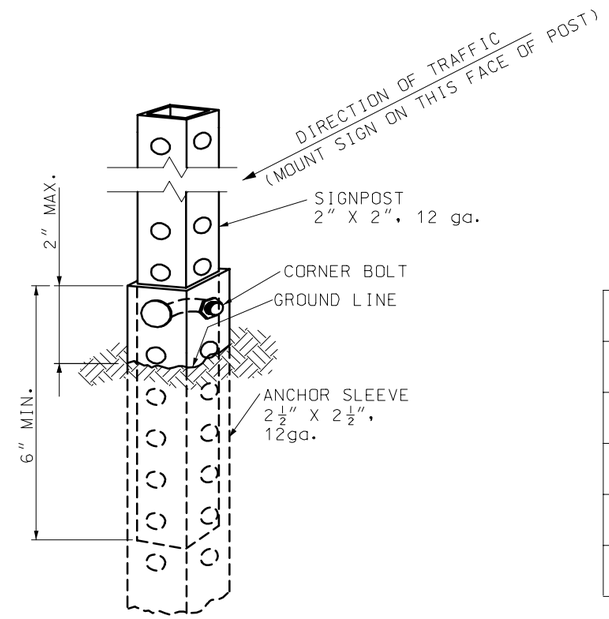


THE SIGNPOST IS ATTACHED TO THE ANCHOR SLEEVE WITH THE CORNER BOLT PER MANUFACTURER'S SPECIFICATION.

## PERFORATED SQUARE STEEL TUBE POST DETAIL

| | POST TYPE | | |
|---|---|---|---|
| SIGN AREA (SQ.FT.) | U-CHANNEL | WOOD | PERF. SQUARE STEEL TUBING |
| ≤ 10 | 1 – 3.0 LB./FT.* | 1 – 4″ X 4″* | 1 – 2″ 12 GA.* |
| > 10 ≤ 16 | 2 – 3.0 LB./FT. | 2 – 4″ X 4″<br>1 – 4″ X 6″* | 2 – 2″ 12 GA. |
| > 16 ≤ 24 | 2 – 3.0 LB./FT. | 2 – 4″ X 6″ | 3 – 2″ 12 GA.** |
| > 24 ≤ 30 | 3 – 3.0 LB./FT. | 2 – 4″ X 6″ | N/A |
| > 30 ≤ 50 | N/A | 2 – 6″ X 6″ | N/A |

* SIGNS GREATER THAN 4 FEET IN WIDTH, EXCEPT DIAMOND SHAPE SIGNS, REQUIRE TWO POSTS.

** REQUIRES SLIP BASE PER MANUFACTURER'S RECOMMENDATION.

## POST SIZE REQUIREMENTS

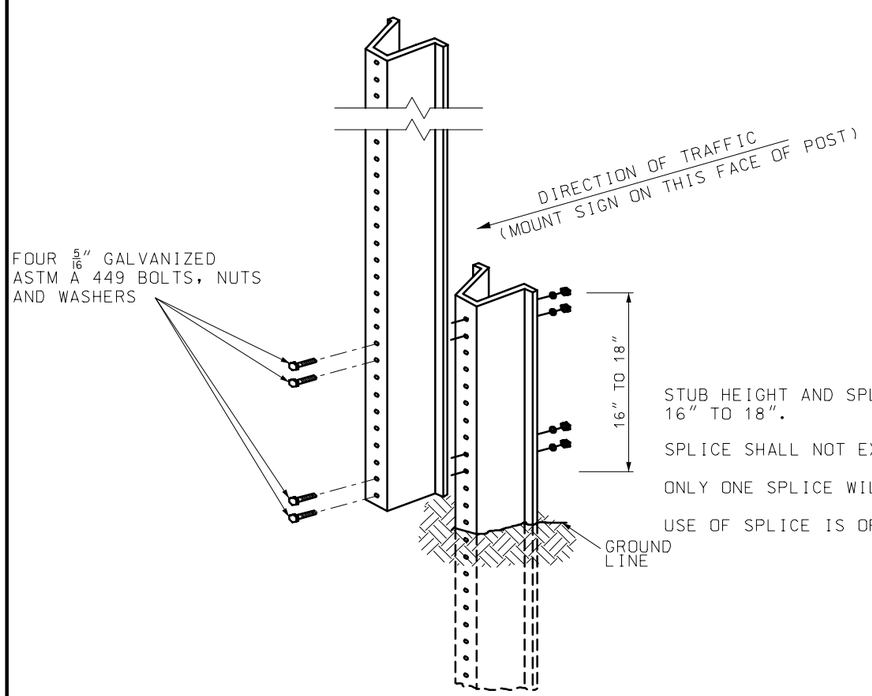


STUB HEIGHT AND SPLICE LAP SHALL BE 16″ TO 18″.

SPLICE SHALL NOT EXTEND BELOW THE GROUND.

ONLY ONE SPLICE WILL BE ALLOWED PER POST.

USE OF SPLICE IS OPTIONAL.

## U-CHANNEL POST DETAIL

GENERAL NOTES:

ALL POSTS SHALL BE EMBEDDED A MINIMUM OF 3 FEET.

MISSOURI HIGHWAYS AND TRANSPORTATION COMMISSION

**HIGHWAY SIGNING**
POST MOUNTING DETAILS

DATE:_____ EFFECTIVE: 07-01-2004 **903.03AY** 3/8

## ROUND PIPE POST FOR GROUND MOUNTED SIGNS

| NOMINAL PIPE SIZE (IN.) | BOLT DATA | | | BASE CONNECTION DATA TABLE (IN.) | | | | | |
|---|---|---|---|---|---|---|---|---|---|
| | SIZE (IN.) | LENGTH (IN.) | TORQUE IN.-LB | A | B | C | R | T | W |
| $2\frac{1}{2}$ & 3 | $\frac{1}{2}$ | $3\frac{1}{2}$ | 140 | $6\frac{1}{4}$ | 9 | $\frac{1}{4}$ | $\frac{9}{32}$ | 1 | $\frac{1}{4}$ |
| 4 | $\frac{5}{8}$ | $3\frac{3}{4}$ | 345 | $7\frac{3}{16}$ | 10 | $\frac{1}{4}$ | $\frac{3}{8}$ | 1 | $\frac{5}{16}$ |

## ROUND PIPE POST AND FOOTING DATA TABLE

| NOM. SIZE (IN.) | WEIGHT | | STUB LENGTH | FOOTING | | CONCRETE | |
|---|---|---|---|---|---|---|---|
| | LBS/FT | LBS/IN | | DIA. | MIN. DEPTH | CY/FT | CY/IN |
| $2\frac{1}{2}$ | 5.79 | 0.48 | $3'-3\frac{1}{2}''$ | 12″ | 3′-6″ | 0.029 | 0.002 |
| 3 | 7.58 | 0.63 | $4'-3\frac{1}{2}''$ | 12″ | 4′-6″ | 0.029 | 0.002 |
| 4 | 10.79 | 0.90 | $5'-3\frac{1}{2}''$ | 18″ | 5′-6″ | 0.065 | 0.005 |

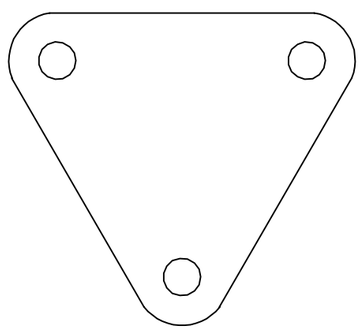

BOLT RETAINER

SHEET METAL BOLT RETAINER CUT FROM 30 GUAGE GALVANIZED SHEET METAL. PLACE BETWEEN BASE PLATES. SIZE VARIES TO FIT PLATE. BOLT HOLES SHALL BE $\frac{1}{16}''$ LARGER THAN REQUIRED BOLT SIZE.

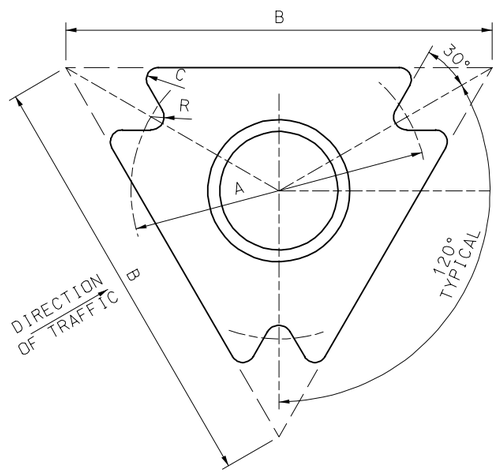


PLAN VIEW

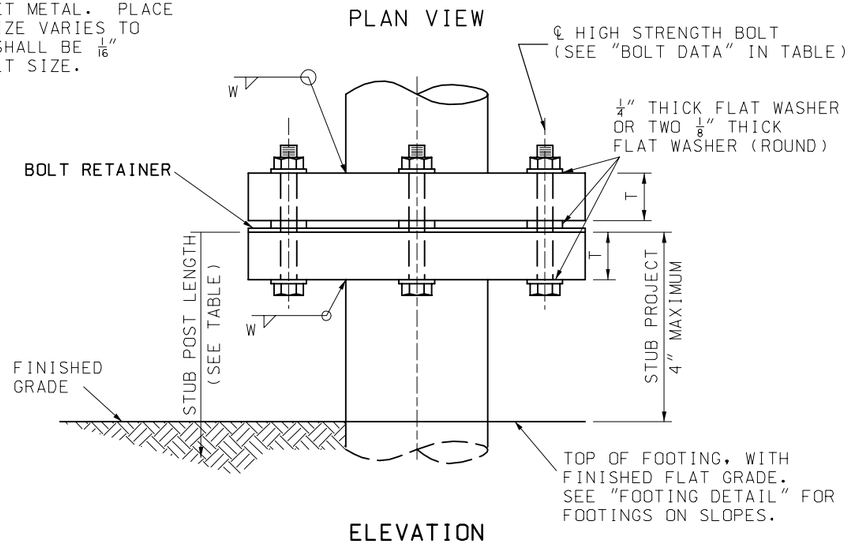


ELEVATION
(STEEL PIPE POST BASE CONNECTION)

## MULTI-DIRECTION SLIP BASE

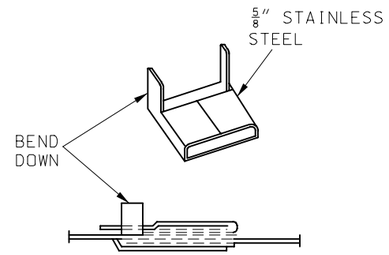


VIEW SHOWING ENDS OF STRAP, CLAMPED IN SEAL

STRAP SEAL

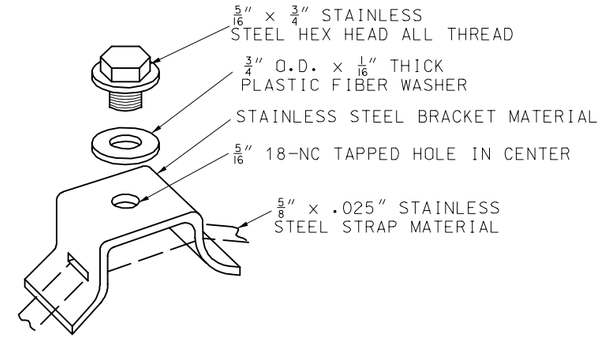


## FLARED LEG SIGN BRACKET

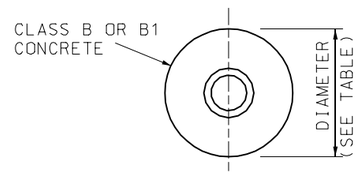


SECTION C-C

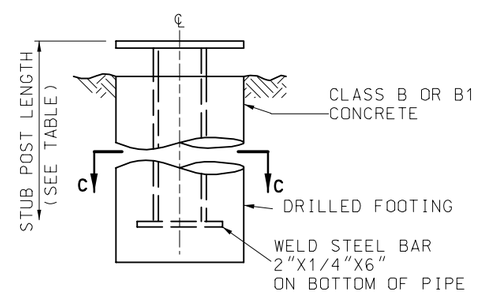


## FOUNDATION DETAIL
SLIP BASE ASSEMBLIES

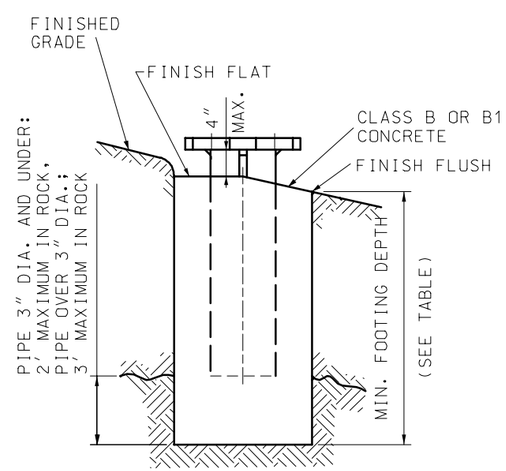


## FOOTING DETAIL

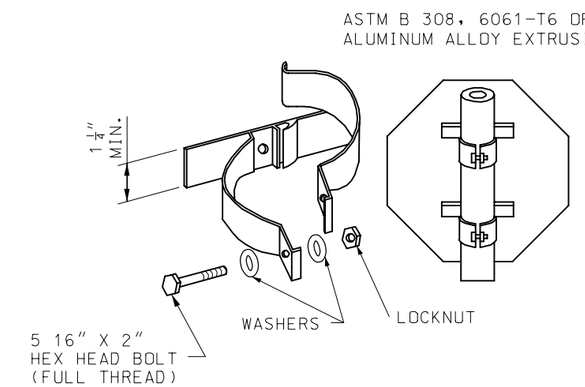


STAINLESS STEEL HARDWARE

## CLAMP TYPE SIGN SUPPORTS FOR PIPE POST

ROLLED CRIMP TO ENGAGE PIPE O.D.

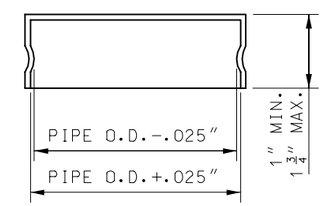


FRICTION CAP

MISSOURI HIGHWAYS AND TRANSPORTATION COMMISSION

## HIGHWAY SIGNING
POST FOR SIGNS
30 SQUARE FEET
OR SMALLER

DATE:_____ | EFFECTIVE: 07-01-2004 | 903.03AY | 4/8

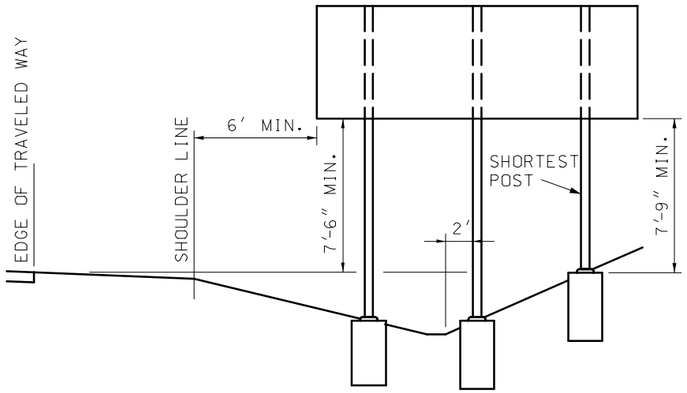


## DITCH SECTION

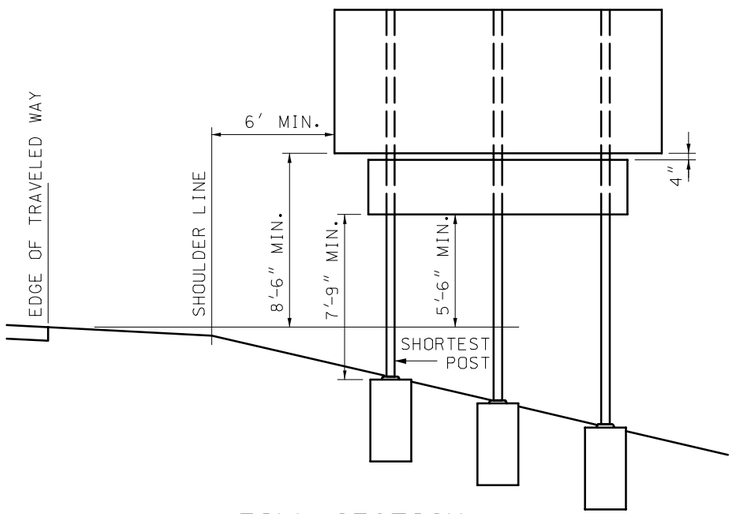


## FILL SECTION

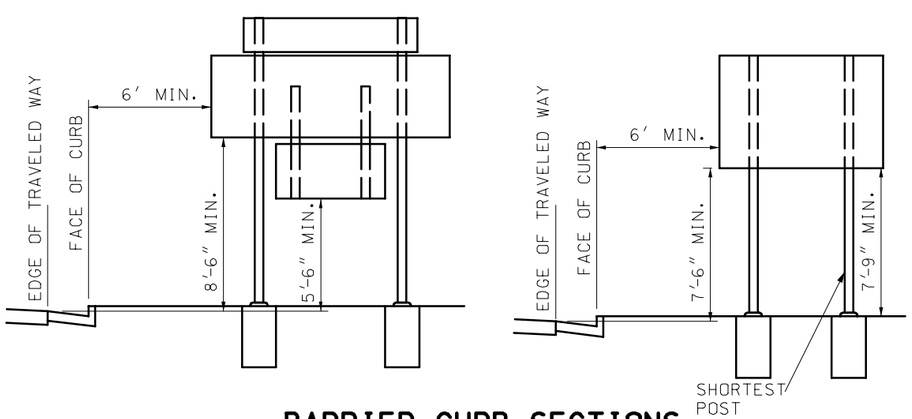


## BARRIER CURB SECTIONS

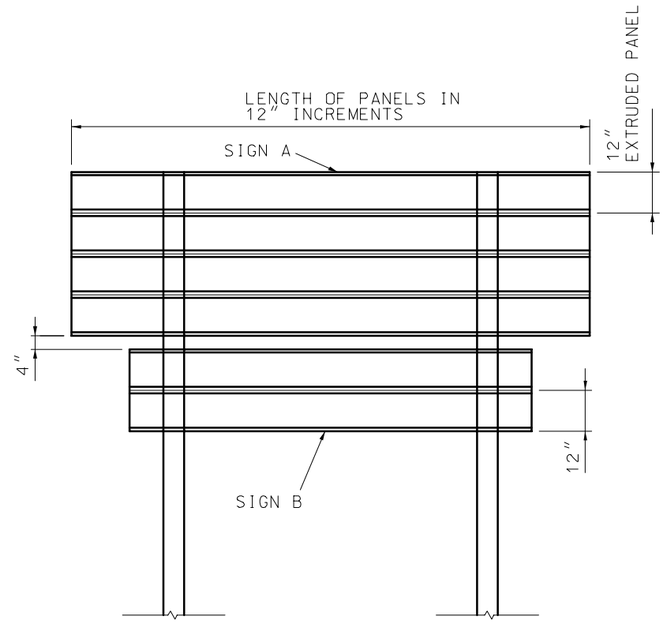


SIGN B MAY BE MOUNTED ABOVE OR BELOW SIGN A AS REQUIRED.

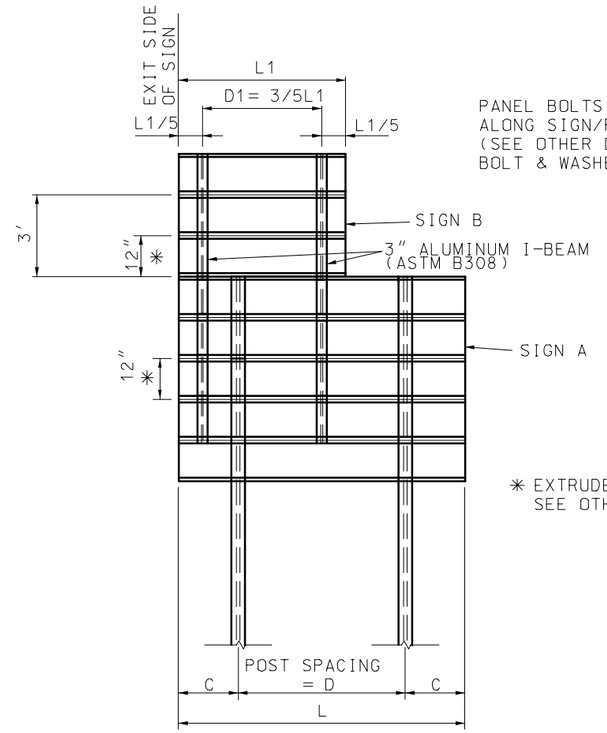


PANEL BOLTS SPACED 24″ O.C. ALONG SIGN/PANEL INTERFACE. (SEE OTHER DRAWING FOR BOLT & WASHER DETAILS.)

✳ EXTRUDED ALUMINUM PANEL. SEE OTHER DRAWINGS.

USE THIS DETAIL FOR EXIT NUMBER PANELS MOUNTED ON GUIDE SIGNS.

## SIGN AND PANEL SPACING

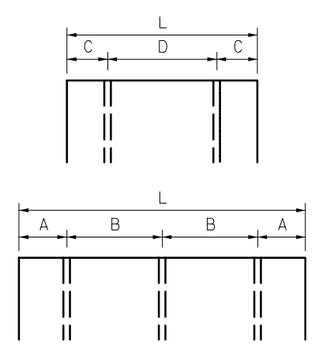


A = 1/6 LC = 1/5 L
B = 1/3 LD = 3/5 L

## POST SPACING

FOR L OF 6′ TO 17′ USE 2 POSTS.
FOR L GREATER THAN 17′ USE 3 POSTS.
FOR L LESS THAN 17′, 3 POSTS MAY BE USED DEPENDING ON SOIL CONDITIONS.

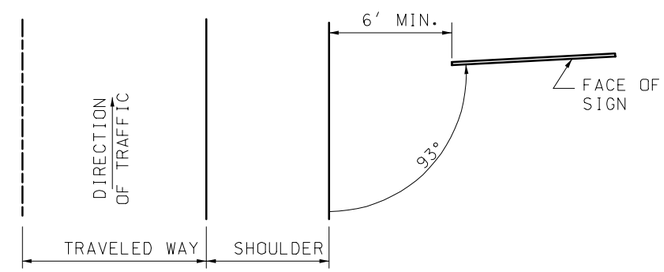


## LOCATION SKETCH

MISSOURI HIGHWAYS AND TRANSPORTATION COMMISSION

# HIGHWAY SIGNING

TYPICAL SECTION AND POST SPACING

DATE:_____ | EFFECTIVE: 07-01-2004 | 903.03AY | 5/8

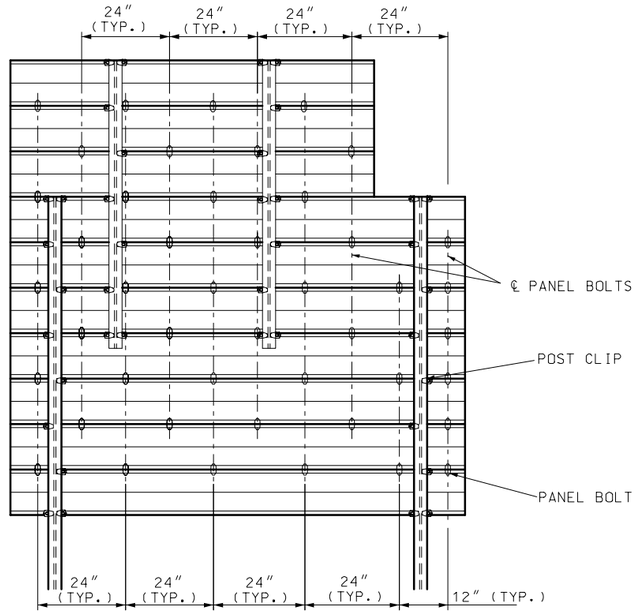


## PANEL BOLT LOCATION

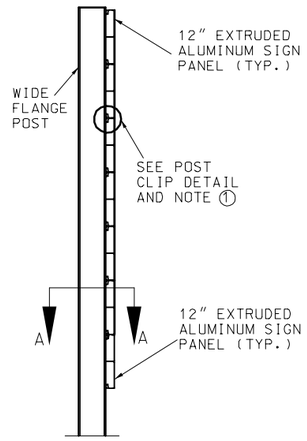


END ELEVATION

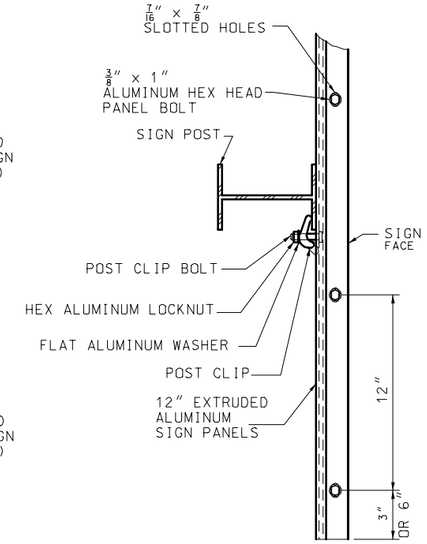


SECTION A–A

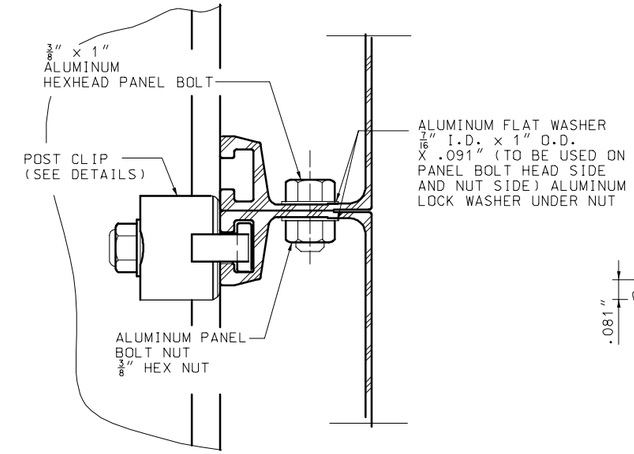


## POST CLIP DETAIL

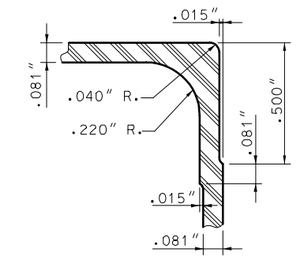


DETAIL "C"

① SIGNS SHALL BE FIELD ATTACHED TO POSTS WITH POST CLIPS AND BOLTS, SEE POST CLIP DETAIL. THE SHANK OF THE POST CLIP BOLT SHALL FIT TIGHTLY AGAINST THE POST FLANGE AFTER THE LOCKNUTS ARE TORQUED. LOCKNUTS ON THE POST CLIP BOLTS SHALL BE TORQUED TO 225 INCH-POUNDS WHEN USING DRY, CLEAN, UNLUBRICATED THREADS.

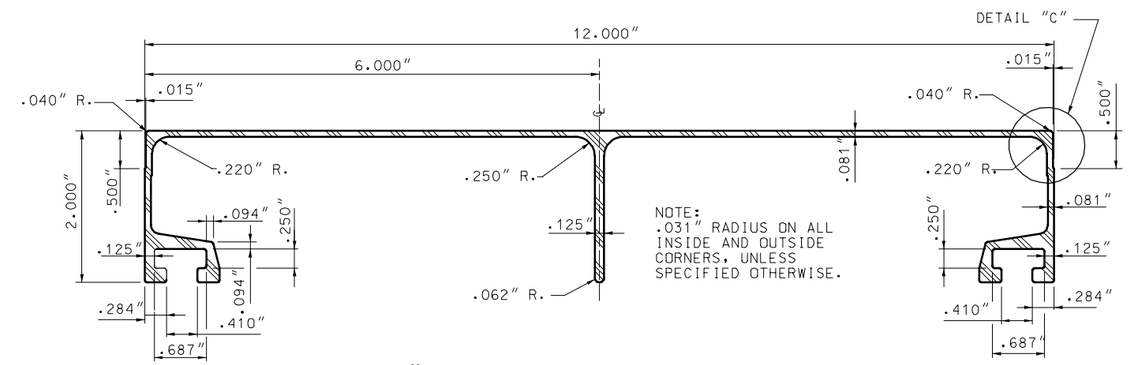


## 12″ EXTRUDED ALUMINUM PANEL

MINIMUM WT. = 2.40 LBS./FT.

NOTE:
MINIMUM WEIGHT AND THICKNESS DIMENSIONS SHOWN.
HEAVIER PANELS MAY BE USED.

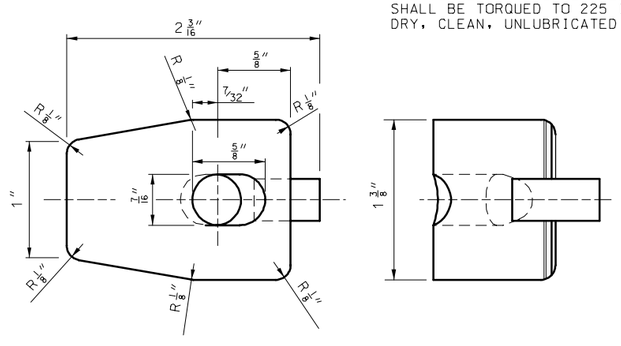


PLAN VIEW

END VIEW

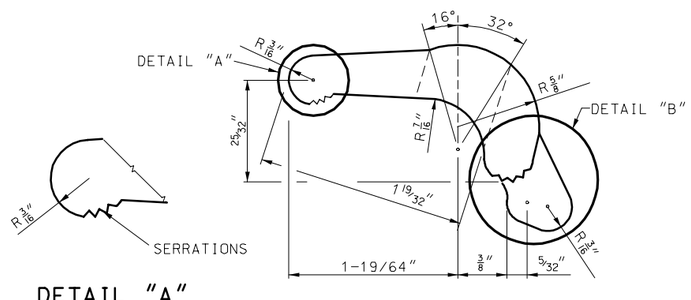


DETAIL "A"
ENLARGED VIEW OF SERRATIONS

ELEVATION VIEW

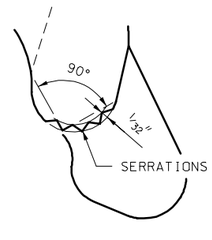


DETAIL "B"
ENLARGED DETAIL OF SERRATIONS
SAW GATING AS SHOWN
(APPROXIMATELY FLAT PERMISSABLE)

## POST CLIP

POST CLIPS SHALL BE ASTM B 108, 356-T6 ALUMINUM ALLOY.

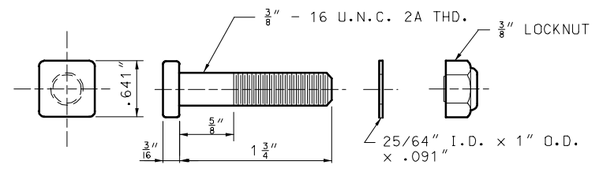


## POST CLIP BOLT WITH FLAT WASHER AND LOCKNUT

NOTE: SQUARE BOLT HEAD SHOWN. RECTANGULAR BOLT HEAD WITH LEAST DIMENSION OF .641″ MAY BE USED.

BOLT – 1 3/4 × 3/8 ALUMINUM
HEX LOCKNUT – 3/8″ ALUMINUM
WASHER – ALUMINUM

MISSOURI HIGHWAYS AND TRANSPORTATION COMMISSION

# HIGHWAY SIGNING

EXTRUDED ALUMINUM PANEL DETAILS

DATE:_____ | EFFECTIVE: 07-01-2004 | 903.03AY | 6/8

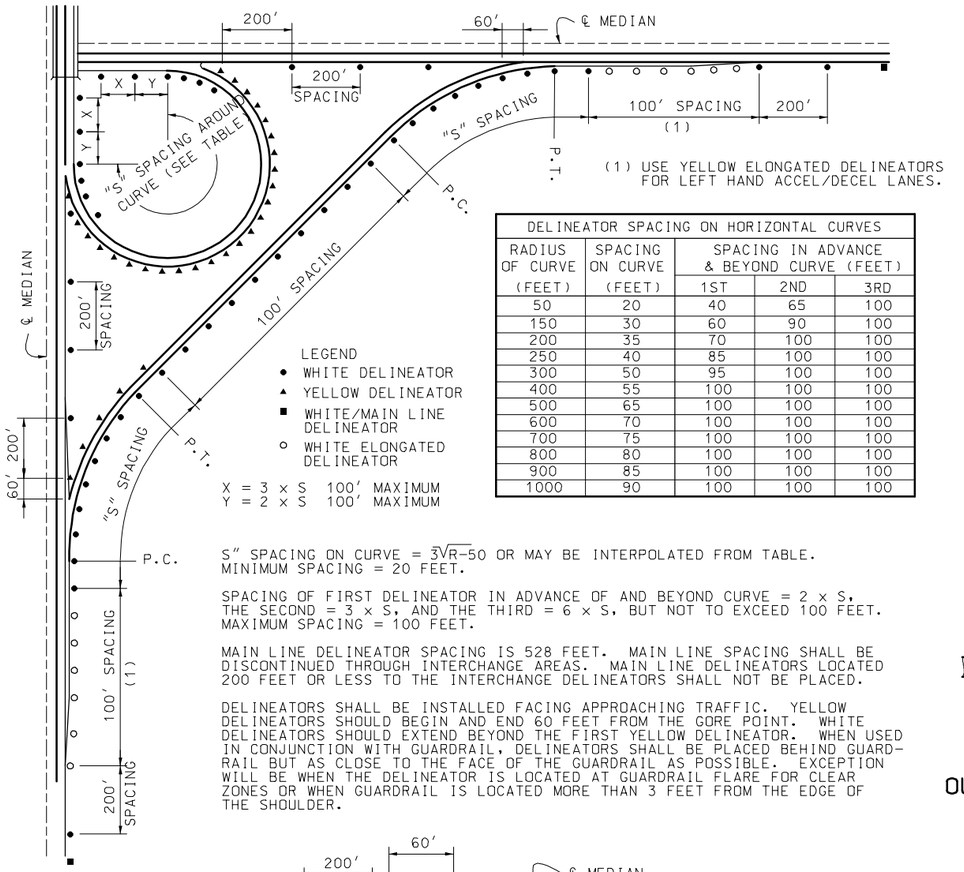


(1) USE YELLOW ELONGATED DELINEATORS FOR LEFT HAND ACCEL/DECEL LANES.

LEGEND
- ● WHITE DELINEATOR
- ▲ YELLOW DELINEATOR
- ■ WHITE/MAIN LINE DELINEATOR
- ○ WHITE ELONGATED DELINEATOR

X = 3 x S 100′ MAXIMUM
Y = 2 x S 100′ MAXIMUM

| DELINEATOR SPACING ON HORIZONTAL CURVES | | | | |
|---|---|---|---|---|
| RADIUS OF CURVE (FEET) | SPACING ON CURVE (FEET) | SPACING IN ADVANCE & BEYOND CURVE (FEET) | | |
| | | 1ST | 2ND | 3RD |
| 50 | 20 | 40 | 65 | 100 |
| 150 | 30 | 60 | 90 | 100 |
| 200 | 35 | 70 | 100 | 100 |
| 250 | 40 | 85 | 100 | 100 |
| 300 | 50 | 95 | 100 | 100 |
| 400 | 55 | 100 | 100 | 100 |
| 500 | 65 | 100 | 100 | 100 |
| 600 | 70 | 100 | 100 | 100 |
| 700 | 75 | 100 | 100 | 100 |
| 800 | 80 | 100 | 100 | 100 |
| 900 | 85 | 100 | 100 | 100 |
| 1000 | 90 | 100 | 100 | 100 |

S″ SPACING ON CURVE = $\sqrt[3]{R-50}$ OR MAY BE INTERPOLATED FROM TABLE. MINIMUM SPACING = 20 FEET.

SPACING OF FIRST DELINEATOR IN ADVANCE OF AND BEYOND CURVE = 2 x S, THE SECOND = 3 x S, AND THE THIRD = 6 x S, BUT NOT TO EXCEED 100 FEET. MAXIMUM SPACING = 100 FEET.

MAIN LINE DELINEATOR SPACING IS 528 FEET. MAIN LINE SPACING SHALL BE DISCONTINUED THROUGH INTERCHANGE AREAS. MAIN LINE DELINEATORS LOCATED 200 FEET OR LESS TO THE INTERCHANGE DELINEATORS SHALL NOT BE PLACED.

DELINEATORS SHALL BE INSTALLED FACING APPROACHING TRAFFIC. YELLOW DELINEATORS SHOULD BEGIN AND END 60 FEET FROM THE GORE POINT. WHITE DELINEATORS SHOULD EXTEND BEYOND THE FIRST YELLOW DELINEATOR. WHEN USED IN CONJUNCTION WITH GUARDRAIL, DELINEATORS SHALL BE PLACED BEHIND GUARDRAIL BUT AS CLOSE TO THE FACE OF THE GUARDRAIL AS POSSIBLE. EXCEPTION WILL BE WHEN THE DELINEATOR IS LOCATED AT GUARDRAIL FLARE FOR CLEAR ZONES OR WHEN GUARDRAIL IS LOCATED MORE THAN 3 FEET FROM THE EDGE OF THE SHOULDER.

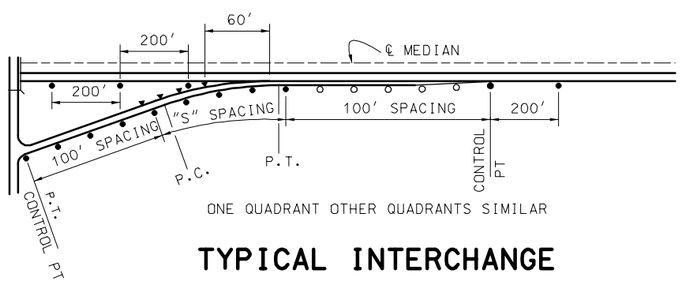


## TYPICAL INTERCHANGE

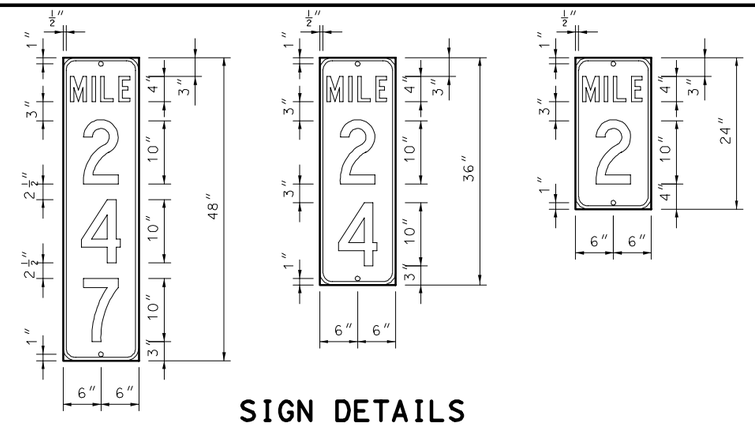


## SIGN DETAILS

| GENERAL SIGN DATA | | | | |
|---|---|---|---|---|
| SHR2L-1✳ SHR2L-3 | TYPE | REFLECTIVE SHEETING TYPE | COLOR | LETTER SERIES |
| BACKGROUND | L-1✳ OR L-3 | R2 | GREEN | |
| LEGEND | L-1✳ OR L-3 | R4✳✳ | WHITE | C |
| SYMBOLS | | | | |
| BORDER | L-1✳ OR L-3 | R4✳✳ | WHITE | |
| SUBSTRATE | SHEET | | | |

✳ REVERSE SCREENED.
✳✳ IF L-3 IS USED.

LEGEND, SYMBOLS & BORDER

L-1 SCREEN PRINT, REVERSE SCREEN PRINT, OR OPAQUE OR TRANSLUCENT CUTABLE FILMS AS APPROVED BY ENGINEER BASED ON SIGN COLOR COMBINATION.

L-3 DIRECT APPLIED (CUT FROM MATERIAL SHOWN ON PLANS.)

BACKGROUND REFLECTIVE SHEETING

R2 REFER TO MISSOURI SPECIFICATION SECTION 1042 TYPE 3
R4 REFER TO MISSOURI SPECIFICATION SECTION 1042 TYPE 7

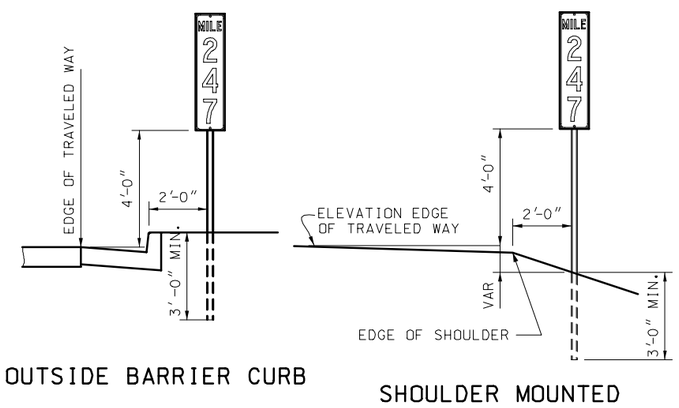


OUTSIDE BARRIER CURB

SHOULDER MOUNTED

## MOUNTING DETAIL MILE MARKER

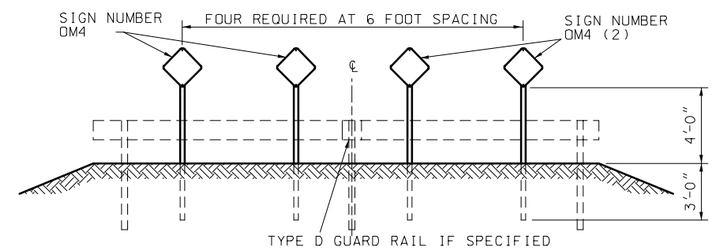


MOUNTING DETAILS
(END OF ROAD OR STREET)

## TYPE 4 OBJECT MARKER SIGN OM4

(2) RED MODOT TYPE 7 REFLECTIVE SHEETING ON 0.080 SHEET ALUMINUM.

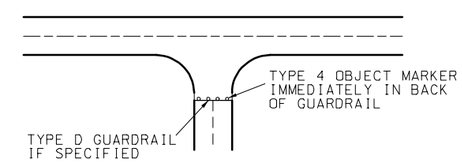


## TYPICAL ROAD CLOSED

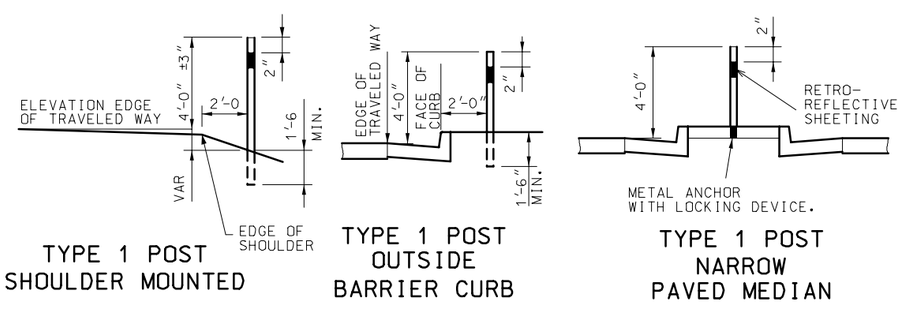


TYPE 1 POST SHOULDER MOUNTED

TYPE 1 POST OUTSIDE BARRIER CURB

TYPE 1 POST NARROW PAVED MEDIAN

## FLEXIBLE DELINEATOR MOUNTING

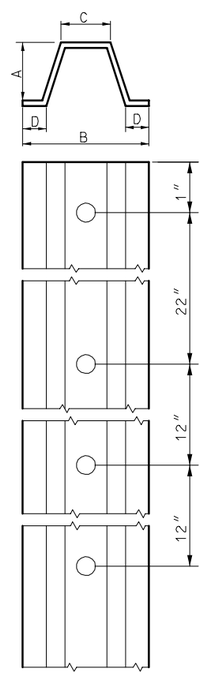


HOLE PUNCHING SHOWN IS THE MINIMUM NUMBER AND SPACING ALLOWED. THE MAXIMUM HOLE PUNCHING ALLOWED IS 9/16″ INCH DIAMETER HOLES, ONE INCH CENTER TO CENTER, BEGINNING ONE INCH FROM THE END AND CONTINUING THE ENTIRE LENGTH OF THE POST.

VANDAL PROOF BOLT AS APPROVED BY THE ENGINEER.

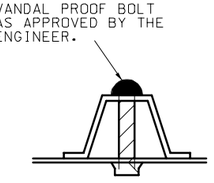

| STEEL MILE & OBJECT MARKER POST | | | | | |
|---|---|---|---|---|---|
| LIMITS | LBS/FT (3) | DIMENSIONS - INCHES | | | |
| | | A | B | C | D |
| MIN. | 1.80 | 1-1/4 | 2-1/2 | 31/32 | 15/32 |
| MAX. | 2.25 | 1-5/8 | 3-1/4 | 1-1/4 | 23/32 |

(3) WEIGHT BEFORE GALVANIZING OR PUNCHING. LIMITS SHOWN ARE ABSOLUTE. NO FURTHER WEIGHT, DIMENSIONAL OR COMMERCIAL TOLERANCE WILL BE ACCEPTABLE.

## MILE AND OBJECT MARKER POST AND FASTENER DETAILS

GENERAL NOTES:

THE CONTRACT UNIT PRICE FOR EACH MILE MARKER AND TYPE 4 OBJECT MARKER SHALL INCLUDE SIGN PANEL, REFLECTIVE SHEETING, AND POST, REGARDLESS OF LENGTH.

MISSOURI HIGHWAYS AND TRANSPORTATION COMMISSION

# HIGHWAY SIGNING
DELINEATORS, MILE MARKERS AND OBJECT MARKERS

DATE:_____ | EFFECTIVE: 07-01-2004 | 903.03AY | 7/8

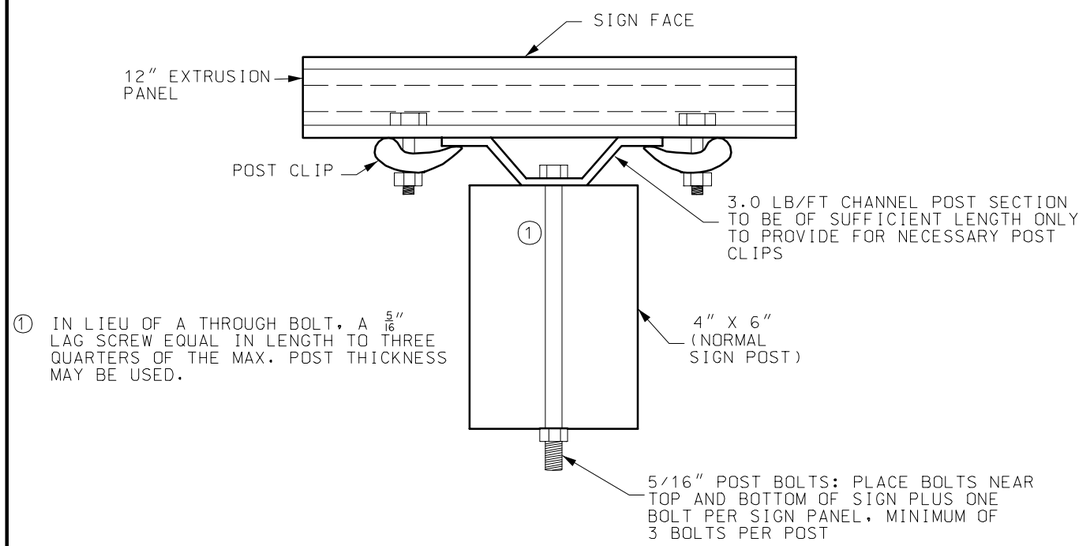


PLAN VIEW

## MOUNTING DETAILS FOR EXTRUDED PANELS ON WOOD 4" X 6" POST

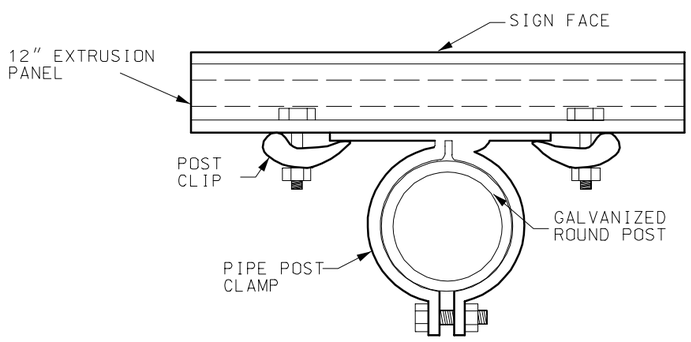


PLAN VIEW

## MOUNTING DETAILS FOR EXTRUDED PANELS ON ROUND PIPE POST

| NUMBER OF BOLTS TO ATTACH STEEL CHANNEL TO WOOD POST | |
|---|---|
| SIGN HEIGHT | NO. OF BOLTS* PER WOOD POST USED |
| 1' | 2 |
| 2' | 3 |
| 3' | 4 |
| 4' | 5 |
| 5' | 6 |
| 6' | 7 |
| 7' | 8 |
| *LAG SCREWS MAY BE SUBSTITUTED | |

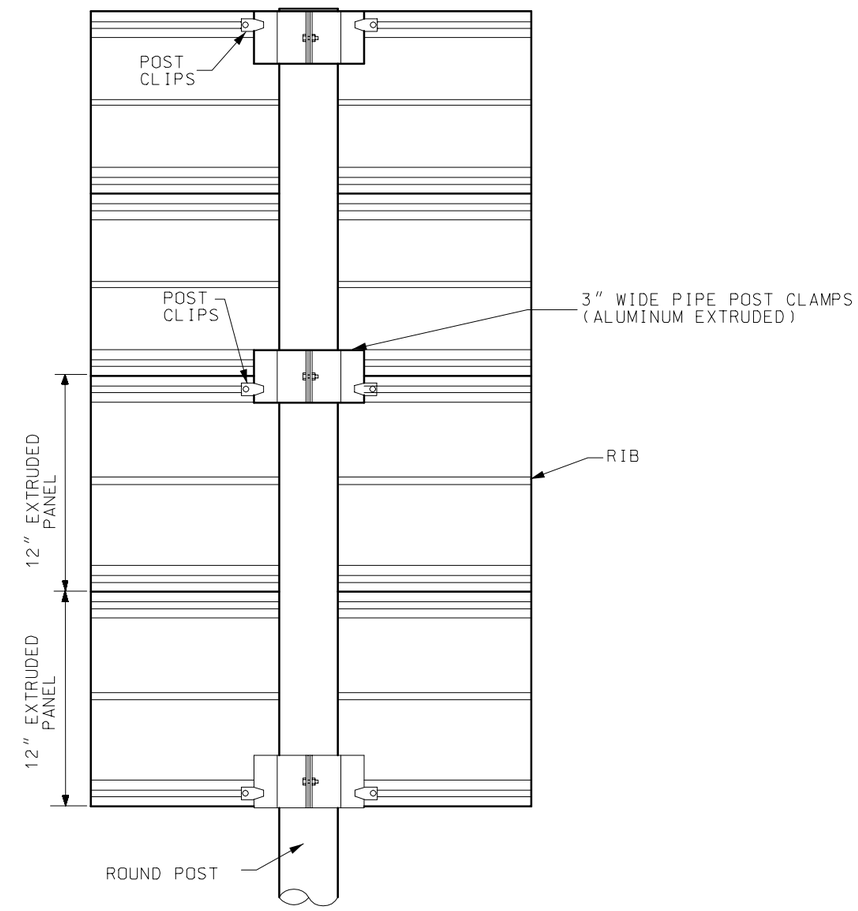


## TYPICAL POST CLIP MOUNTING DETAILS FOR ROUND PIPE POSTS

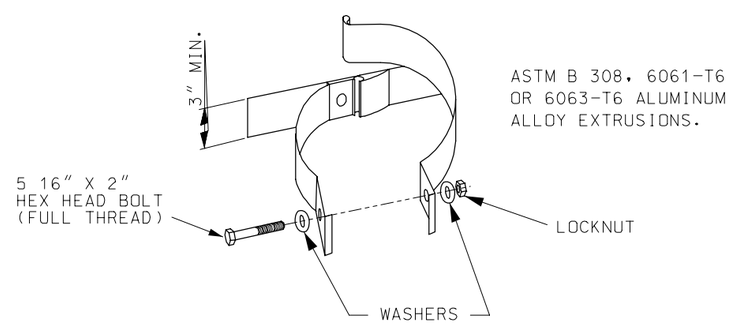


STAINLESS STEEL HARDWARE

## CLAMP TYPE SIGN SUPPORT FOR PIPE POST

MISSOURI HIGHWAYS AND TRANSPORTATION COMMISSION

**HIGHWAY SIGNING**
EXTRUDED PANEL ATTACHMENTS FOR SIGNS 30 SQ. FT. OR SMALLER

DATE:_____ | EFFECTIVE: 07-01-2004 | **903.03AY** | 8/8