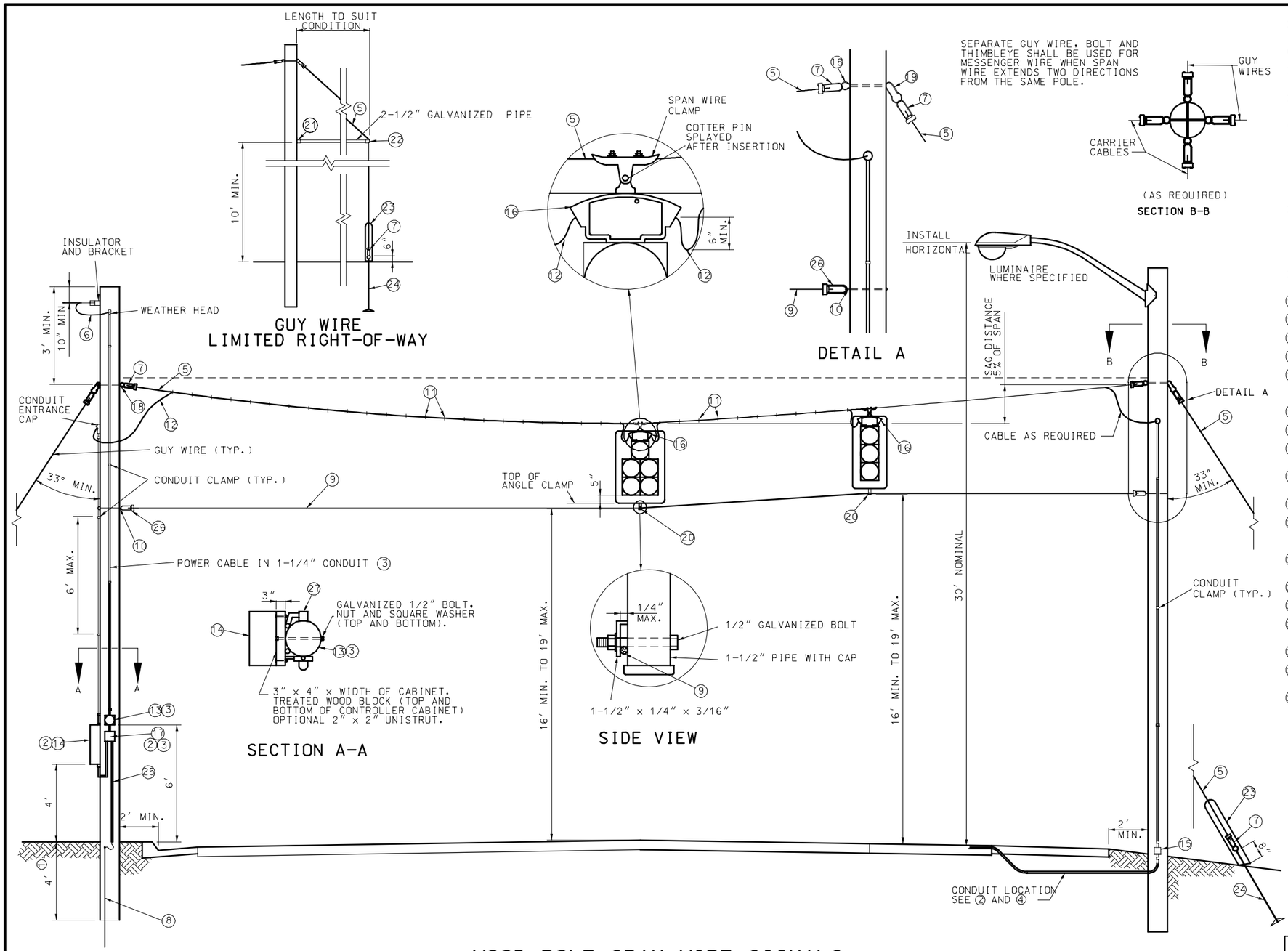

WOOD POLE SPAN WIRE SIGNALS

1. INCREASE EMBEDMENT 1' FOR EACH 5' INCREMENT IN POLE LENGTH OVER 20'.
2. ITEMS ARE INSTALLED AS REQUIRED (SEE PLANS).
3. ITEMS ARE INSTALLED IF THE POLE IS USED AS A POWER SUPPLY (SEE GENERAL NOTES).
4. THREE OR MORE ENTERING CONDUITS WILL REQUIRE A PULL BOX OR OTHER APPROVED FITTING.
5. DOUBLE GALVANIZED 3/8" STEEL GUY WIRE - 7 STRAND HIGH STRENGTH GRADE.
6. SERVICE WIRE AND SPLIT-BOLT OR SLEEVE CONNECTION BY UTILITY COMPANY. WIRE SPACING AS REQUIRED BY THE UTILITY COMPANY.
7. 3/8" AUTOMATIC JAW-TYPE CABLE FITTING WITH SHORT BAIL, 3,860 LBS. MINIMUM HOLDING STRENGTH.
8. 3/4" X 8' MIN. COPPER GROUND ROD. IF SUBSURFACE CONDITIONS EXIST WHICH PROHIBIT THE PLACEMENT OF THE GROUND ROD IN A VERTICAL POSITION, THE ROD MAY BE DRIVEN AT AN OBLIQUE ANGLE NOT TO EXCEED 45 DEGREES FROM VERTICAL OR BURIED IN A TRENCH AT LEAST 30 IN. DEEP. CONNECTION TO GROUND ROD SHALL BE CADWELDED.
9. DOUBLE GALVANIZED 1/4" STEEL TETHER WIRE - 7 STRAND HIGH STRENGTH GRADE. INSTALL HORIZONTAL OR BELOW HORIZONTAL.
10. 1/2" GALVANIZED OVAL EYE BOLT.
11. NON-CORROSIVE METAL CABLE HANGERS AT 12" CENTERS.
12. MULTI-CONDUCTOR CABLE (SEE PLANS).
13. METER SOCKET AND CABINET.
14. CONTROLLER CABINET. ALL CONDUITS SHALL ENTER THE BOTTOM OF THE CABINET. NO HOLES SHALL BE MADE IN THE TOP, BACK OR SIDES OF THE CABINET.
15. JUNCTION BOX (NEMA 4).
16. DISCONNECT HANGER (NOT REQUIRED IF TEMPORARY)
17. CIRCUIT BREAKER. SEE DRAWING 902.15 FOR DETAILS.
18. 5/8" GALVANIZED STRAIGHT THIMBLEYE BOLT WITH GALVANIZED NUT AND 2-1/2" GALVANIZED CURVE WASHER.
19. 5/8" GALVANIZED ANGLE THIMBLEYE.
20. STETHER WIRE AND CLAMP WITH QUICK RELEASE PROVISIONS. SEE DETAIL FOR MOUNTING TO POLE AND SIGNAL. OPTIONAL ATTACHMENT PERMITTED WITHAPPROVAL OF ENGINEER.
21. 2-1/2" GALVANIZED POST PLATE FASTENED TO POLE WITH ONE 5/8 " GALVANIZED MACHINE BOLT & TWO 3/8" x 4" GALVANIZED LAG SCREWS.
22. 2-1/2" GALVANIZED CONNECTOR END FITTING.
23. ALL LOCATIONS REQUIRE GUY WIRE PROTECTOR. (7' MIN.)
24. 3/4" x 8' GALVANIZED THIMBLEYE ANCHOR ROD. (30"MIN. LENGTH IN ROCK)
25. #6 AWG BARE COPPER WIRE IN 1/2" CONDUIT.
26. 1/4" AUTOMATIC JAW TYPE CABLE FITTING WITH SHORT BAIL. 5990 LBS. MINIMUM HOLDING STRENGTH.
27. LIGHTING CIRCUIT BREAKER CABINET (IF LUMINARIES ARE SPECIFIED SEE DRAWING 902.15 FOR DETAILS.

GENERAL NOTES:

ALL APPURTENANCES TO BE MOUNTED ON POLE SHALL BE FASTENED TO POLE AS RECOMMENDED BY THE MANUFACTURER.

SCHEDULE 40 POLYETHYLENE OR POLYVINYL CHLORIDE CONDUIT AND wEATHER HEAD SHALL BE USED ON UTILITY COMPANY POLES IN LIEU OF RIGID STEEL CONDUIT.

NO DIRECT PAYMENT WILL BE MADE FOR GUYS, CONDUIT AND JUNCTION BOXES ON POLES, HARDWARE, LIGHTING BRACKET ARMS OR ANY OTHER ITEMS FOR WHICH SEPARATE PAYMENT IS NOT PROVIDED.

ALL GUY WIRES SHALL BE GROUNDED.

MISSOURI HIGHWAYS AND TRANSPORTATION COMMISSION

TRAFFIC SIGNALS
WOOD POLE
SPAN WIRE DETAILS

DATE:_____ | EFFECTIVE: 07-01-2004 | 902.70L | 1/2

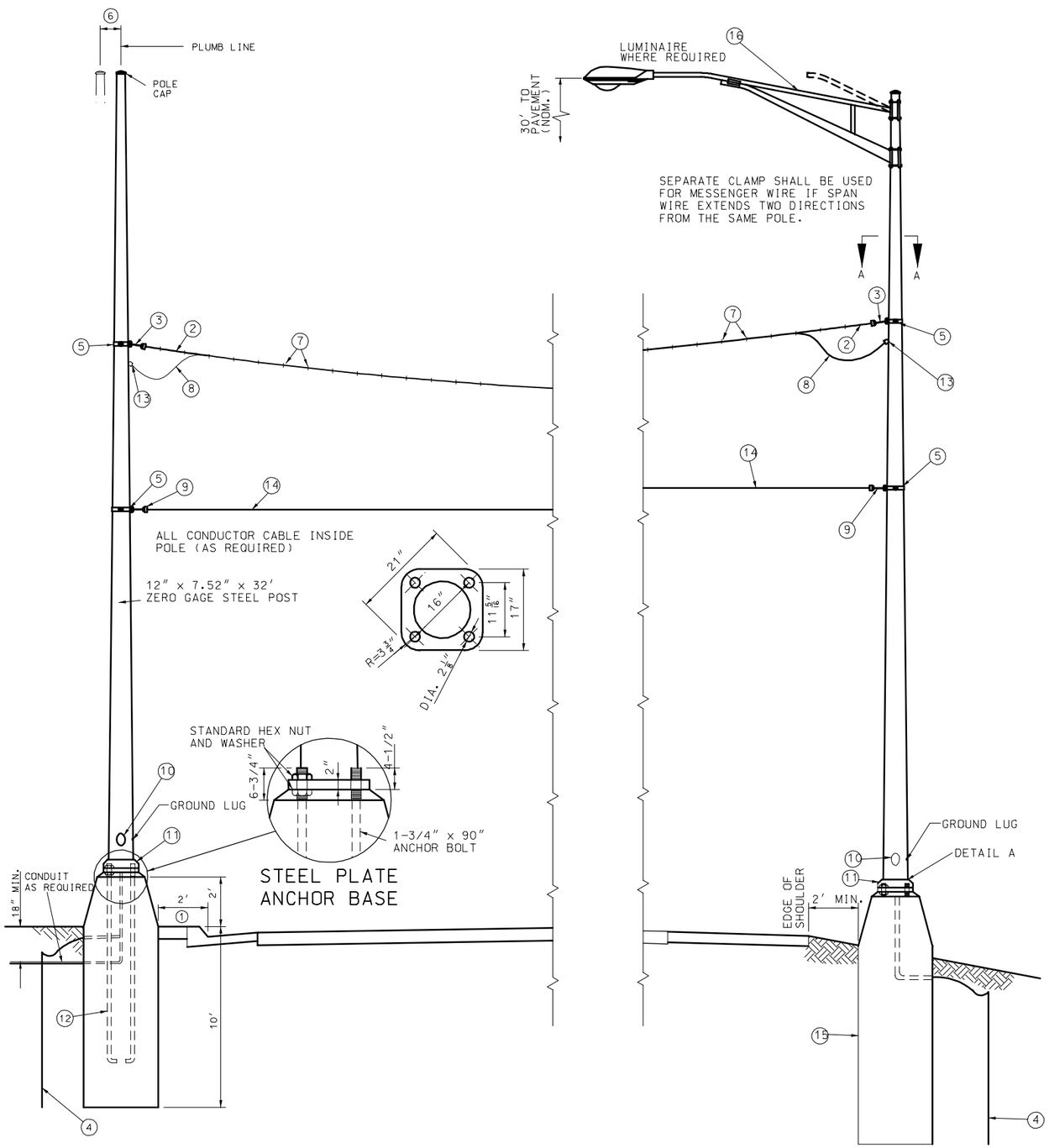

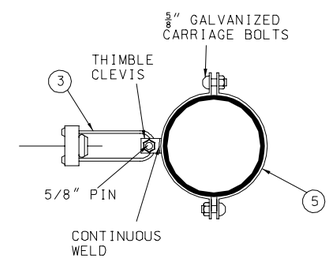

SECTION A-A

STEEL POST DETAILS

1. 6" IF LOCATED WITHIN 4' OF CONCRETE MEDIAN.
2. DOUBLE GALVANIZED 3/8" STEEL GUY WIRE - 7 STRAND HIGH STRENGTH GRADE.
3. 3/8" AUTOMATIC JAW TYPE CABLE FITTING WITH SHORT BAIL. 13,860 LBS. MINIMUM HOLDING STRENGTH.
4. 3/4" x 8' MIN. COPPER GROUND ROD. ONE POLE SHALL BE GROUNDED BY CONNECTING NO. 6 AWG RARE COPPER WIRE FROM GROUNDING LUG INSIDE POLE TO GROUND ROD BY MEANS OF A GALVANIZED WIRE CLAMP LOCATED INSIDE OF POLE. GROUND LUG SHALL BE ORIENTED 90° OR 180° TO HANDHOLE. IF SUBSURFACE CONDITIONS EXIST WHICH PROHIBIT THE PLACEMENT OF THE GROUND ROD IN A VERTICAL POSITION. THE ROD MAY BE DRIVEN AT AN OBLIQUE ANGLE NOT TO EXCEED 45° FROM VERTICAL OR BURIED IN A TRENCH AT LEAST 30 IN. DEEP. CONNECTION TO GROUND ROD SHALL BE CADWELDED.
5. GALVANIZED 1/4" STEEL CLEVIS CLAMP TO FASTEN TO THE POLE WITH 5/8" GALVANIZED CARRIAGE BOLTS.
6. RAKE AS NECESSARY. 10" MAXIMUM.
7. NON-CORROSIVE METAL CABLE HANGERS AT 12" CENTERS.
8. MULTI-CONDUCTOR CABLE. (AS REQUIRED)
9. 1/4" AUTOMATIC JAW TYPE CABLE FITTING WITH SHORT BAIL. 5990 LBS. MINIMUM HOLDING STRENGTH.
10. 4" x 6-1/2" HANDHOLE & COVER WITH REINFORCED FRAME WELDED TO POLE.
11. ONE-PIECE OR TWO-PIECE METAL BASE COVER OR INDIVIDUAL NUT COVERS.
12. FULLY GALVANIZED ANCHOR BOLT.
13. WIRE ENTRANCE WITH INSULATED WEATHERPROOF BUSHING. (AS REQUIRED)
14. DOUBLE GALVANIZED 1/4" STEEL - 7 STRAND HIGH STRENGTH GRADE TETHER WIRE & CLAMP WITH QUICK RELEASE PROVISIONS. INSTALL HORIZONTAL OR BELOW HORIZONTAL.
15. TYPE A-10 BASE. SEE DRAWING 902.30 FOR DETAILS.
16. LUMINAIRE AND BRACKET ARE AS SPECIFIED ON PLANS. SEE DRAWING 901.00 FOR MOUNTING DETAILS.

GENERAL NOTES:

WHEN WELD IS DETAILED AND MANUFACTURED AS SHOWN IN DETAIL A, SPANS WITHOUT GUY WIRES SHALL BE:
110' FOR SINGLE SPAN, 4 SIGNAL HEADS.
70' FOR TWO SPANS SUPPORTED FROM ONE POLE, 3 SIGNAL HEADS.

CONCRETE POLE EMBEDMENT SHALL BE CLASS B CONCRETE.

SEE SHEET 1 FOR DOWN GUY INFORMATION WHEN DOWN GUY IS SPECIFIED ON PLANS.

EXPANSIVE GROUT SHALL BE USED BETWEEN THE POLE BASE PLATE AND THE CONCRETE BASE WHEN INDIVIDUAL NUT COVERS ARE USED.

MISSOURI HIGHWAYS AND TRANSPORTATION COMMISSION

TRAFFIC SIGNALS

RIGID SPAN WIRE DETAILS

DATE:_____ EFFECTIVE: 07-01-2004 **902.70L** 2/2