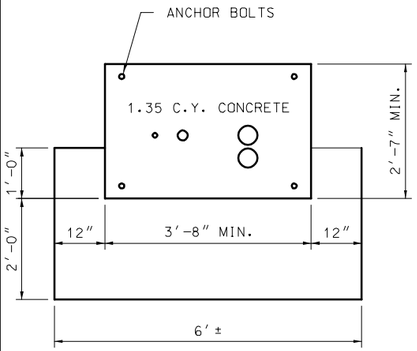

PLAN VIEW

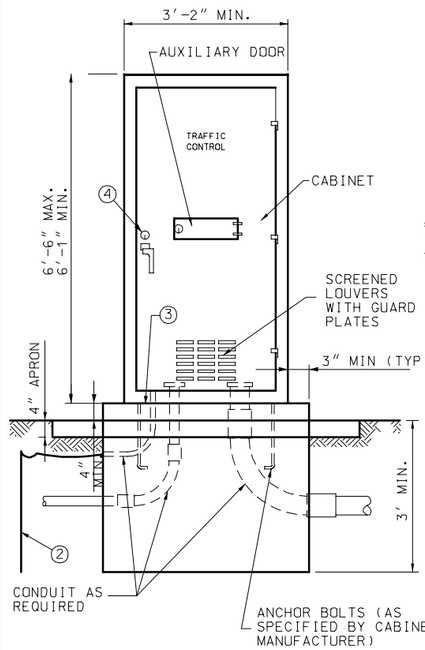

FOR CONTROLLER CABINETS WITH HEIGHTS FROM 6′-1″ TO 6′-6″

TYPE E

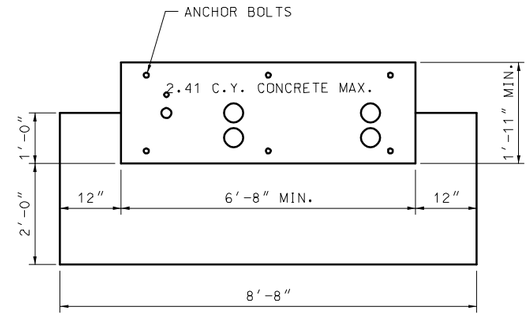

PLAN VIEW

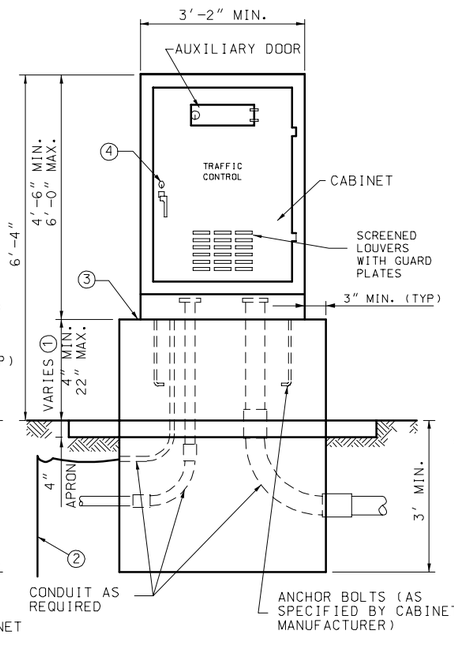

FOR CONTROLLER CABINETS WITH HEIGHTS FROM 4′-4″ TO 6′-0″

TYPE EV

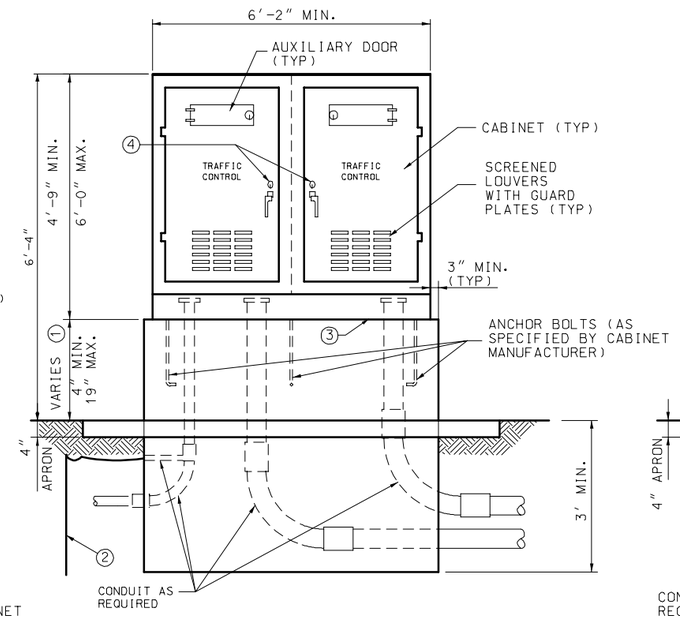

DOUBLE

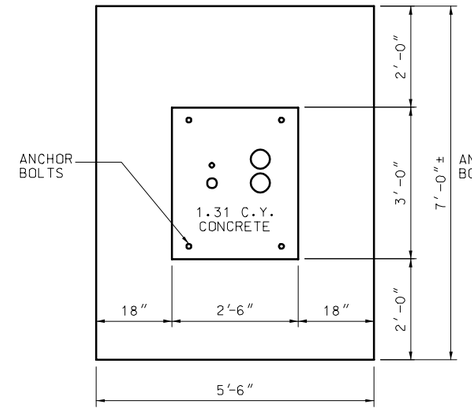

PLAN VIEW

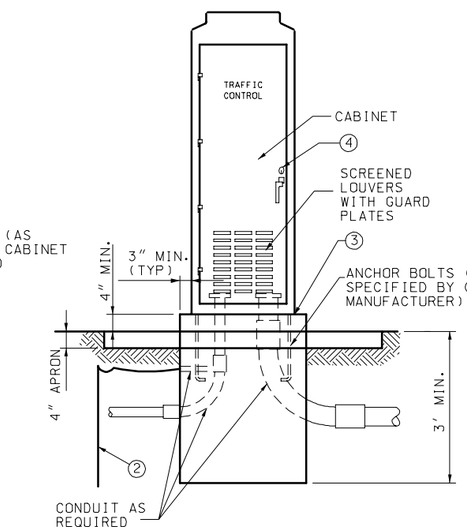

FOR TYPE 170 CONTROLLER CABINETS

TYPE 332

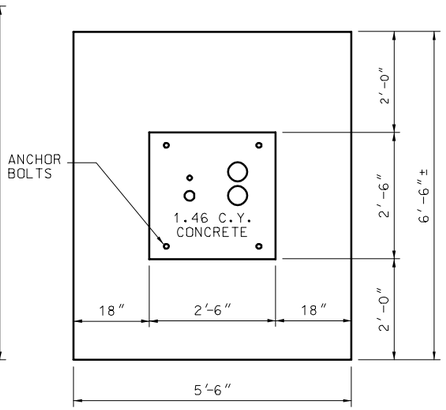

PLAN VIEW

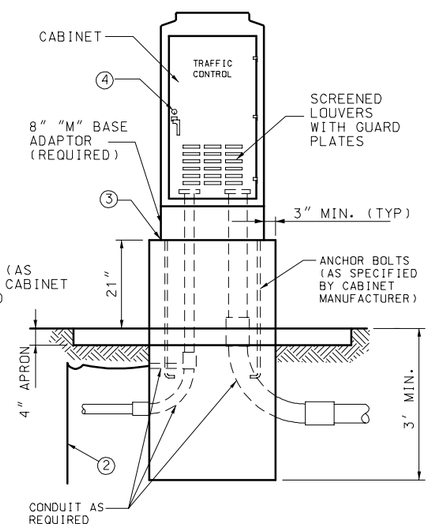

FOR TYPE 170 CONTROLLER CABINETS

TYPE 336S

CONTROLLER CABINETS AND BASE TYPES

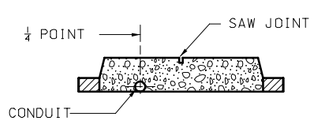

IN PROPOSED CONCRETE MEDIAN ON EXISTING PAVEMENT

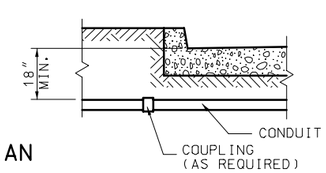

0.5% MINIMUM SLOPE

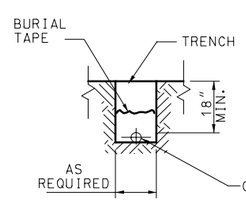

NON-PAVED SURFACED

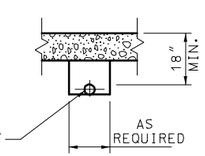

PAVED SURFACE

CONDUIT LOCATIONS

NOTES:

1. DIMENSION VARIES ACCORDING TO CABINET HEIGHT.
2. GROUND ROD, ¾″ DIA. × 8′ MIN. IF SUBSURFACE CONDITIONS EXIST WHICH PROHIBIT THE PLACEMENT OF THE GROUND ROD IN A VERTICAL POSITION, THE ROD MAY BE DRIVEN AT AN OBLIQUE ANGLE NOT TO EXCEED 45 DEGREES FROM VERTICAL OR BURIED IN A TRENCH AT LEAST 30 IN. DEEP. CONNECTION TO GROUND ROD SHALL BE CADWELDED.
3. LIFETIME SILICONE CAULK BETWEEN CABINET AND BASE.
4. #2 CORBIN LOCK

MISSOURI HIGHWAYS AND TRANSPORTATION COMMISSION

TRAFFIC SIGNALS
CONTROLLERS
CONDUIT LOCATION

DATE:_____ | EFFECTIVE: 07-01-2004 | **902.10P** | 1/1