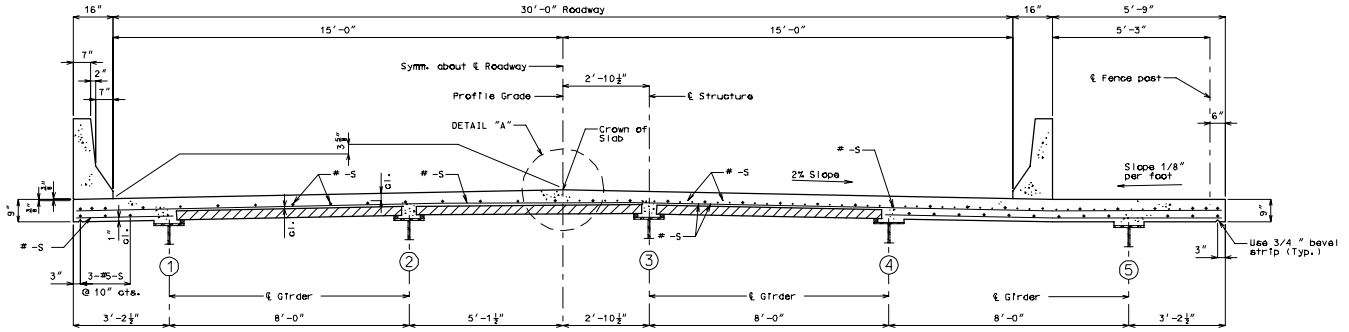

HALF SECTION NEAR ℄ SPAN

HALF SECTION NEAR INTERMEDIATE BENT

30'-0" ROADWAY - 5 GIRDER

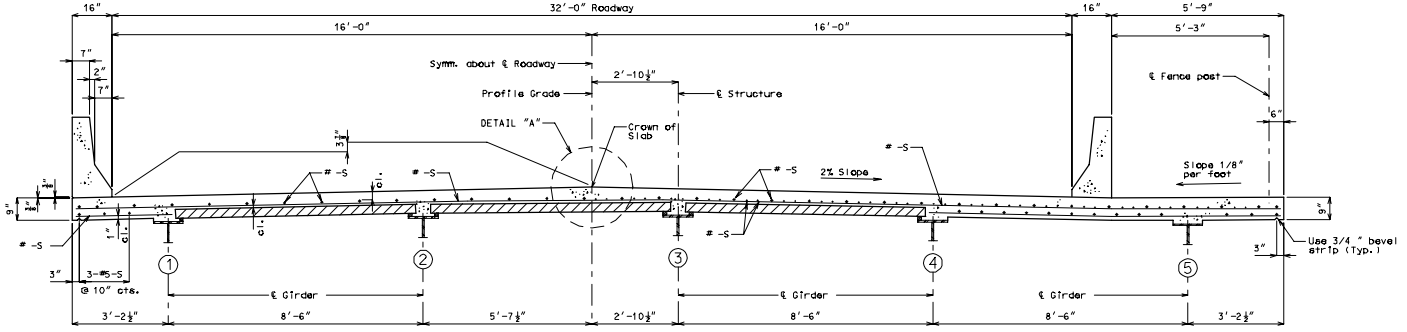

HALF SECTION NEAR ℄ SPAN

HALF SECTION NEAR INTERMEDIATE BENT

32'-0" ROADWAY - 5 GIRDER

SLAB 6

REV.