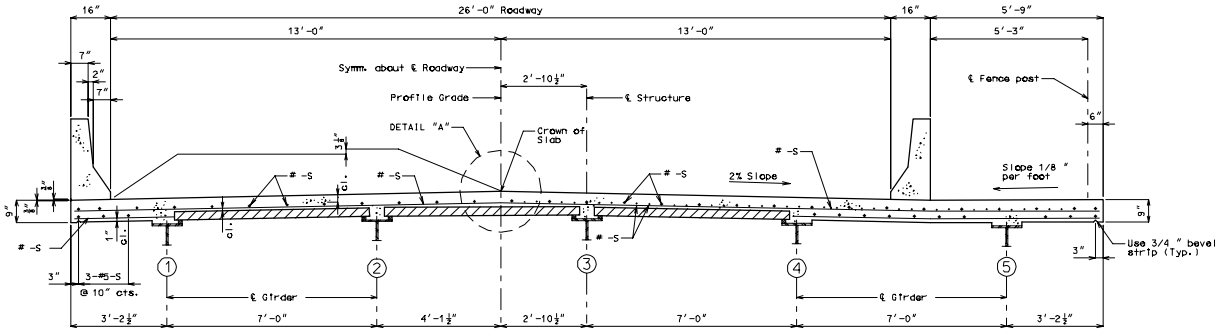

HALF SECTION NEAR ℄ SPAN

HALF SECTION NEAR INTERMEDIATE BENT

26'-0" ROADWAY - 5 GIRDER

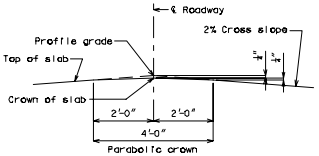

DETAIL "A"

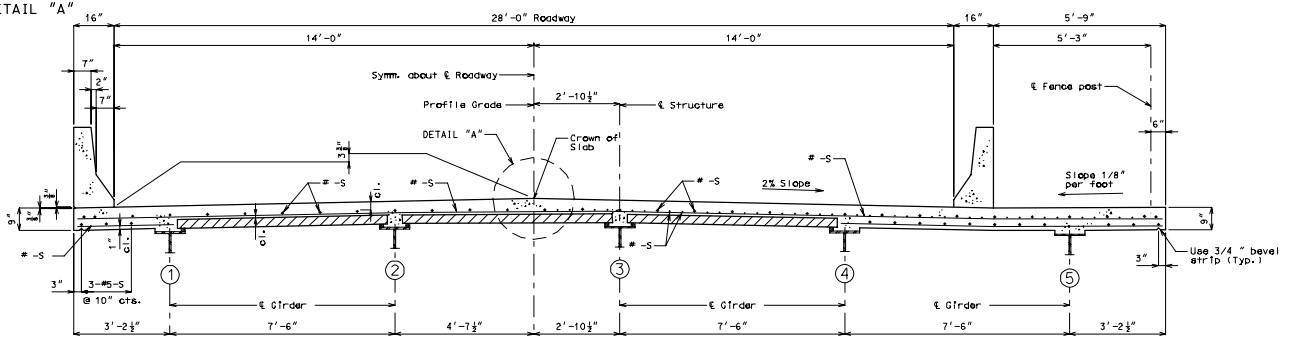

HALF SECTION NEAR ℄ SPAN

HALF SECTION NEAR INTERMEDIATE BENT

28'-0" ROADWAY - 5 GIRDER

SLAB 5

REV.