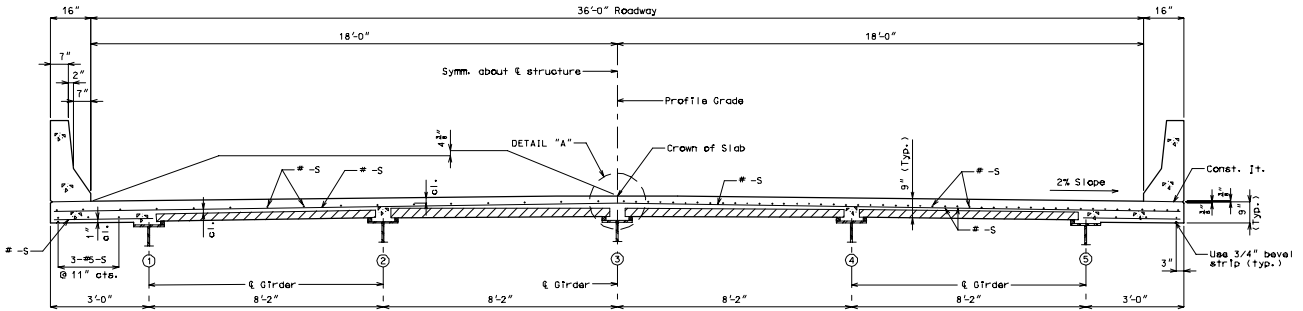

HALF SECTION NEAR ℄ SPAN HALF SECTION NEAR INTERMEDIATE BENT

36'-0" ROADWAY - 5 GIRDER (SYMM.)

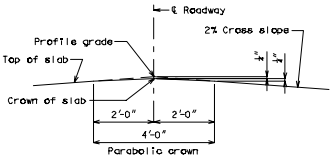

DETAIL "A"

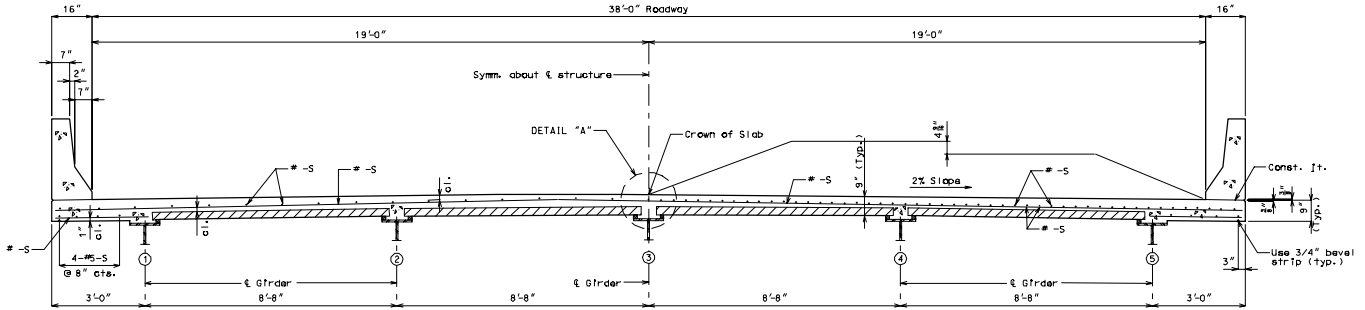

HALF SECTION NEAR ℄ SPAN HALF SECTION NEAR INTERMEDIATE BENT

38'-0" ROADWAY - 5 GIRDER (UNSYMM.)

SLAB 3L