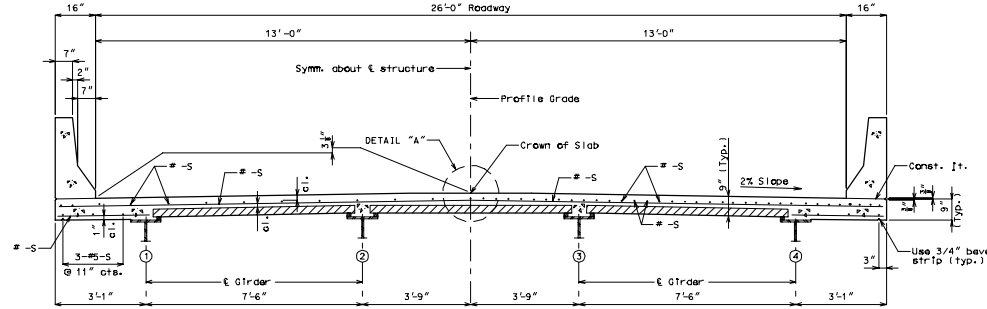

HALF SECTION NEAR ℄ SPAN HALF SECTION NEAR INTERMEDIATE BENT

26'-0" ROADWAY - 4 GIRDER (SYMM.)

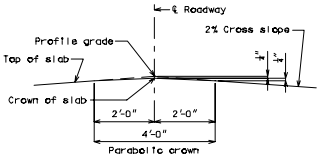

DETAIL "A"

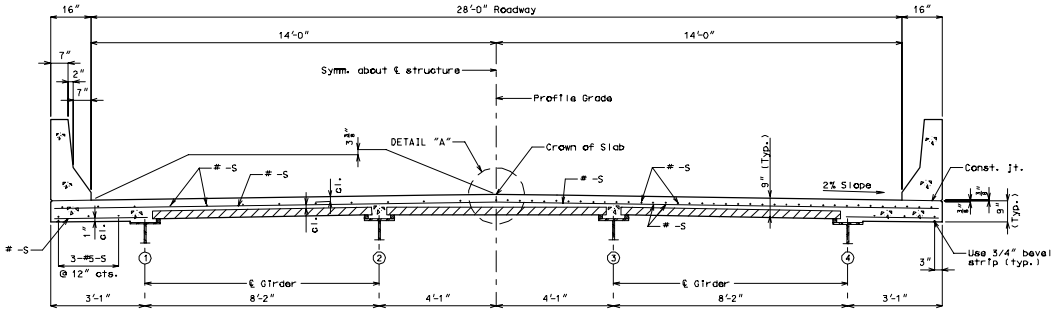

HALF SECTION NEAR ℄ SPAN HALF SECTION NEAR INTERMEDIATE BENT

28'-0" ROADWAY - 4 GIRDER (SYMM.)

SLAB 1L