State	Proj. No.	Sheet No.
MO		

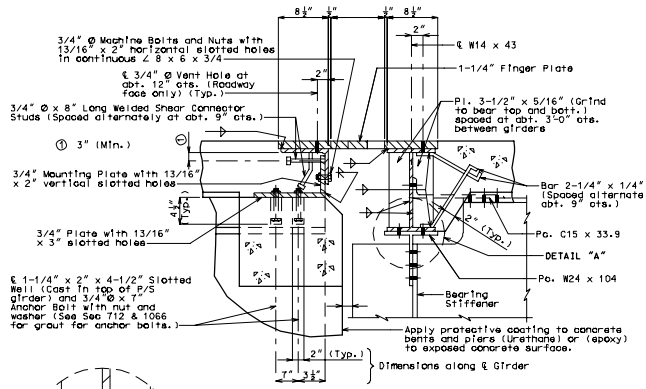

PART SECTION THRU EXPANSION DEVICE

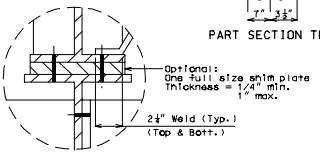

DETAIL "A"

Note: Concrete shall be forced under and around finger plate supporting hardware, anchors, angles and bars. Proper consolidation shall be achieved by localized internal vibration.

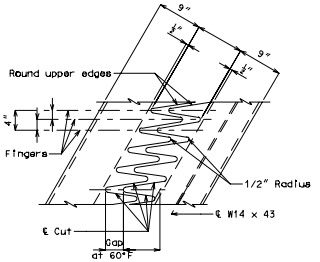

TYPICAL PLAN OF PLATE

GENERAL NOTES:

Finger plate shall be cut with a machine guided gas torch from one plate. The plate from which fingers are cut may be spliced before fingers are cut. The surface of cut shall be perpendicular to the surface of the plate. The cut shall not exceed 1/8" in width. The centerline of cut shall not deviate more than 1/16" from the position of centerline of cut shown. No splicing of finger plate or finger plate assembly will be allowed after fingers are cut. The expansion device shall be fabricated and installed to the crown and grade of the roadway.

Plan dimensions are based on installation at 60°F. The expansion gap and other dimensions shall be increased or decreased for each 10°F rise or fall in temperature at installation.

Material for the expansion device shall be ASTM A709 Grade 36 structural steel. Anchors for the expansion device shall be in accordance with Sec 1037.

Structural steel for the expansion device and curb plate shall be coated with a minimum of two coats of inorganic zinc primer (5 mils minimum) or galvanized in accordance with ASTM A123. Anchors need not be protected from overspray.

Payment for furnishing, coating or galvanizing and installing the structural steel for the expansion device will be considered completely covered by the contract unit price for Expansion Device (Finger Plate) per lin. ft.

All holes shown for connections to be subpunched 11/16" Ø (shop or field drill) and reamed to 13/16" Ø in field.

Longitudinal reinforcing steel shall be placed so that ends shall not be more than ±1" from 3/4" vertical mounting plate at expansion device and the web of W14 x 43 at the expansion device.

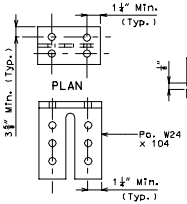

ELEVATION
Pc. W24 x 104

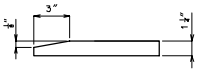

FINGER DETAIL

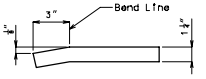

OPTIONAL FINGER DETAIL

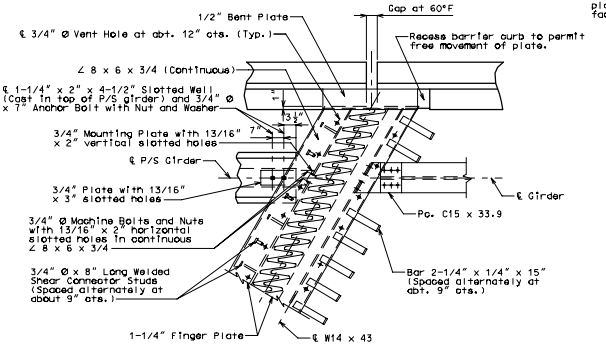

PART PLAN OF EXPANSION DEVICE

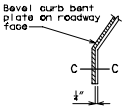

PART ELEVATION AT END OF BEVELED CURB BENT PLATE

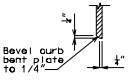

SECTION C-C

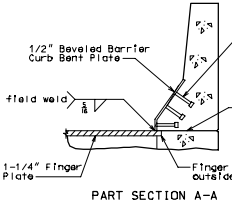

PART SECTION A-A

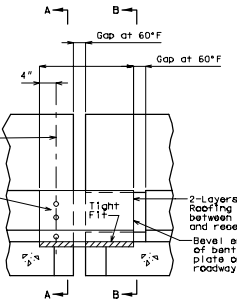

ELEVATION OF BARRIER CURB

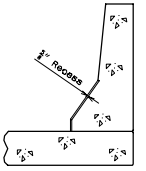

PART SECTION B-B

CREATED IN MICROSTATION

DETAILS OF FINGER PLATE EXPANSION DEVICE AT INT. BENT NO.

Detailed
Checked

Note: This drawing is not to scale. Follow dimensions.

Sheet No. of

COUNTY

FIN 1