State	Proj. No.	Sheet No.
MO		

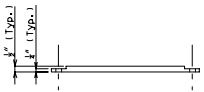

ELEVATION OF GALVANIZED STEEL STOPPER PLATE

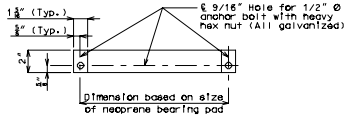

PLAN OF GALVANIZED STEEL STOPPER PLATE

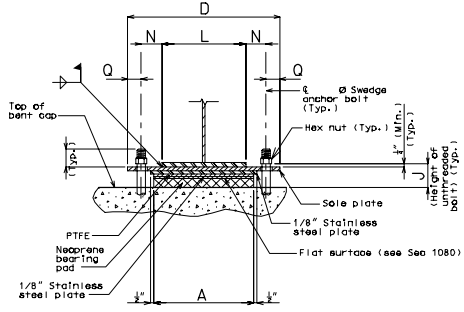

END VIEW

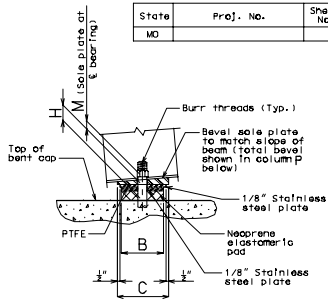

SIDE VIEW

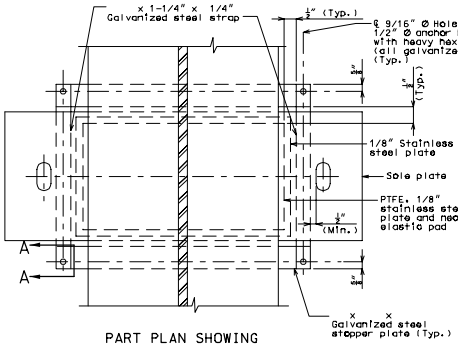

PART PLAN SHOWING STOPPER PLATE

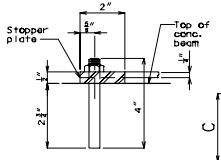

SECTION A-A

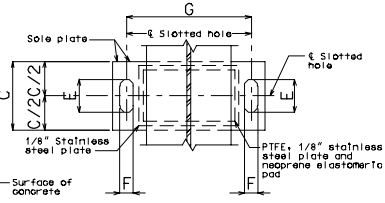

PART PLAN

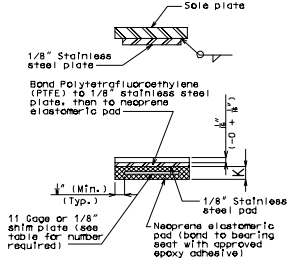

NEOPRENE ELASTOMERIC PAD

Stopper plates and straps shall be provided to prevent loss of support due to creeping of PTFE bearings. Payment for fabricating and installing the stopper plates and straps will be considered completely covered by the contract unit price for Type N PTFE Bearing.

The bottom face of the 1/8" stainless steel plate that is welded to the sole plate shall be lubricated with a lubricant that is approved by the bearing manufacturer.

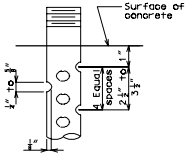

DETAIL FOR 3/4" Ø THRU 2-1/2" Ø ANCHOR BOLTS

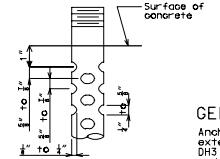

OPTIONAL DETAIL FOR 1-3/8" Ø THRU 2-1/2" Ø ANCHOR BOLTS

SWEDGE ANCHOR BOLT DETAILS

GENERAL NOTES:

Anchor bolts shall be Ø ASTM A709 Grade 50W steel swedged bolts and shall extend into the concrete with ASTM A194 - 2, 2H or ASTM A563 - C, C3, D, DH, DH3 heavy hexagon nuts. Actual manufacturer's certified mill test reports (chemical and mechanical) shall be provided. Swedging shall be 1" less than extension into the concrete.

All structural steel for the anchor bolts and heavy hexagon nuts shall be coated with a minimum of two coats of inorganic zinc primer (5 mils minimum).

Neoprene Elastomeric Pads shall be Durometer.

Structural steel for sole plate shall be ASTM A709 Grade and shall be coated with a minimum of two coats of inorganic zinc primer (5 mils minimum). The stainless steel plate shall be protected from any coating.(1)

Type N PTFE Bearings shall be in accordance with Sec 716.

(1) USE NOTE H3.29 OR H3.29.1, CHECK WITH STRUCTURAL PROJECT MANAGER. H3.29 SHOWN

CREATED IN MICROSTATION

PTFE SLIDING BEARINGS																		
BENT NO.	A	B	C	D	E	F	G	H	J	K	L	M	N	P	Q	NUMBER OF SHIM PLATES(✱)	NUMBER REQUIRED
																TOTAL BEARINGS	

(✱) The required shim plate shall be placed between layers of elastomer and molded together to form an integral unit.

DETAILS OF TYPE "N" PTFE BEARINGS

Detailed
Checked

Note: This drawing is not to scale. Follow dimensions.

Sheet No. of

COUNTY BRG 7