State	Proj. No.	Sheet No.
MD		

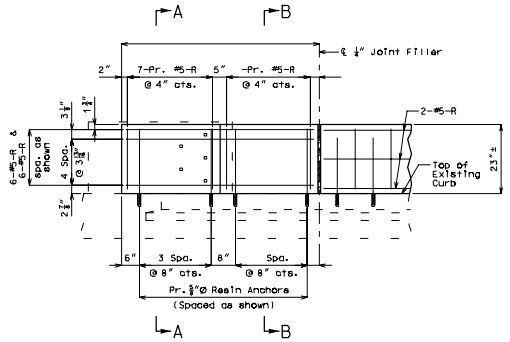

ELEVATION SHOWING END POST REINFORCEMENT (END BENT NO.)

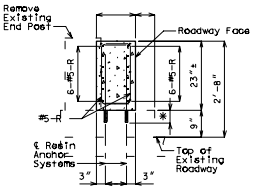

SECTION A-A

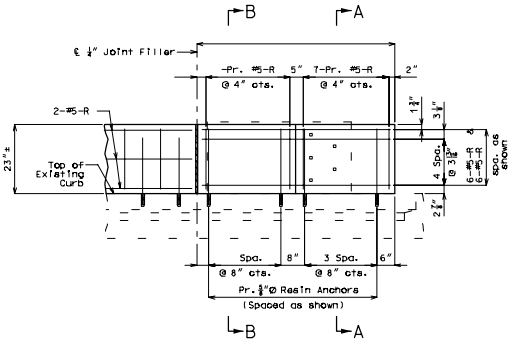

ELEVATION SHOWING END POST REINFORCEMENT (END BENT NO.)

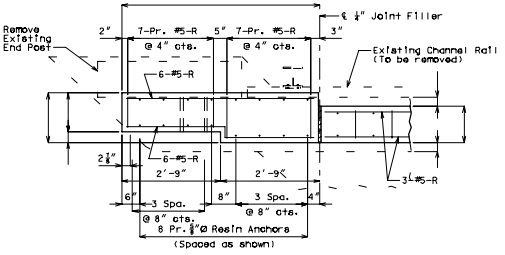

PLAN SHOWING END POST REINFORCEMENT (END BENT NO.)

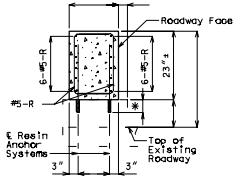

SECTION B-B

Notes: 7/8"Ø Threaded Rods with nuts and washers shall be used in place of 7/8"Ø Bolts (ASTM A307).

1" Ø holes shall be drilled through existing end post for placement of 7/8"Ø threaded rods, nuts, and washers.

For Details of Resin Anchor Systems, see sheet no. .

* Manufacturer's embedment length.

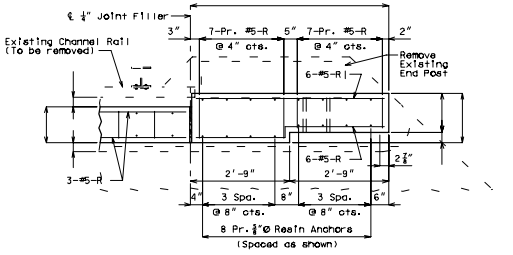

PLAN SHOWING END POST REINFORCEMENT (END BENT NO.)

DETAILS OF CURB BLOCKOUT AT END BENTS

Detailed .
Checked

Note: This drawing is not to scale. Follow dimensions.

Sheet No. of

COUNTY CBO-02 REV.