State	Proj. No.	Sheet No.
MD		

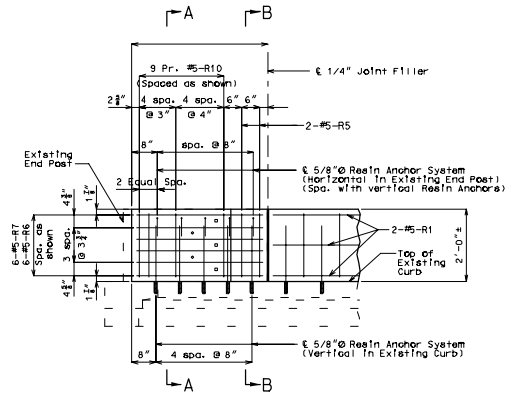

PART SECTION NEAR END POST

END BENT NO. (LEFT SHOWN)
END BENT NO. (RIGHT SIMILAR)

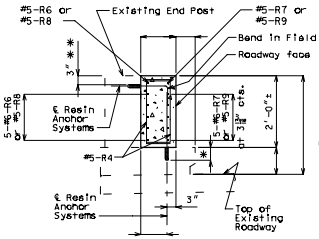

SECTION A-A

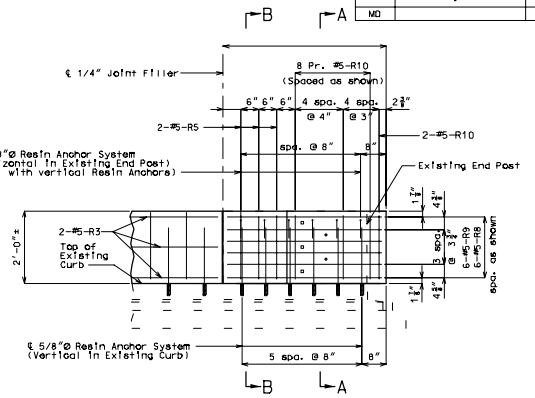

PART SECTION NEAR END POST

END BENT NO. (LEFT SHOWN)
END BENT NO. (RIGHT SIMILAR)

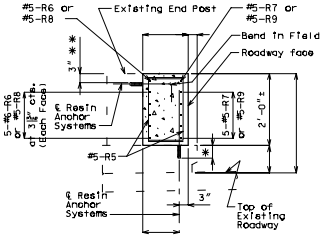

SECTION B-B

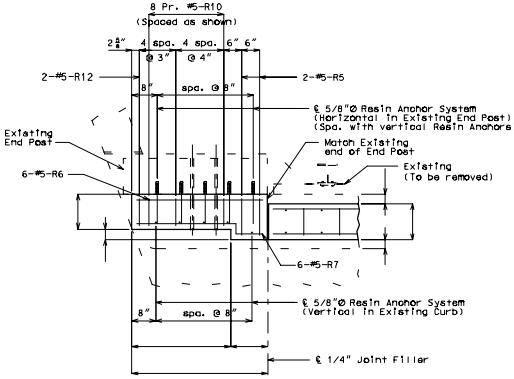

PART PLAN NEAR END POST

END BENT NO. (LEFT SHOWN)
END BENT NO. (RIGHT SIMILAR)

* Manufacturer's embedment length.

** Clearance to top of Resin Anchor Systems (Typical).

Note: 7/8"Ø Threaded Rods with nuts and washers shall be used in place of 7/8"Ø Bolts (ASTM A307).

1" Ø holes shall be drilled through existing end post for placement of 7/8"Ø threaded rods, nuts, and washers.

For Details of Resin Anchor Systems, see sheet no. .

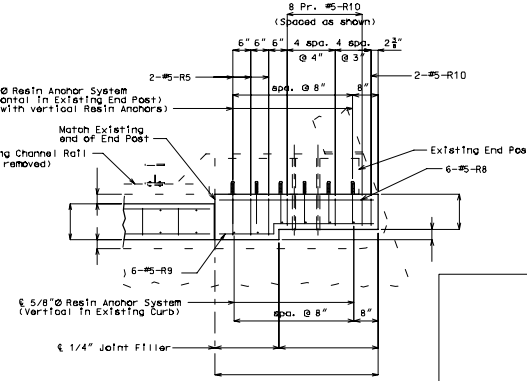

PART PLAN NEAR END POST

END BENT NO. (LEFT SHOWN)
END BENT NO. (RIGHT SIMILAR)

DETAILS OF CURB BLOCKOUT AT END BENTS

Detailed
Checked

Note: This drawing is not to scale. Follow dimensions.

Sheet No. of

COUNTY CBO-01

REV.