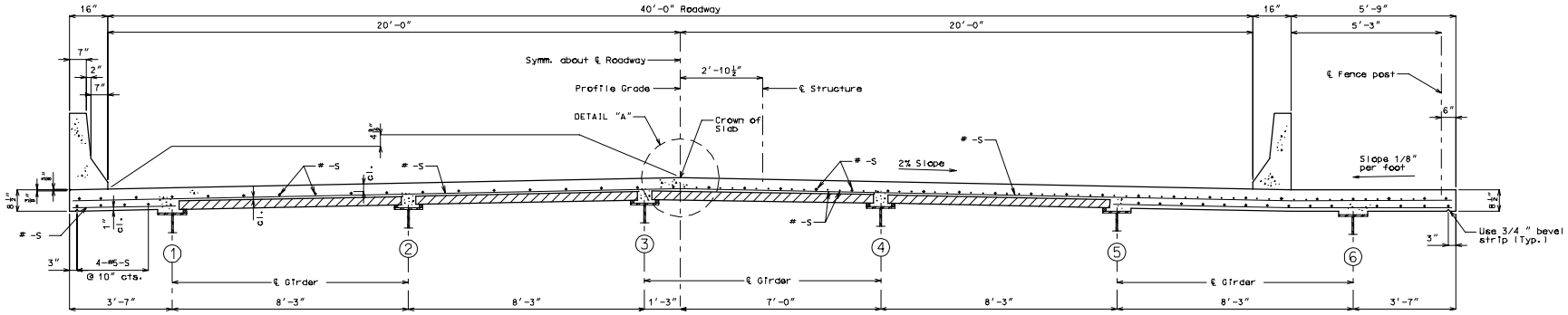

HALF SECTION NEAR ℄ SPAN

HALF SECTION NEAR INTERMEDIATE BENT

40'-0" ROADWAY - 6 GIRDER

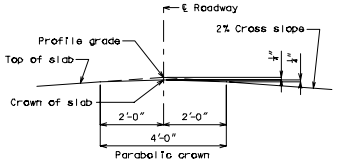

DETAIL "A"

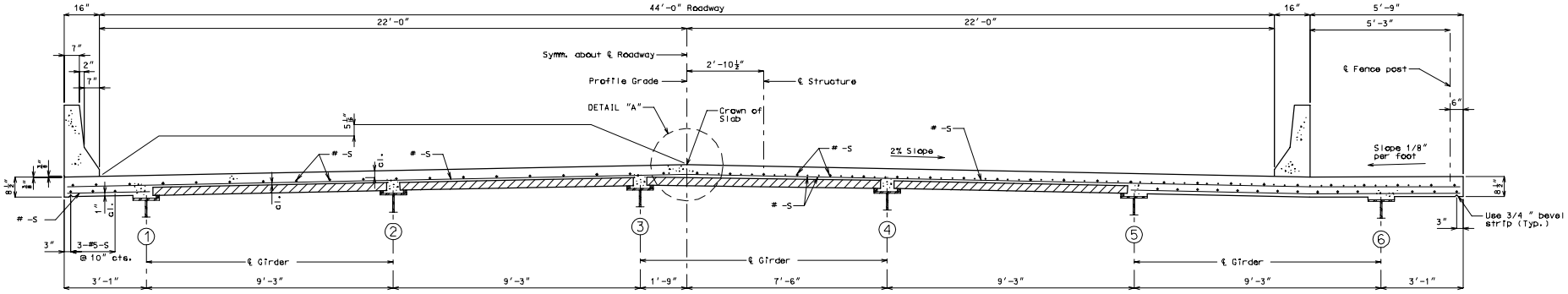

HALF SECTION NEAR ℄ SPAN

HALF SECTION NEAR INTERMEDIATE BENT

44'-0" ROADWAY - 6 GIRDER

SLAB 8

REV.