ROUTE	STATE	DISTRICT	SHEET NO.
	MO		
JOB NO.			
CONTRACT ID			
PROJECT NO.			
COUNTY			DATE

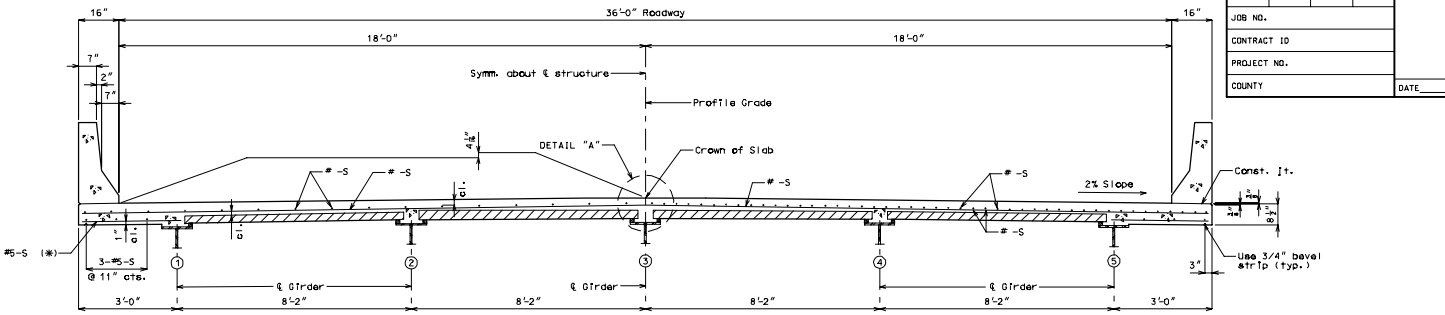

HALF SECTION NEAR ℄ SPAN HALF SECTION NEAR INTERMEDIATE BENT

36'-0" ROADWAY - 5 GIRDER (SYMM.)

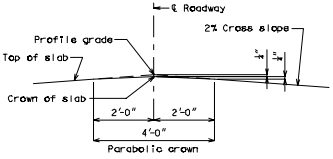

DETAIL "A"

(*) Alternate bar shape available, see Safety Barrier Curb sheet.

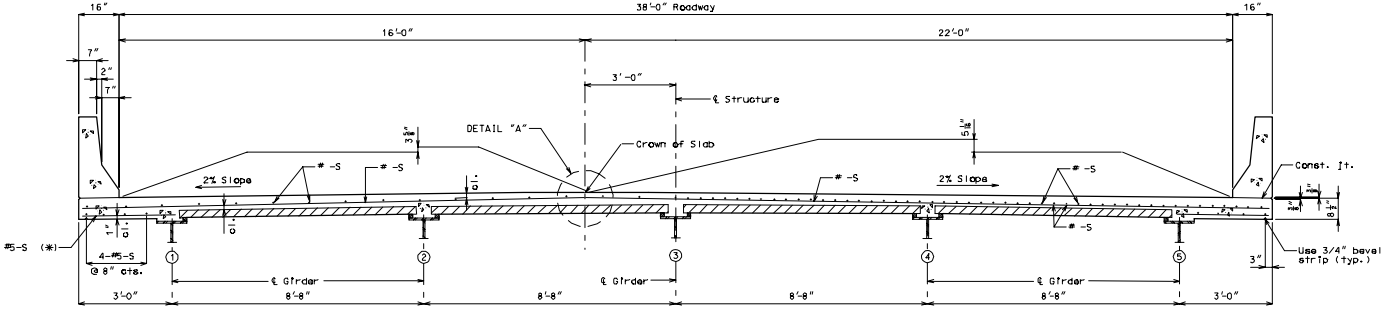

HALF SECTION NEAR ℄ SPAN HALF SECTION NEAR INTERMEDIATE BENT

38'-0" ROADWAY - 5 GIRDER (UNSYMM.)

SLAB 3