ROUTE	STATE MO	DISTRICT	SHEET NO.
JOB NO.			
CONTRACT ID			
PROJECT NO.			
COUNTY			DATE

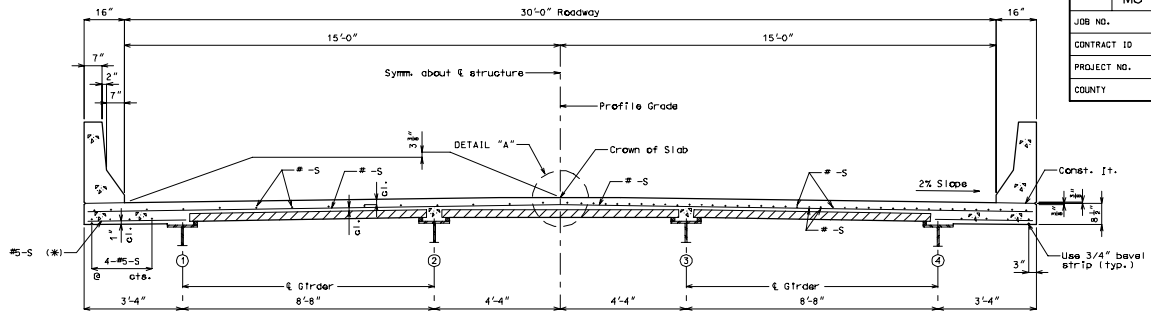

30'-0" ROADWAY - 4 GIRDER (SYMM.)

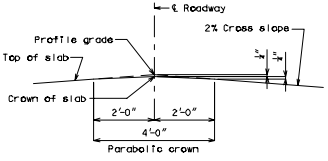

DETAIL "A"

(*) Alternate bar shape available, see Safety Barrier Curb sheet.

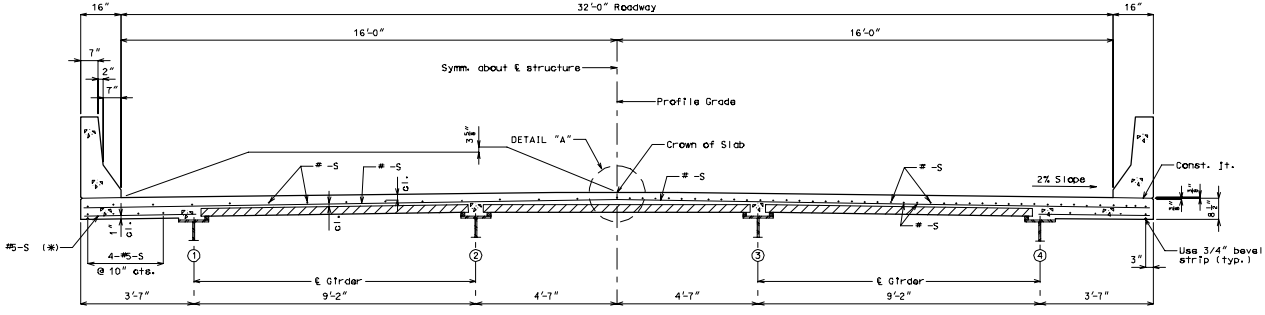

32'-0" ROADWAY - 4 GIRDER (SYMM.)

SLAB 2