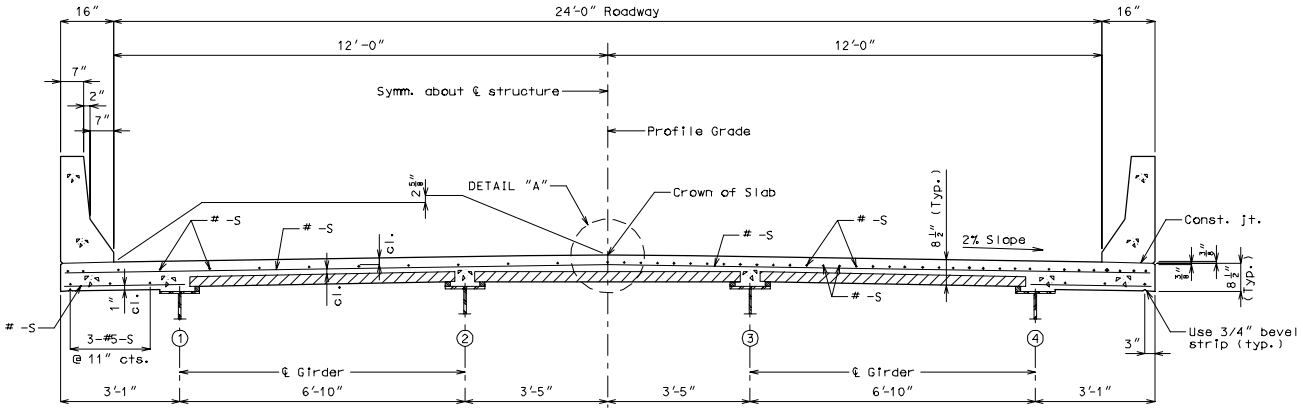

HALF SECTION NEAR ℄ SPAN HALF SECTION NEAR INTERMEDIATE BENT

24'-0" ROADWAY - 4 GIRDER (SYMM.)

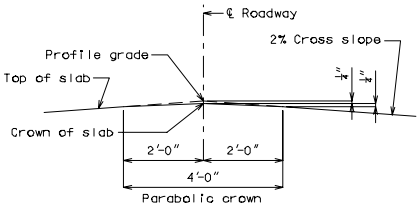

DETAIL "A"

SLAB 0