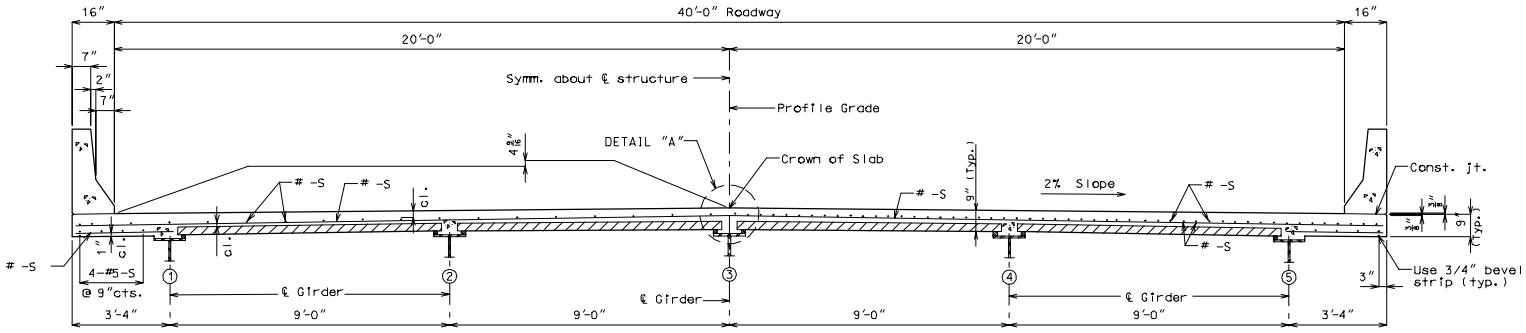

40'-0" ROADWAY - 5 GIRDER (SYMM.)

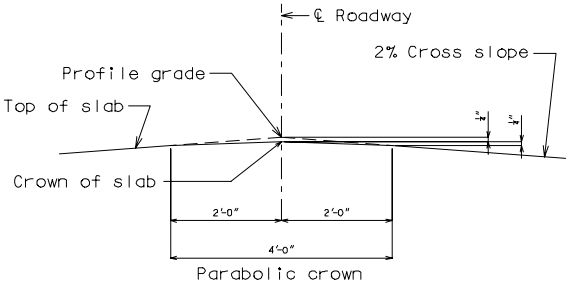

DETAIL "A"

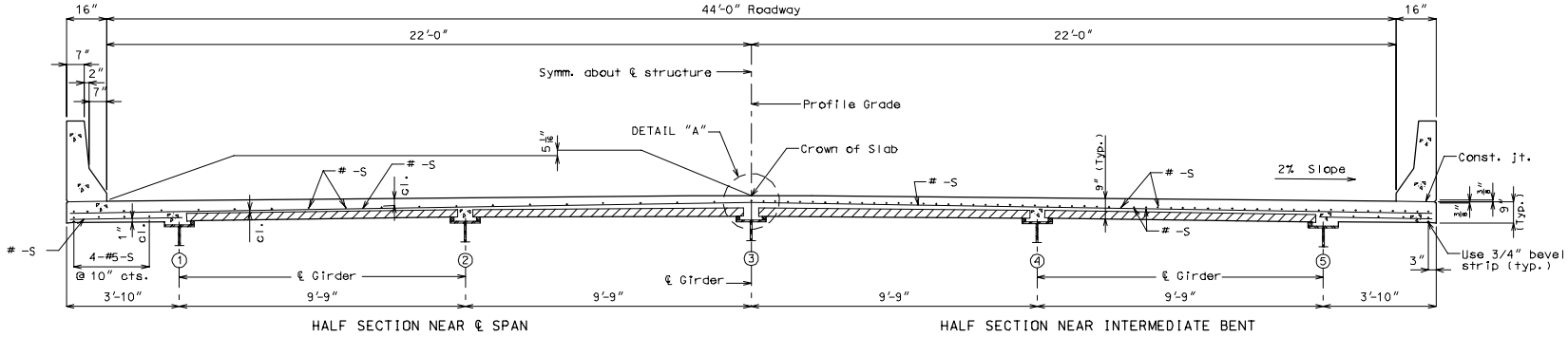

44'-0" ROADWAY - 5 GIRDER (SYMM.)

SLAB 4L