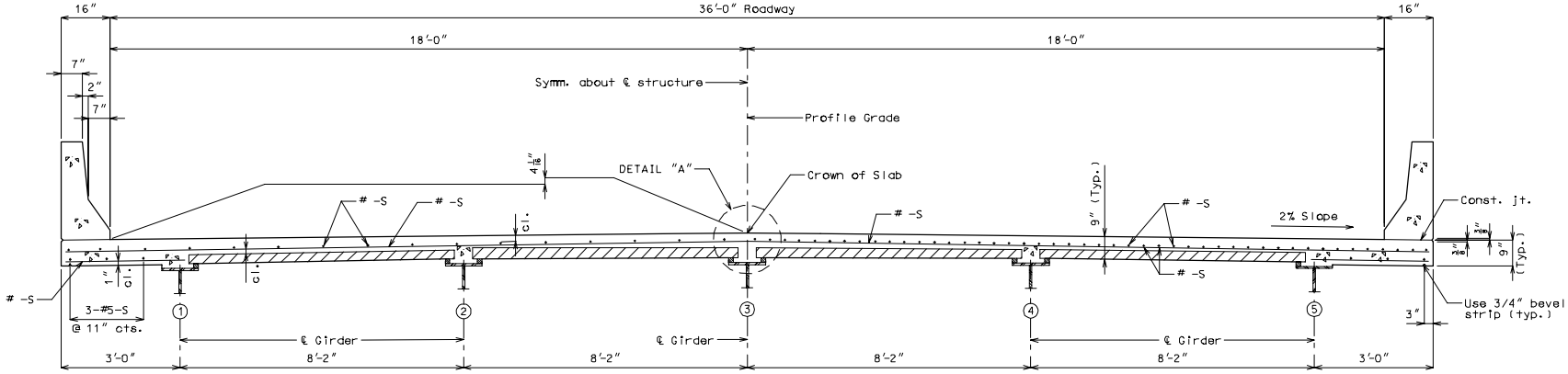

HALF SECTION NEAR ℄ SPAN HALF SECTION NEAR INTERMEDIATE BENT

36'-0" ROADWAY - 5 GIRDER (SYMM.)

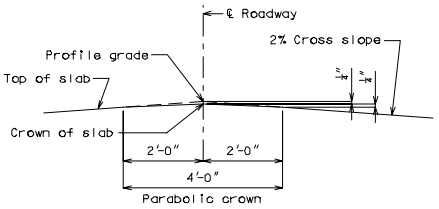

DETAIL "A"

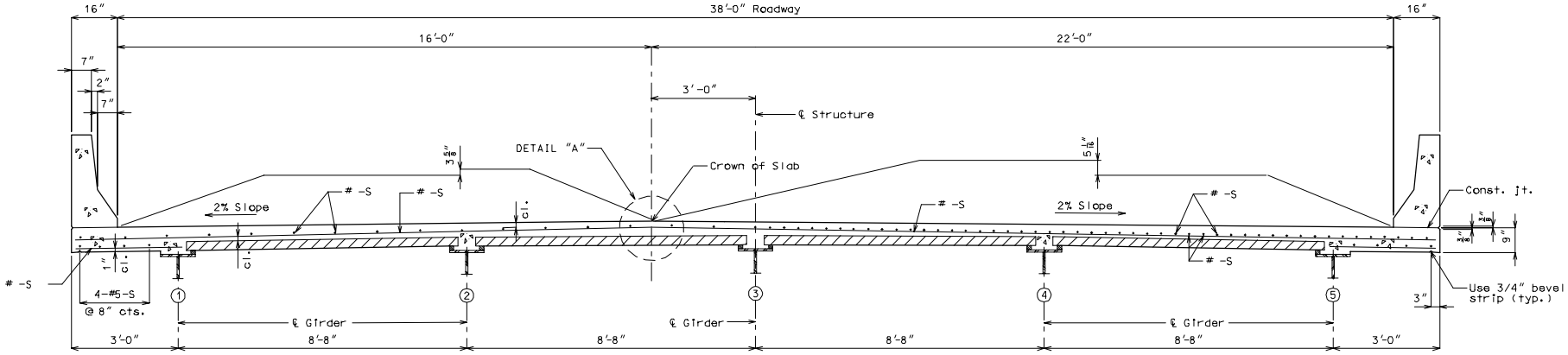

HALF SECTION NEAR ℄ SPAN HALF SECTION NEAR INTERMEDIATE BENT

38'-0" ROADWAY - 5 GIRDER (UNSYMM.)

(Cross section shown is for divided roadways with two 12'-0" lanes & a 4'-0" and 10'-0" shoulder.)

SLAB 3L