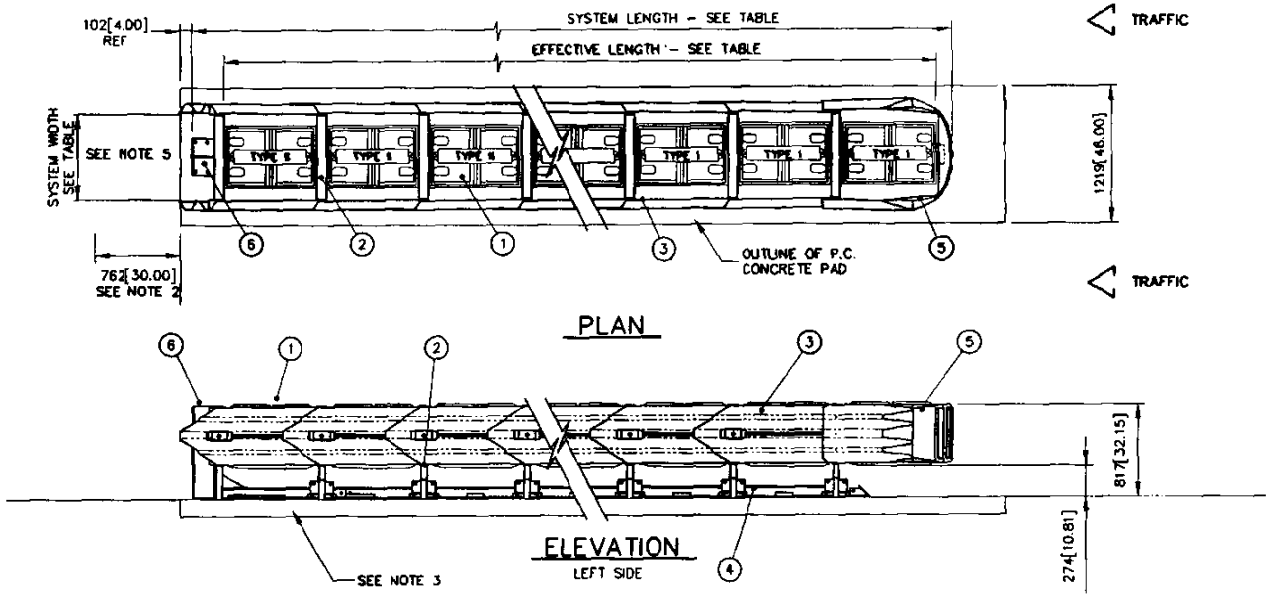

NOTES:

1. IN COMPLIANCE WITH THE AASHTO 1996 ROADSIDE DESIGN GUIDE, MANUFACTURER RECOMMENDS REMOVAL OF ALL CURBS AND ISLANDS TO ENSURE PROPER IMPACT PERFORMANCE.
2. PROVISION SHALL BE MADE FOR REAR FENDER PANELS TO SLIDE REARWARD UPON IMPACT 762 [30.00] MIN.
3. **CAUTION: THE QUADGUARD C.Z. MUST BE CORRECTLY ANCHORED FOR PROPER IMPACT PERFORMANCE.**
   ATTACH SYSTEM USING ONE OF THE FOLLOWING:
   — 7" STUDS MAY BE USED TO ATTACH SYSTEM TO 27.6 MPa[4000 PSI] MIN. P.C. CONCRETE PER THE FOLLOWING MINIMUMS:**
   a) 152[6.00] NON REINFORCED ROADWAY OR PAD
   b) 203[8.00] REINFORCED **PORTABLE** PAD PER THE REFERENCE DETAIL
   c) 178[7.00] DECK STRUCTURE
   — 18" THREADED RODS MAY BE USED TO INSTALL SYSTEM ON ASPHALT.**
   **REFER TO THE QUADGUARD CZ MP-3 ANCHORING SYSTEM INSTALLATION INSTRUCTIONS FOR SPECIFICATIONS.
4. **SEE THE "QUADGUARD SYSTEM DESIGN MANUAL" CODED DIE 820-796 FOR A DESCRIPTION OF ITS IMPACT PERFORMANCE CHARACTERISTICS AND DESIGN LIMITATIONS BEFORE PLACING A SYSTEM AT A GIVEN SITE. INFORMATION AND COPIES OF ABOVE MANUAL ARE AVAILABLE BY CALLING CUTOMER SERVICE DEPARTMENT AT (312) 467-6750**
5. WHERE NECESSARY, THE CUSTOMER SHALL SUPPLY A TRANSITION FROM THE QUADGUARD SYSTEM TO THE OBJECT BEING SHIELDED.
6. UNITS OF MEASUREMENT ARE MILLIMETERS [INCHES] UNLESS OTHERWISE NOTED.

BAYS	24" MODEL#		30" MODEL#		UNIT LENGTH		EFFECTIVE LENGTH		PAD LENGTH	
	GREY	YELLOW	GREY	YELLOW	m	ft-in	m	ft-in	m	ft-in
3	QZ2403G	QZ2403Y	QZ3003G	QZ3003Y	4.00	[13'-1"]	3.57	[11'-8"]	4.57	[15'-0"]
6	QZ2406G	QZ2406Y	QZ3006G	QZ3006Y	6.74	[22'-1"]	6.32	[20'-8"]	7.01	[23'-0"]

UNIDIRECTIONAL

KEY

1. QUADGUARD CARTRIDGE
2. DIAPHRAGM
3. FENDER PANEL
4. MONORAIL
5. NOSE ASSEMBLY
6. C. Z. BACKUP

REFERENCES

PORTABLE CONCRETE PAD 35-40-10
DIAPHRAGM ASSEMBLY 35-40-07
NOSE ASSEMBLY 35-40-05
FENDER PANEL ASSEMBLY 35-40-04
C.Z. BACKUP & RAIL ASSY 35-40-16

DRAWN	S. TRAGESER	6/14/96
DESIGNED	JVM/MHO	3/1/96
CHECKED	KRM	6/17/96
APPROVED	J. Machado	6/17/96
CAD FILE	QSCZCVR-U.dwg	
NEXT ASSEMBLY		

ENERGY ABSORPTION SYSTEMS, INC.
ENGINEERING AND RESEARCH DEPARTMENT

QUADGUARD™ c.z. SYSTEM
FOR CONSTRUCTION ZONES

SCALE	DWG	SHEET	REV
1=40	QSCZCVR-U	1 of 1	

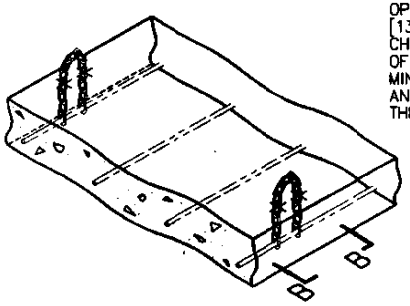

SECTION A-A

OPTIONAL LIFTING POINTS: USE 1/2" [13mm] PROOF COIL CHAIN. THE CHAIN MUST MEET THE REQUIREMENTS OF ASTM A-413 GRADE 28. THE MINIMUM LENGTH CHAIN IS 15 LINKS AND THE REBAR WILL BE INSERTED THROUGH BOTH ENDS AS SHOWN.

NO. OF BAYS	"P" (LIFTING POINT)		"L" (PAD LENGTH)		REBAR REQUIRED		YARDS OF CONCRETE IN PAD	
	[mm]	[ft-in]	[m]	[ft-in]	[m]	[ft-in]	m^3	[$YARDS^3$]
3	1105	[3'-7 1/2"]	4.57	[15'-0"]	25.71	[84'-4"]	1.16	[1.5]
6	1969	[6'-5 1/2"]	7.01	[23'-0"]	39.93	[131'-0"]	1.76	[2.3]

TABLE	
SYSTEM WIDTH	"A"
NARROW	610 [24.00]
MEDIUM	762 [30.00]

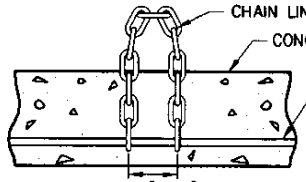

SECTION B-B

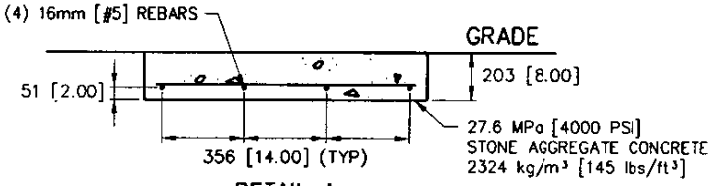

DETAIL A

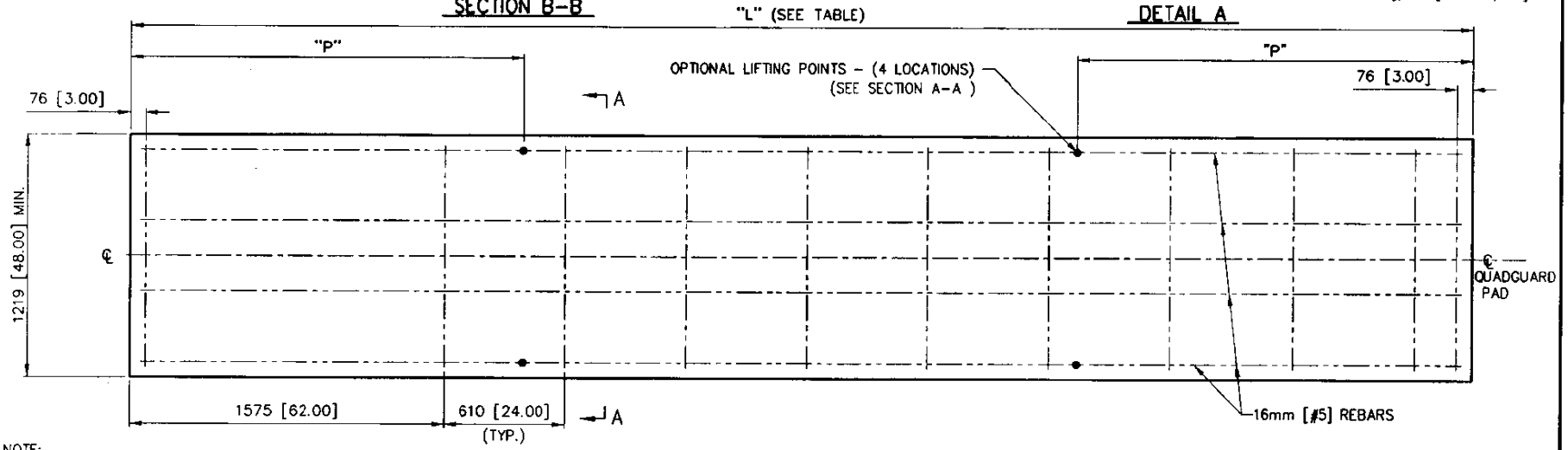

NOTE:

1. CROSS SLOPE OF PAD SHALL NOT EXCEED 8%, AND NOT VARY MORE THAN 2% FROM FRONT TO BACK.
2. TO PREVENT SLIDING DURING AN IMPACT, PAD MUST BE INSTALLED AGAINST OR TIED TO AN EXISTING STRUCTURE. OTHERWISE ADDITIONAL BELOW GRADE SUPPORTS MUST BE ADDED AS DETERMINED NECESSARY BY THE PROJECT ENGINEER.
3. UNITS OF MEASUREMENT ARE MILLIMETERS [INCHES] UNLESS OTHERWISE NOTED.

Revisions	Date	Rev.	By	Ckd.	App.
ADDED NOTE 3,REMOVED "WIDE" FROM TABLE	6/20/96	A	DLS		

REFERENCES

DRAWN: D. Staus	DATE: 5/15/96	
DESIGNED: WGK	DATE: 3/1/96	
CHECKED: S. Trageser	DATE: 5/24/96	
APPROVED: WGK	DATE: 5/28/96	
CAD FILE: T:\35\354010.dwg		
NEXT ASSEMBLY:		

ENERGY ABSORPTION SYSTEMS, INC.
ENGINEERING AND RESEARCH DEPARTMENT

QUADGUARD™ SYSTEM

CONCRETE PAD,CZ,QG

SCALE	DWG	SHEET	REV
1:20	35-40-10	1 of 1	A