Missouri Department of Transportation

Bridge Unit

Bridge LRFD Design Guide

Click Here for Introduction

Section 3.30

Revised 10/01/04

Click Here for Index

3.30.1 Slab on Girder
1.1 Materials
1.2 Limit States and Load Factors
1.3 Loads
1.4 Design and Analysis Methods
1.5 Interior Section Design
1.6 Slab Overhang Section Design
1.7 Standard Slab Details

3.30.2 Prestressed Panels
2.1 Design Criteria
2.2 Design Procedure
2.3 Design Charts
2.4 Standard Details

Details of Concrete Slab on Girder (Cont.) **Slab on Girder**

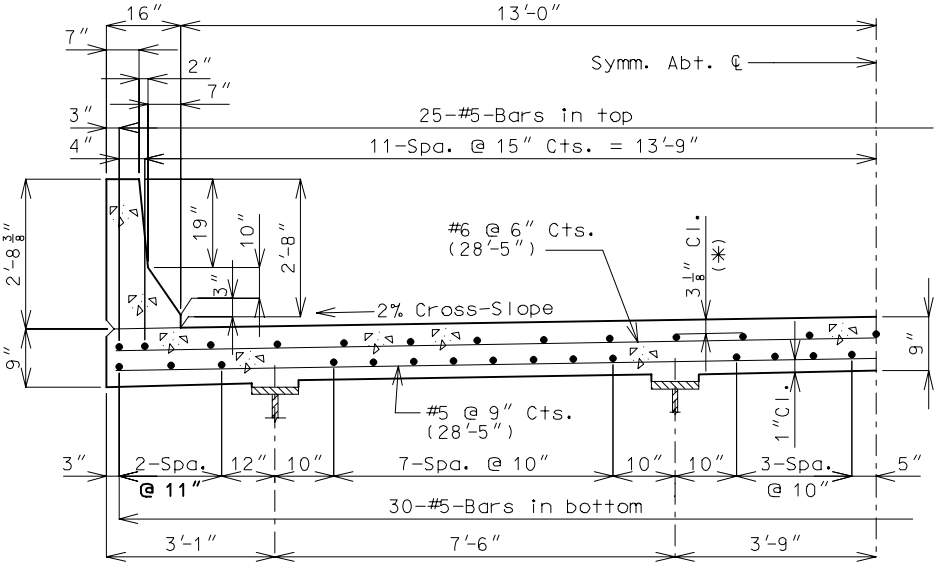

HL93 (26′-0″ ROADWAY - 4 GIRDER)

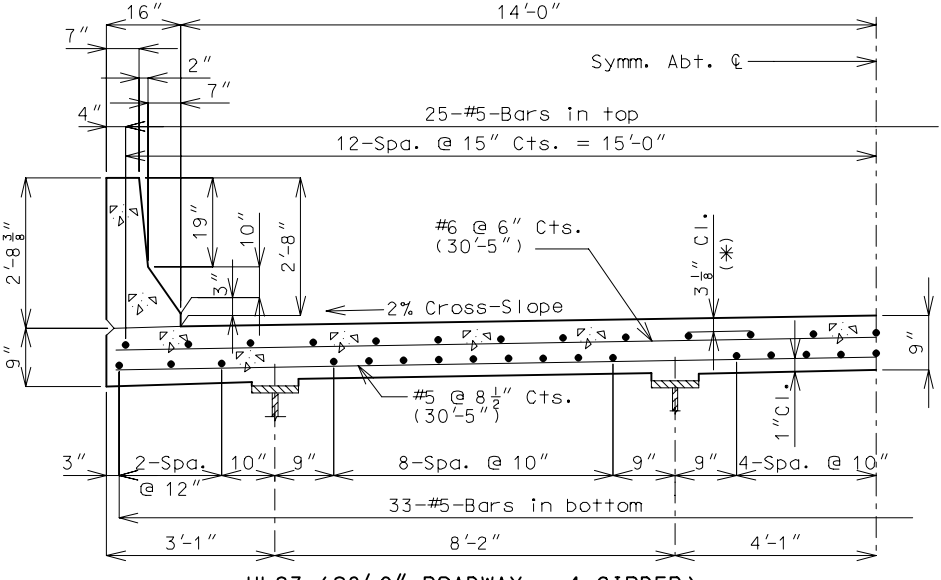

HL93 (28′-0″ ROADWAY - 4 GIRDER)

(✳) Cover will be less for other than #5 longitudinal bars.

Details of Concrete Slab on Girder (Cont.) **Slab on Girder**

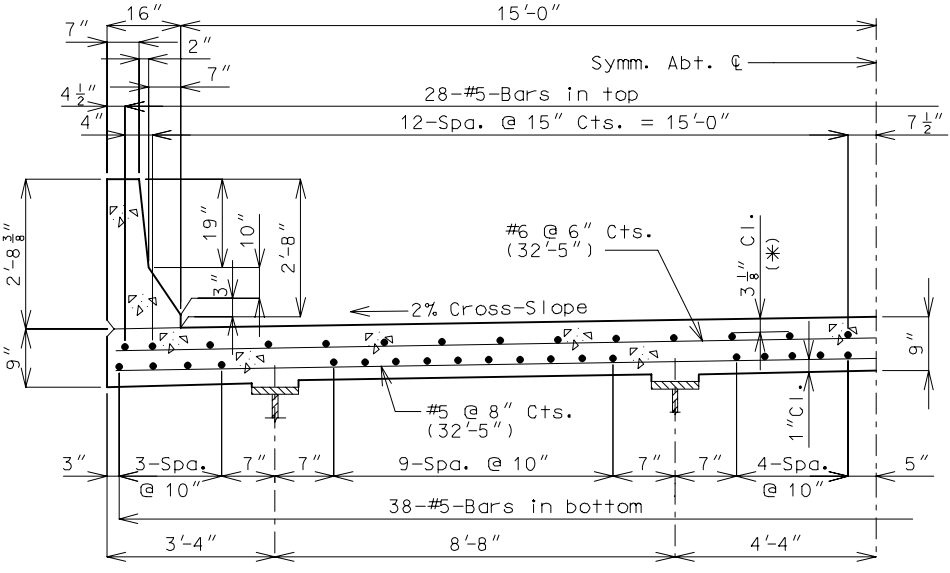

HL93 (30′-0″ ROADWAY - 4 GIRDER)

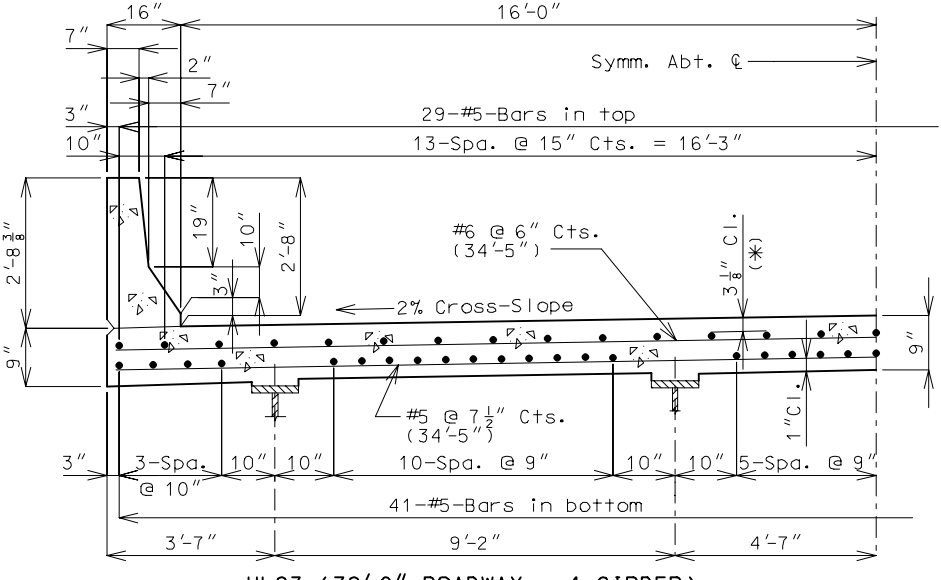

HL93 (32′-0″ ROADWAY - 4 GIRDER)

(✳) Cover will be less for other than #5 longitudinal bars.

Details of Concrete Slab on Girder (Cont.) **Slab on Girder**

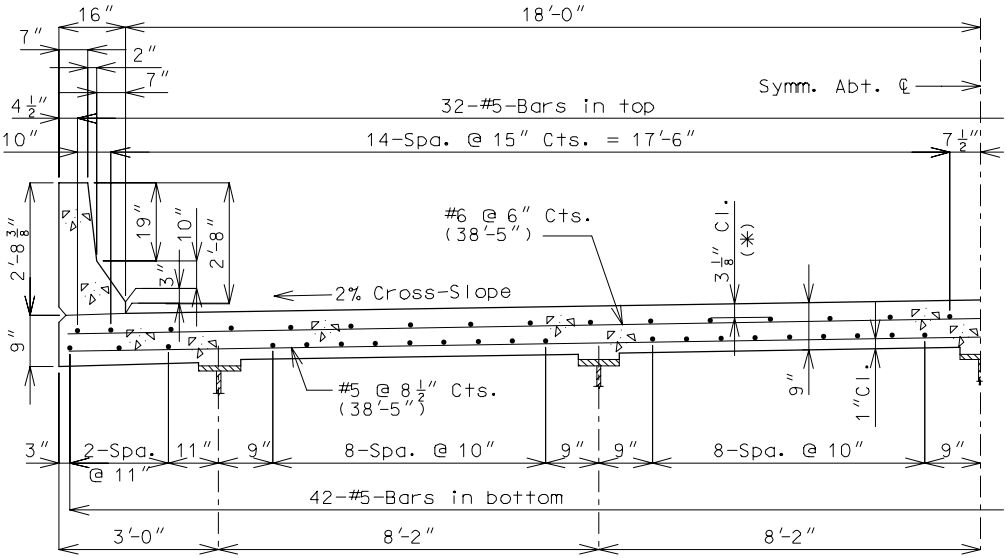

HL93 (36′-0″ ROADWAY - 5 GIRDER)

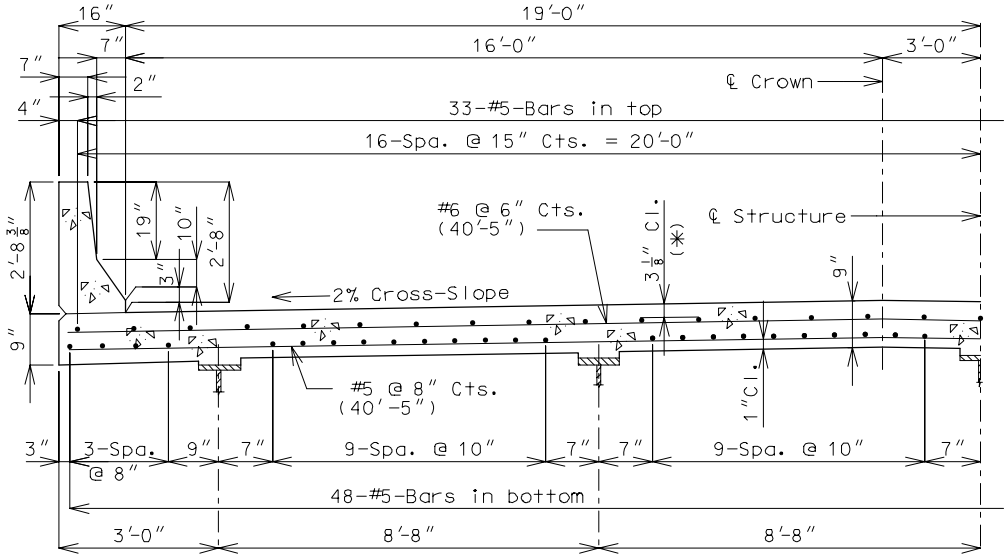

HL93 (38′-0″ ROADWAY - 5 GIRDER) (UNSYMMETRICAL)

(✳) Cover will be less for other than #5 longitudinal bars.

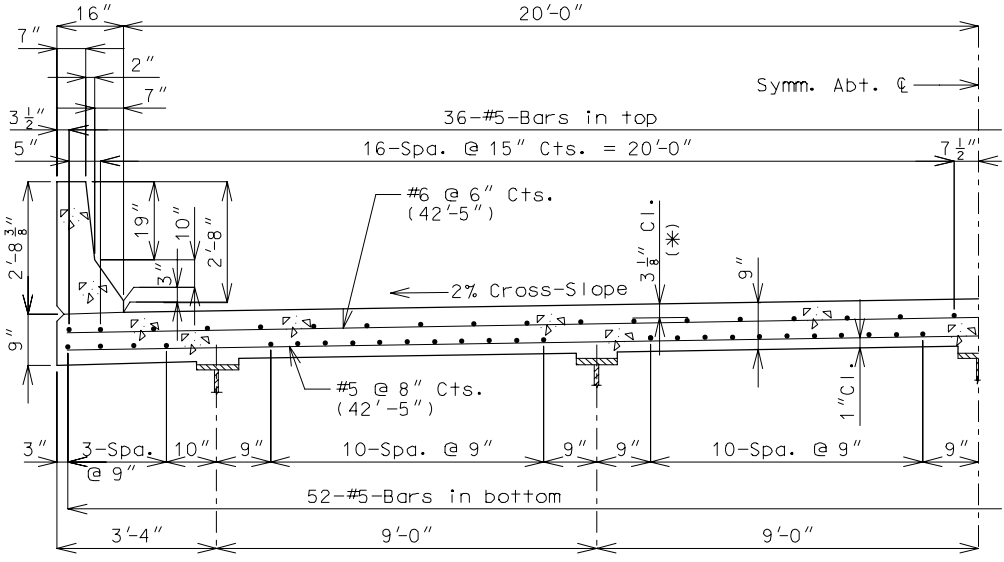

HL93 (40′-0″ ROADWAY - 5 GIRDER)

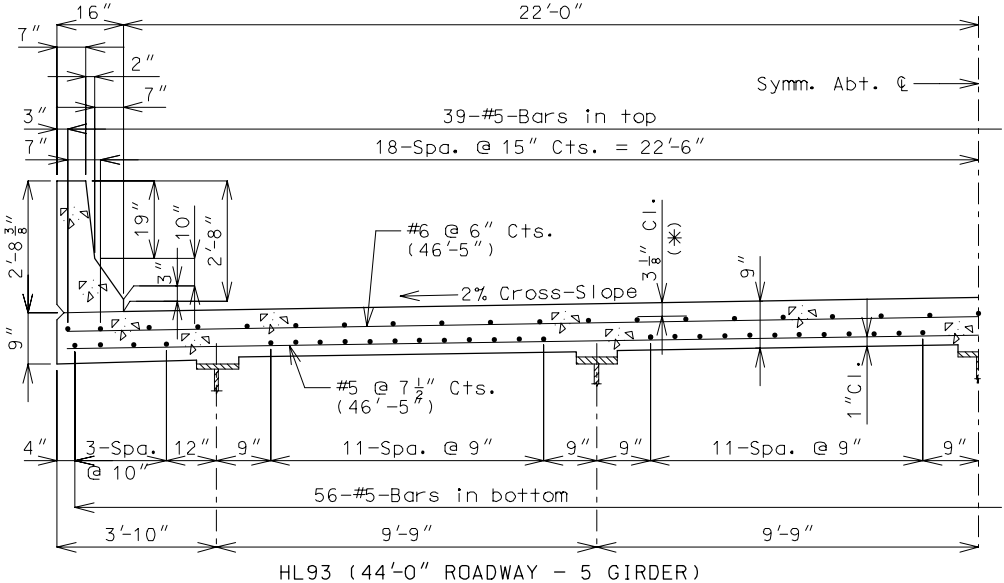

HL93 (44′-0″ ROADWAY - 5 GIRDER)

(✳) Cover will be less for other than #5 longitudinal bars.

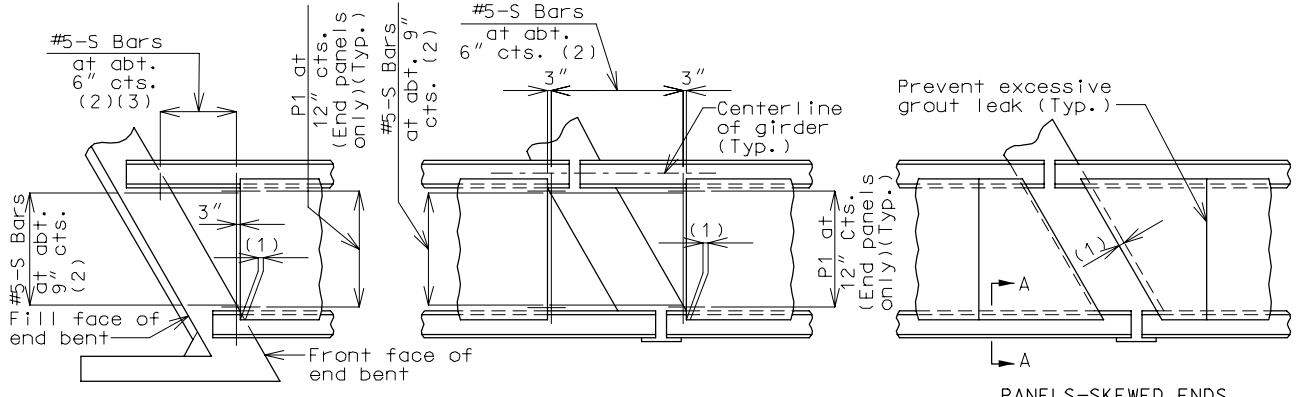

PLAN OF PRECAST PRESTRESSED PANELS PLACEMENT

(1) End panels shall be dimensioned 1" min. to 1-1/2" max. from the inside face of diaphragm.

(2) S-Bars shown are bottom steel in slab between panels and used with squared end panels only.

(3) Extend S-Bars 18 inches beyond the front face of end bents only.

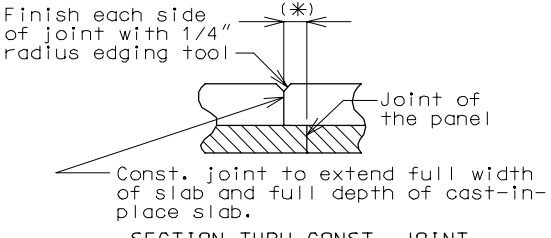

SECTION THRU CONST. JOINT

✳ Adjust the permissible construction joint to a clearance of 6 inches minimum from the joints of the panels.

Note: All reinforcement other than prestressing strands shall be epoxy coated.

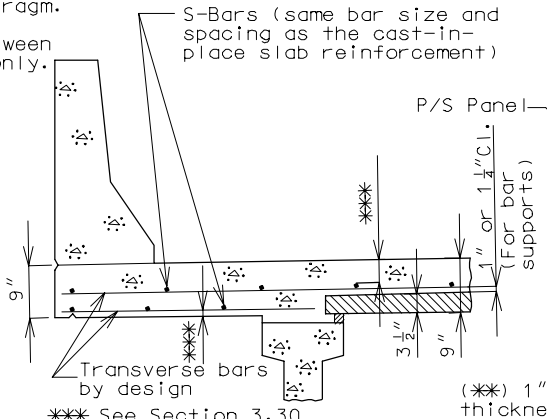

✳✳✳ See Section 3.30

SECTION THRU CANTILEVER

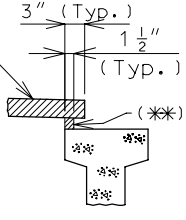

SECTION A-A

(✳✳) 1" Min. thru 2" max. thickness and 1-1/2" width of preformed fiber expansion joint material or polystyrene bedding material