Missouri Department of Transportation

Bridge Division

Bridge Design Manual

Section 3.90

Revised 10/01/2004

Click Here for Index

Index

3.90.1 Typical Sections of Concrete Repairs

1.1 Resurfacing
1.2 Special Repair Zones
1.3 Substructure Repair
1.4 Deck Repair (2 sheets)
1.5 Filled Joints (3 sheets)
1.6 Temporary Traffic Control Device

3.90.2 Dimensions

2.1 Concrete Wearing Surface (5 sheets)

3.90.3 Curb Treatments

3.1 Replacement of Brush Curb with Safety Barrier Curb (2 sheets)
3.2 Replacement of Existing Curb Using Anchor Systems (4 sheets)
3.3 Replacement of Existing Curb with Thrie Beam Rail (10 sheets)

3.90.4 Drainage

4.1 Slab Drain Details (7 sheets)

3.90.5 Widening

5.1 Closure Pour

3.90.6 Design Guide Considerations

6.1 Design Considerations (2 pages)

RESURFACING
PARTIAL OVERLAY REPLACEMENT

Typical Sections of Concrete Repairs

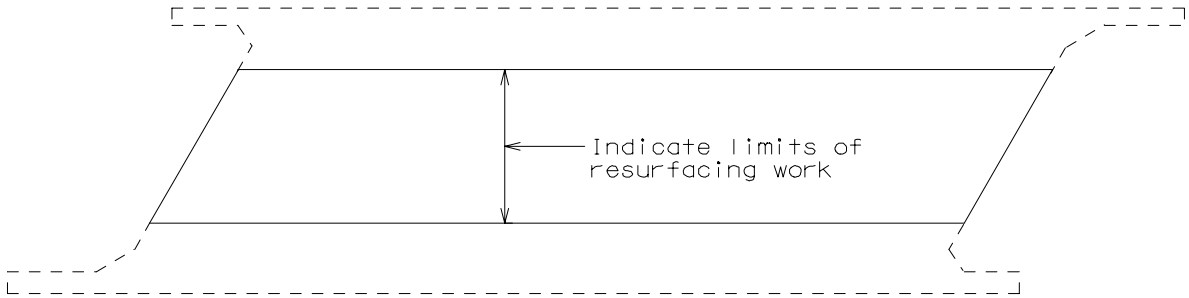

PLAN

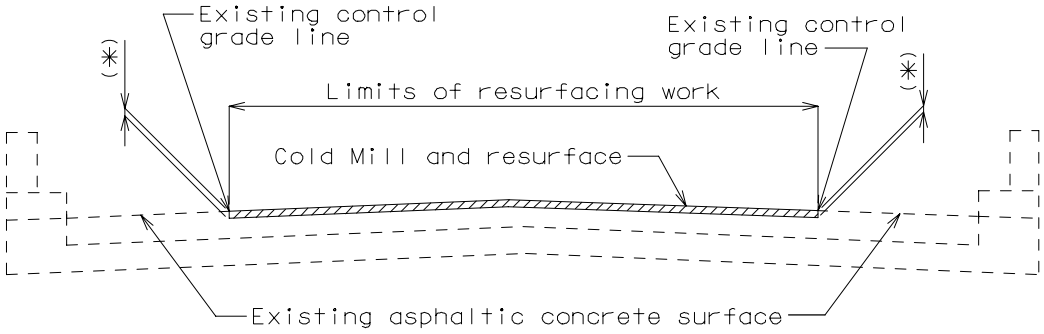

SECTION THRU ROADWAY

Place the following notes on plans.

The existing asphaltic concrete surface shall be removed to a uniform grade line (*) below the existing control grade line as noted.

Resurface with (*) asphaltic concrete.

(*) Depth of asphaltic concrete as specified in the Design Layout.

SPECIAL REPAIR ZONES **Typical Sections of Concrete Repairs**

The following order of repair zones are to be used for the deck repair on continuous concrete structures.

Zones with the same letter designation may be repaired at the same time. Sequence of repairs follows zone A, zone B then zone C.

Zone A is to be completed before Zone B and Zone B before Zone C, etc.

Any repair in the remainder of the bridge that is adjacent to Zone A shall be completed prior to work in Zone A.

If an excessive number of zones are required at one bent, See the Structural Project Manager.

Consider combining zones if it is ≤ 24″.

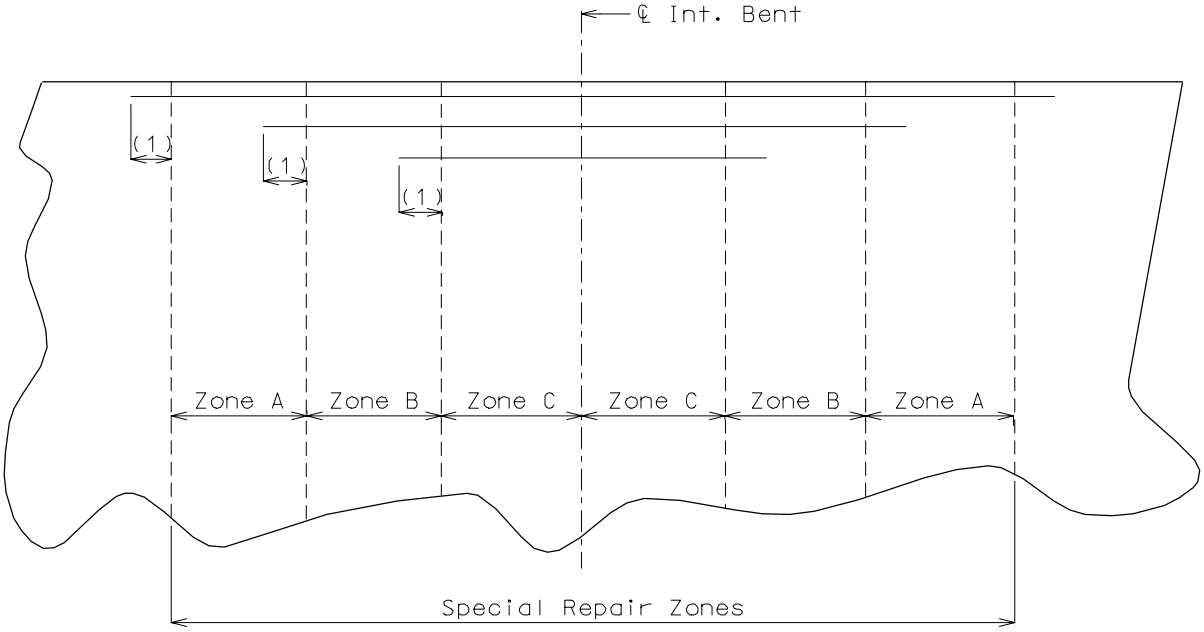

PART PLAN OF SLAB SHOWING REPAIR ZONES

(1) Development length.

See Bridge Manual Section 4 Office Notes for appropriate notes.

DETAILS SHOWING SUBSTRUCTURE REPAIR AREAS

DECK REPAIR **Typical Sections of Concrete Repairs**

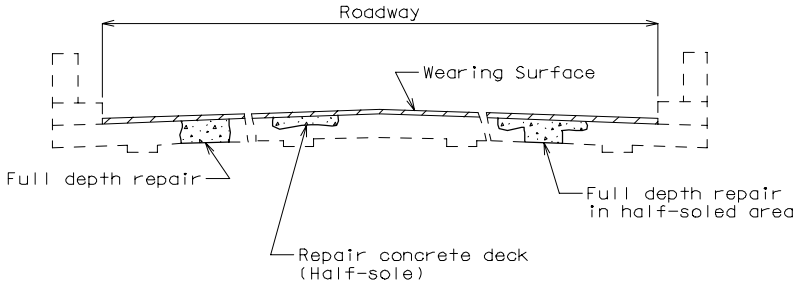

SECTION THRU ROADWAY

TOTAL SURFACE HYDRO DEMOLITION DECK REPAIR

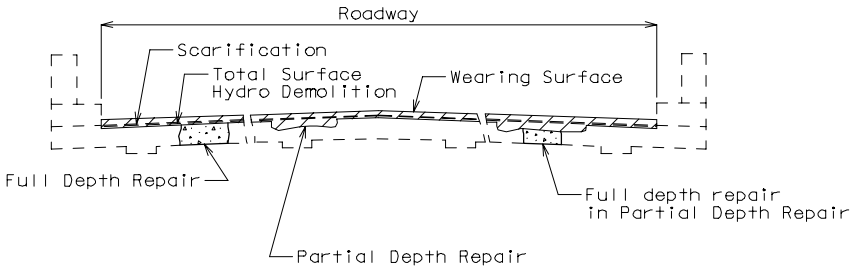

SECTION THRU ROADWAY

DECK REPAIR (CONT.) **Typical Sections of Concrete Repairs**

TYPICAL SECTION THRU EXISTING SLABS (NEAR ℄ SPAN)

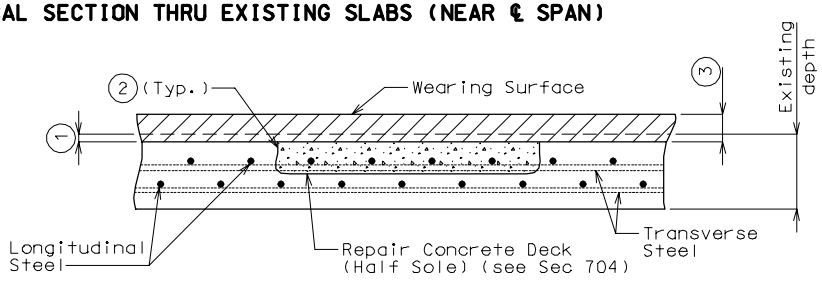

HALF-SOLED AREA

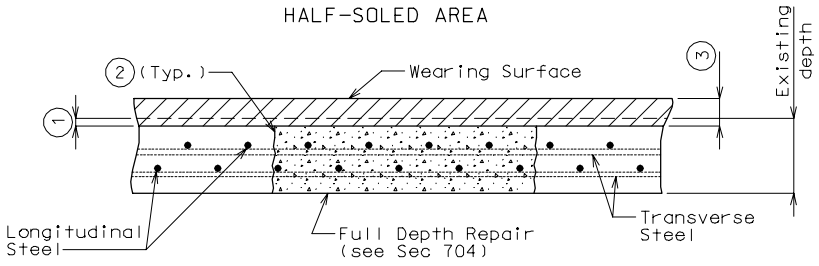

FULL DEPTH REPAIR

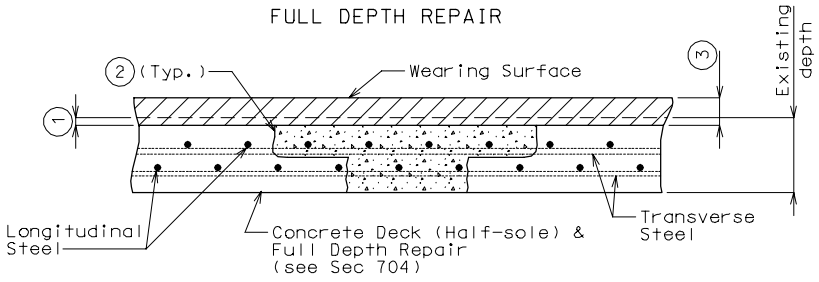

FULL DEPTH REPAIR IN HALF-SOLED AREA

1. Scarify existing slab. See the Design Layout for the minimum depth of scarification for the Concrete Wearing Surface. Scarification not required for Asphaltic Concrete Wearing Surface and Epoxy Polymer Concrete Overlay.

2. Saw cut, chip, or hydroblast vertically first 1″ for all deck repair.

3. 1/4″ (min.) for Epoxy Polymer Concrete Overlay.
   1-3/4″ (min.) for Latex Modified Concrete.
   2-1/4″ (min.) for Low Slump Concrete or Silica Fume Concrete.

DECK REPAIR (CONT.) **Typical Sections of Concrete Repairs**

TYPICAL SECTION THRU EXISTING SLABS (NEAR ℄ SPAN)

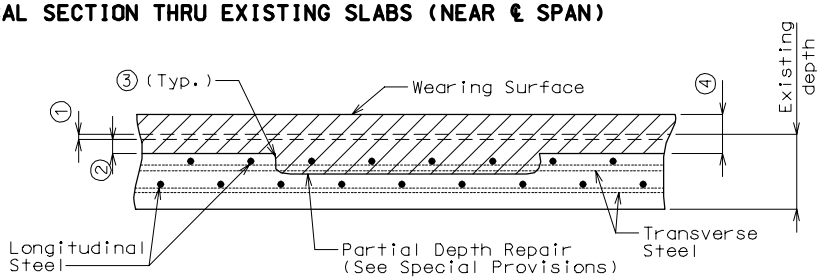

Partial Depth Repair

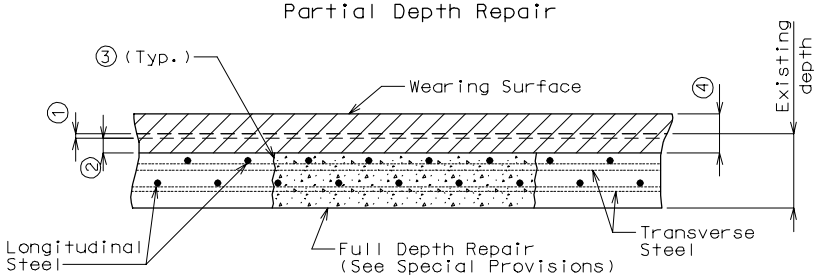

FULL DEPTH REPAIR

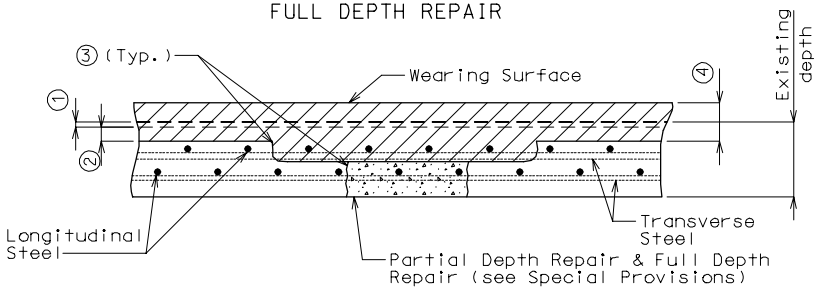

FULL DEPTH REPAIR IN PARTIAL DEPTH REPAIR

① Scarify existing slab. See the Design Layout for the minimum depth of scarification.

② Total surface hydro demolition of existing slab. See the Design Layout for the minimum depth of total surface hydro demolition.

③ Saw cut, chip, or hydro blast vertically first 1″ for all deck repair.

④ 1-3/4″ (min.) for Latex Modified Concrete.
2-1/4″ (min.) for Silica Fume Concrete.

FILLED JOINTS
LATEX, LOW SLUMP OR SILICA FUME

Typical Sections of Concrete Repairs

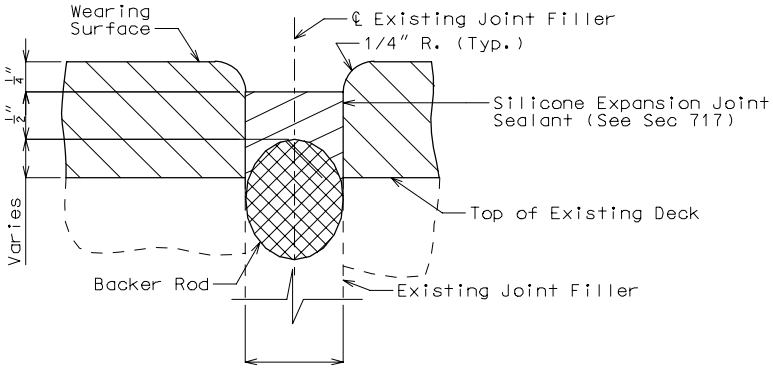

SECTION THRU JOINT

Typical Sections of Concrete Repairs

FILLED JOINTS (CONT.)
ASPHALTIC CONCRETE OVERLAY

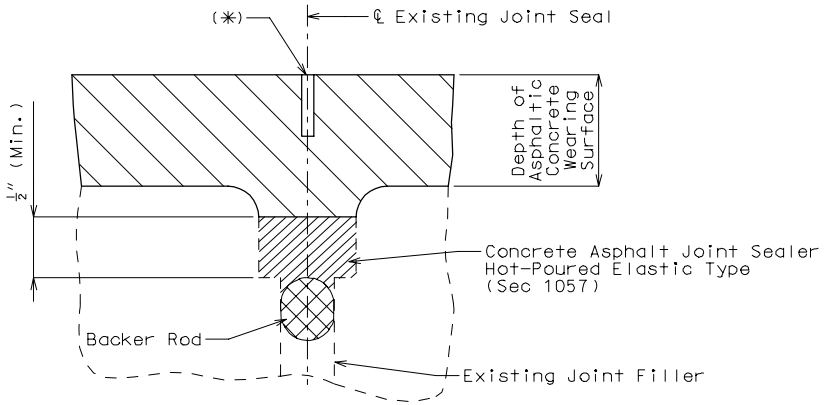

SECTION THRU JOINT

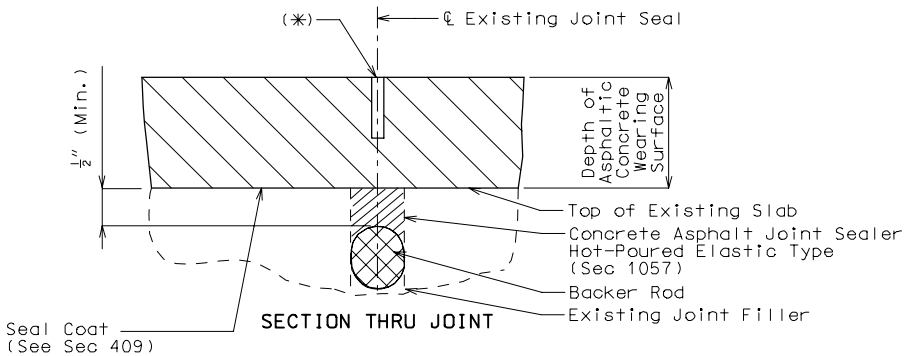

SECTION THRU JOINT

(✳) Saw cut 1″ deep and fill with concrete and asphalt joint sealer, hot-poured elastic type, in accordance with Sec 1057.

FILLED JOINTS (CONT.)
EPOXY POLYMER CONCRETE OVERLAY

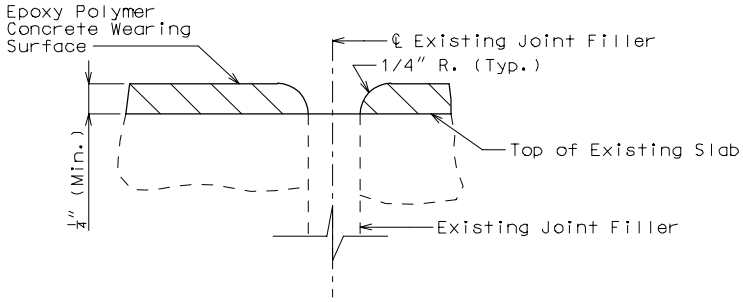

SECTION THRU JOINT

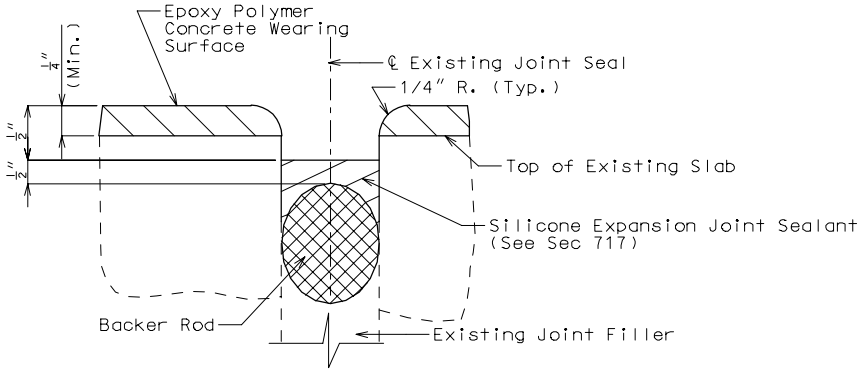

SECTION THRU JOINT

TEMPORARY TRAFFIC CONTROL DEVICE **Typical Sections of Concrete Repairs**

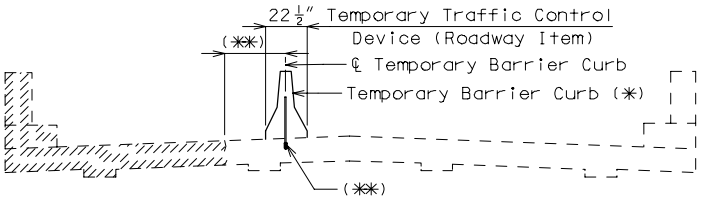

(✳) Show Barrier Curb as per District recommendation. Typically Barrier Curb is shown when structure is on interstate and/or the rail is being removed. Otherwise, show the dimension lines with 2'-0" dimension.

(✳✳) If this dimension is less than 45.3", the temporary curb may have to be doweled in, check with Structural Project Manager.

SECTION THRU ROADWAY

CONCRETE WEARING SURFACE
REPLACEMENT OF EXISTING EXPANSION DEVICE
PREFORMED COMPRESSION JOINT SEAL
(STRIP SEAL & SILICONE EXPANSION SEALANT DETAILS ARE SIMILAR)

Dimensions

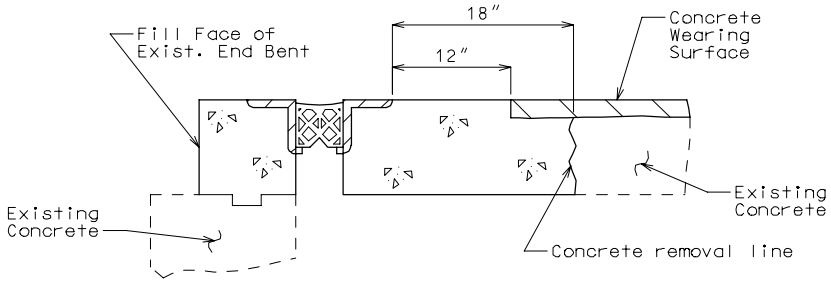

LOW SLUMP, SILICA FUME, LATEX OR ASPHALTIC CONCRETE WEARING SURFACE

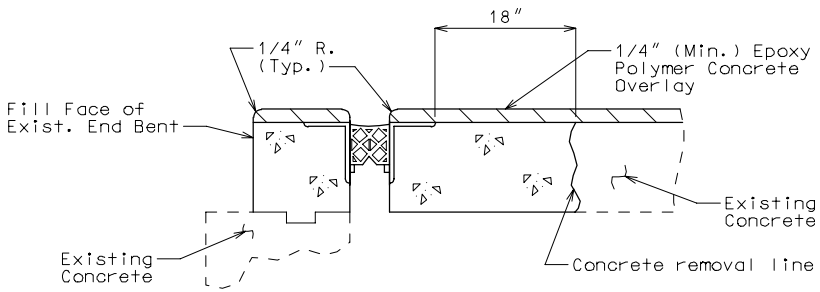

Note:
The contractor shall exercise care to ensure that spillage over joint edges is prevented and that a neat line is obtained along any terminating edge of the epoxy polymer concrete.

EPOXY POLYMER CONCRETE WEARING SURFACE

Note:
Concrete overlay shall be forced into the cavity under the armor angle. Proper consolidation of the concrete shall be achieved by localized internal vibration.

When concrete is removed and expansion device armor is replaced, see Section 3.35 of this manual for the appropriate expansion device.

CONCRETE WEARING SURFACE (CONT.)
TYPICAL SECTION OF ELASTOMERTIC EXPANSION DEVICE

Dimensions

When Low Slump, Silica Fume, Latex or Asphaltic Concrete wearing surface is used, the elastomeric joint must be replaced by another type of expansion device.

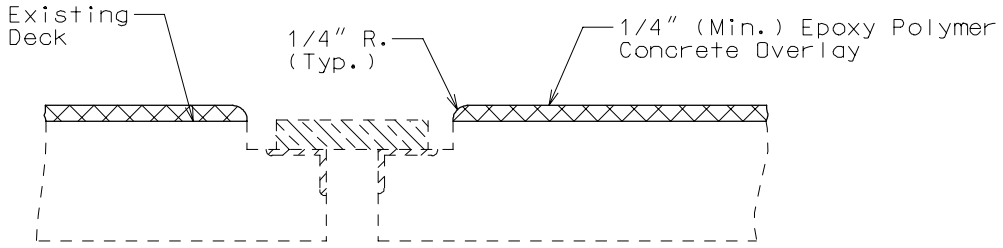

EPOXY POLYMER CONCRETE WEARING SURFACE

CONCRETE WEARING SURFACE (CONT.)
TYPICAL SECTIONS OF FLAT PLATE EXPANSION DEVICE

Dimensions

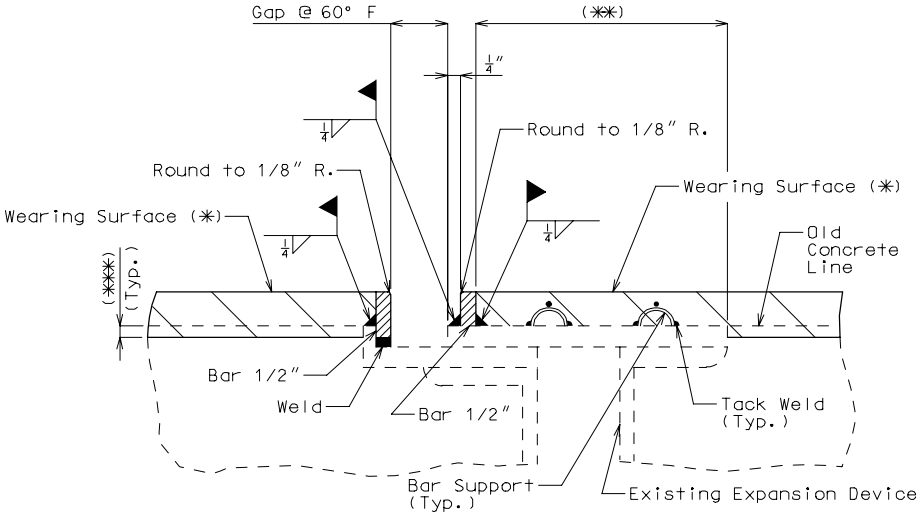

LOW SLUMP, SILICA FUME, LATEX OR ASPHALTIC CONCRETE WEARING SURFACE

(✱) Latex, Low Slump or Silica Fume Concrete Wearing Surface.

(✱✱) When this dimension exceeds 3" and a Concrete Wearing Surface is used, tack weld a one inch bar chair to the plate for each 3" of plate to be covered by the Wearing Surface.

(✱✱✱) Scarify existing slab. See the Design Layout for the minimum depth of scarification. Scarification not required for Asphalt Concrete Wearing Surface.

Note: See Standard Plans Drawing 712.40 for Steel Dams at Expansion Devices for Resurfacing Bridge Floors.

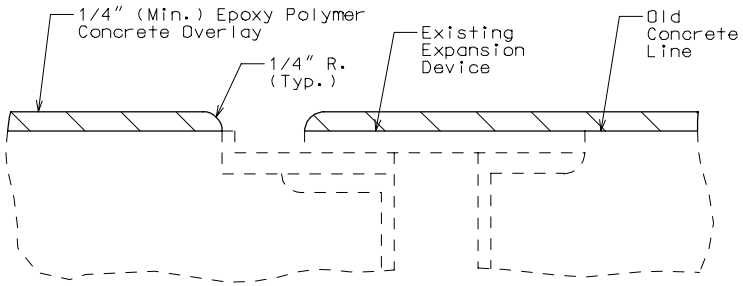

EPOXY POLYMER CONCRETE WEARING SURFACE

CONCRETE WEARING SURFACE (CONT.) **Dimensions**

LATEX, LOW SLUMP, SILICA FUME OR ASPHALTIC

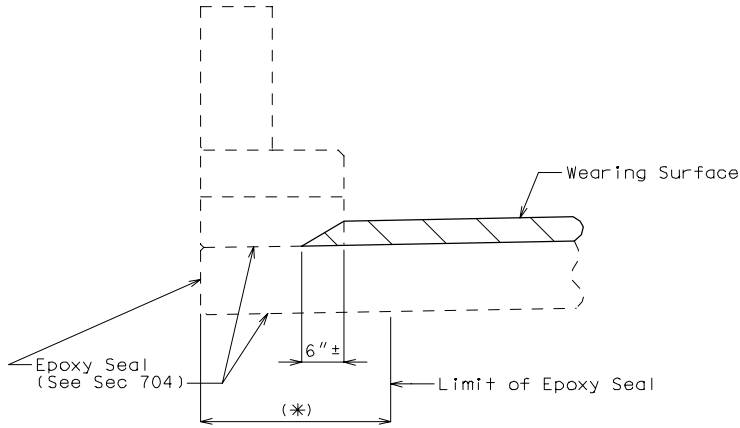

TYPICAL SECTION OF EXISTING
CURB SHOWING OUTLET

EPOXY POLYMER CONCRETE

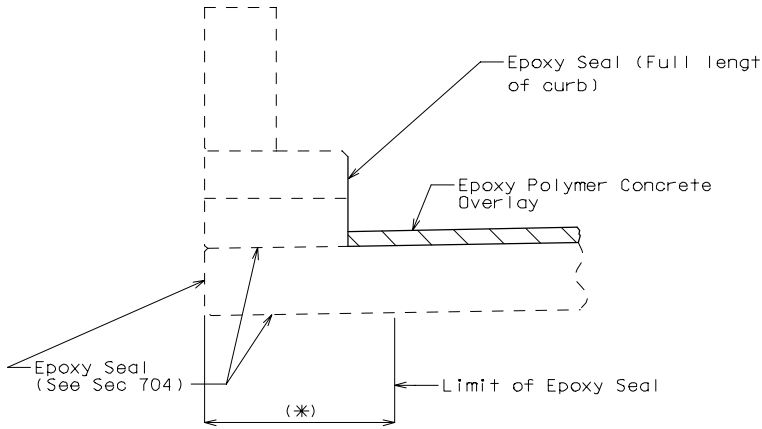

TYPICAL SECTION OF EXISITING
CURB SHOWING OUTLET

Note:
(✳) To edge of exterior girder or stringer or 2'-6" for bridges that do not have girders or stringers except with thrie beam rail use 4'-0". Do not use Epoxy Seal with Asphalt Overlays unless specified on the Design Layout.

CONCRETE WEARING SURFACE (CONT.) **Dimensions**

LATEX, LOW SLUMP, SILICA FUME, ASPHALTIC OR EPOXY POLYMER

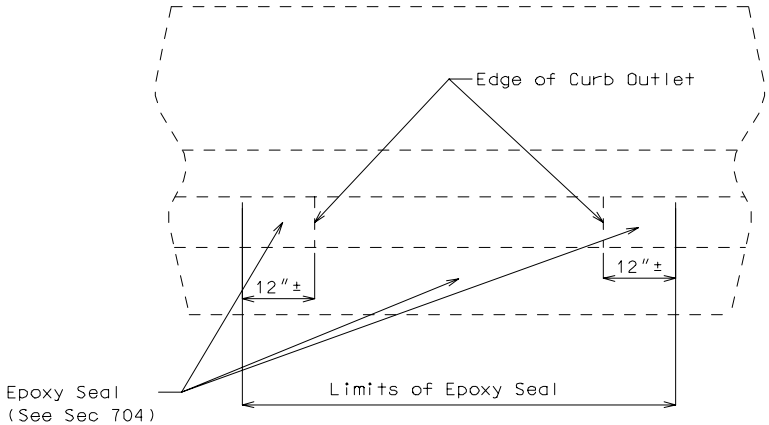

TYPICAL ELEVATION OF EXISTING
CURB SHOWING OUTLET

CONCRETE WEARING SURFACE (CONT.) **Dimensions**
SLAB EDGE REPAIR

If slab edge repair is specified on the Design Layout when the barrier curb is not removed or when full depth repair is not a pay item, the following detail shall be provided.

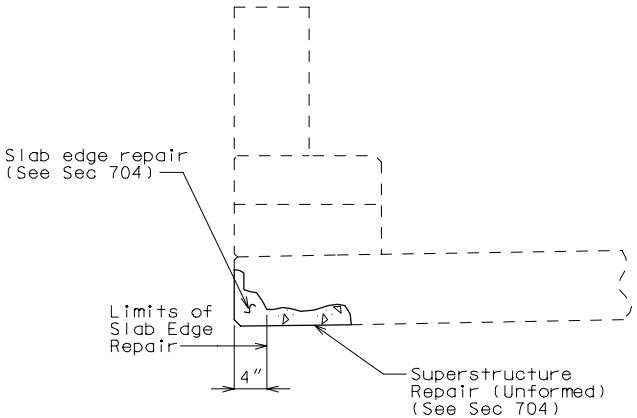

CONCRETE EDGE REPAIR

If the barrier curb is removed when full depth repair and slab edge repair are pay items, the following detail shall be provided.

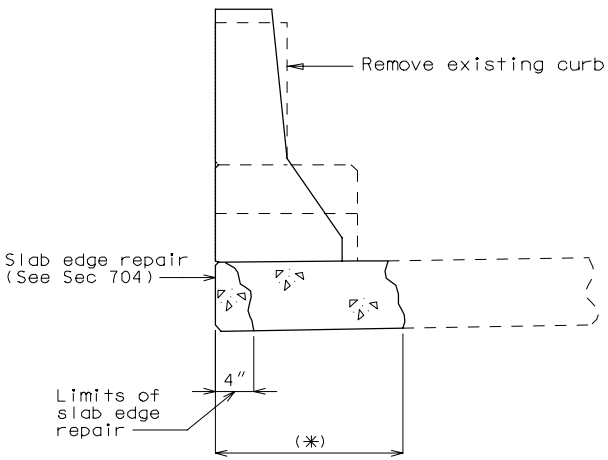

CONCRETE EDGE REPAIR

(*) If the dimension exceeds 4", the repair extending to the edge of slab will be paid for as Full Depth Repair. (See Sec 704)

REPLACEMENT OF BRUSH CURB WITH SAFETY BARRIER CURB
NON-INTEGRAL END BENTS

Curb Treatments

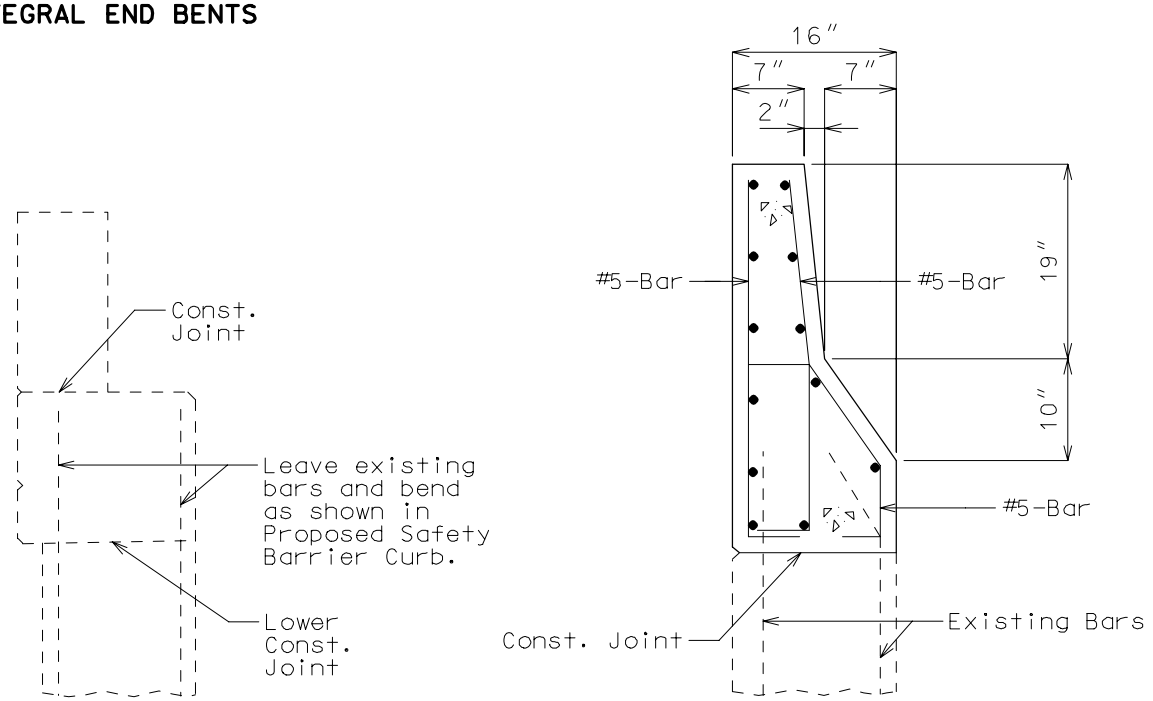

EXISTING BRUSH BURB PROPOSED SAFETY BARRIER CURB

SECTIONS THRU WING

Note: Remove existing Brush Curb above lower Const. Joint.
For details not shown, see Section 3.30 of this manual.

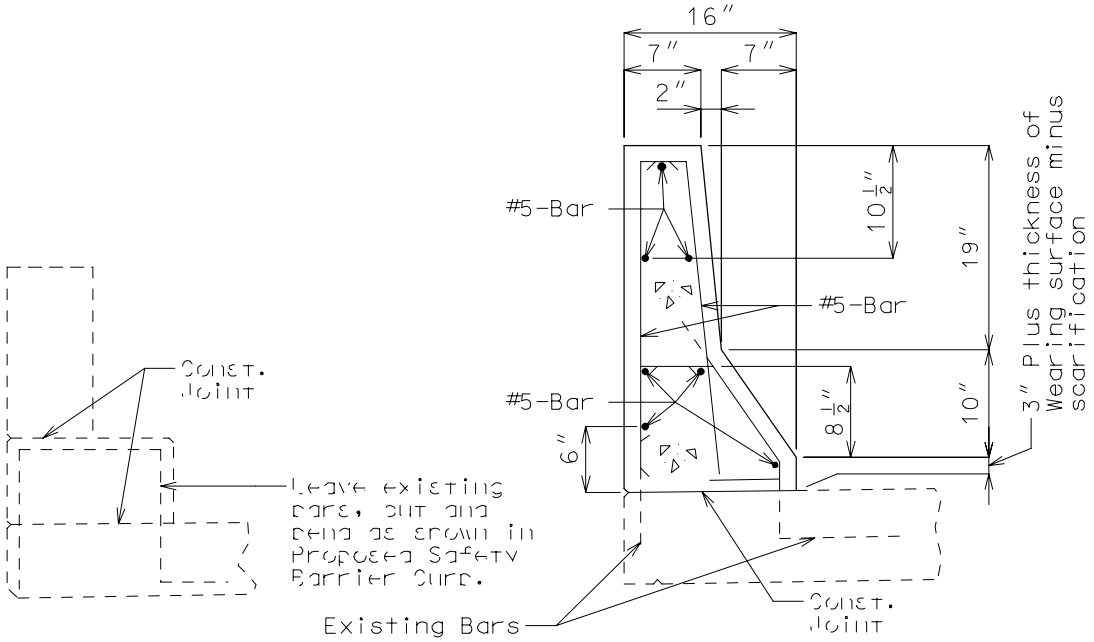

EXISTING BRUSH CURB PROPOSED SAFETY BARRIER CURB

SECTIONS THRU SLAB

REPLACEMENT OF BRUSH CURB WITH SAFETY BARRIER CURB (CONT.) **Curb Treatments**
INTEGRAL END BENTS

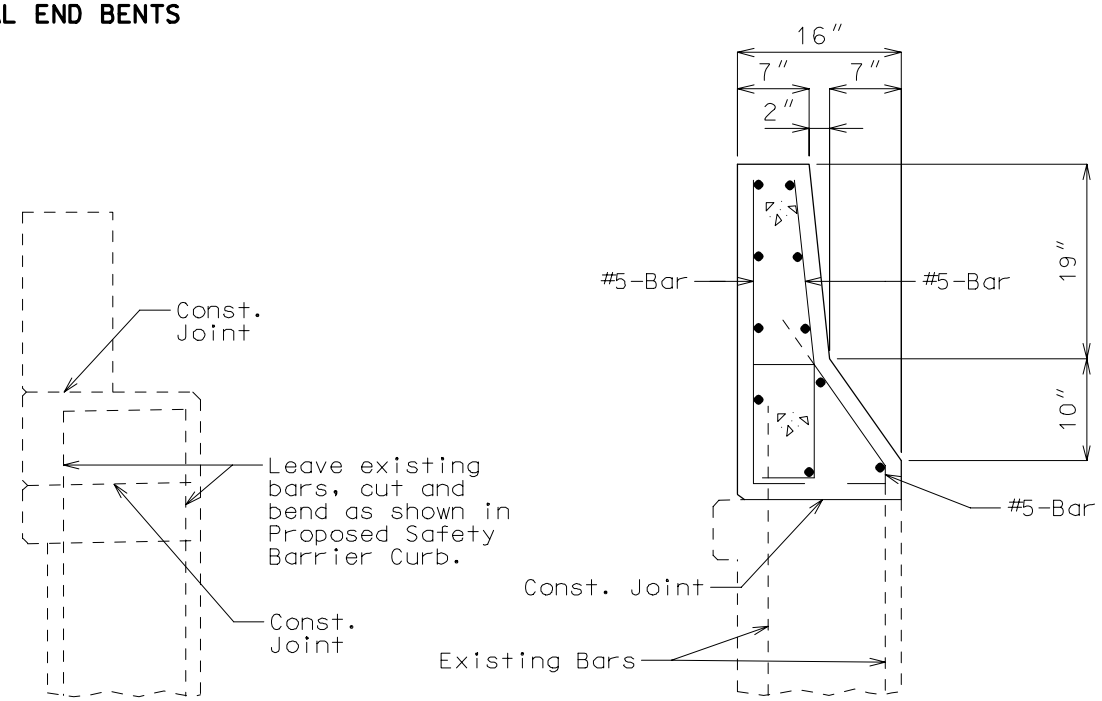

EXISTING BRUSH CURB PROPOSED SAFETY BARRIER CURB

SECTIONS THRU WING

Note: Remove existing Brush Curb above lower Const. Joint.
For details not shown, see section 3.30 of this manual.

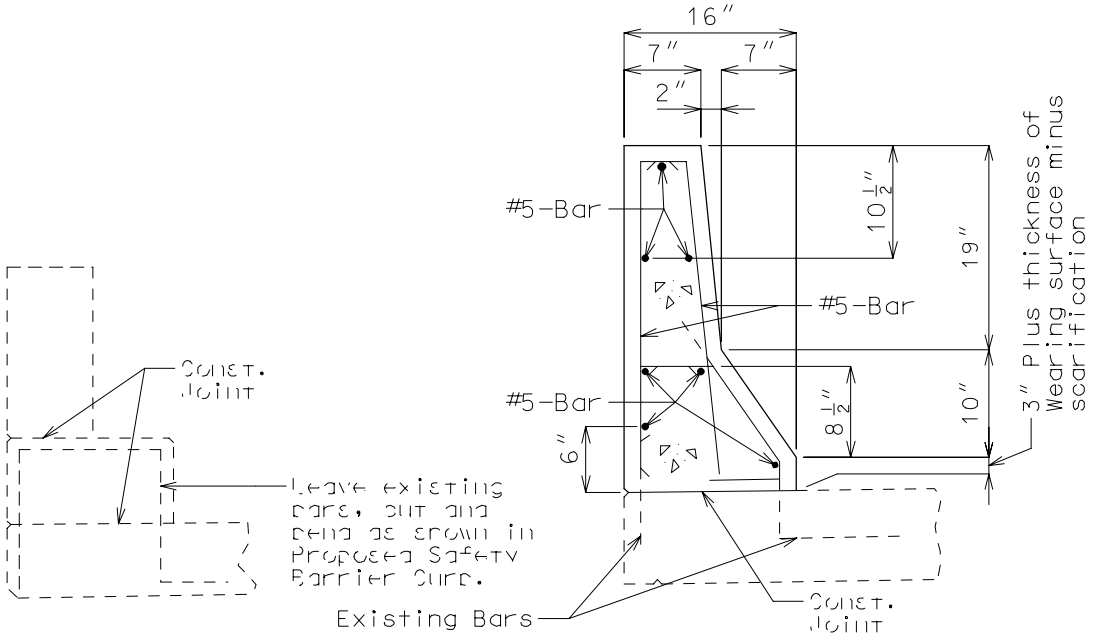

EXISTING BRUSH CURB PROPOSED SAFETY BARRIER CURB

SECTIONS THRU SLAB

REPLACEMENT OF EXISTING CURB (USING ANCHOR SYSTEMS)

Curb Treatments

SAFETY BARRIER CURB ON SLAB

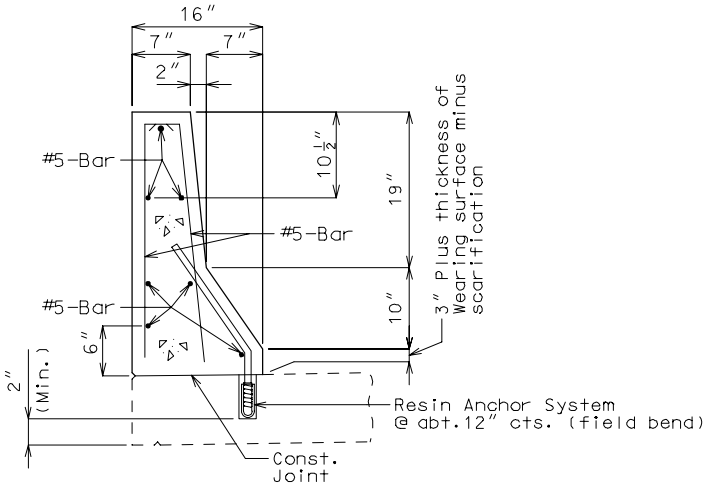

SECTION THRU CURB

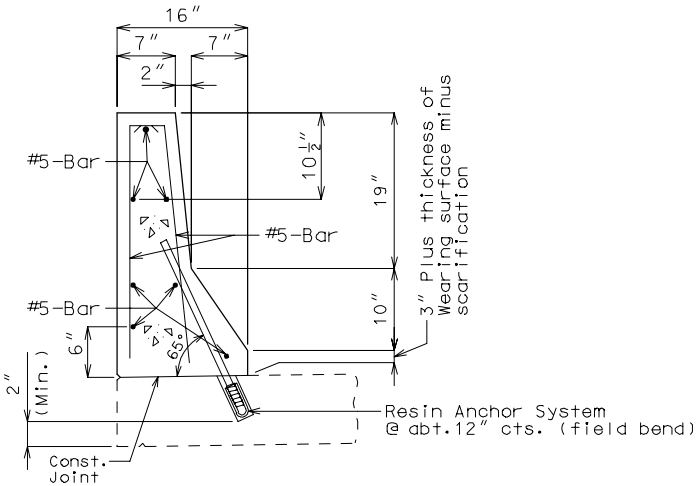

SECTION THRU CURB
(OPTIONAL ANCHORING SYSTEM)

Note: See Bridge Manual Section 4.0 for appropriate notes.

REPLACEMENT OF EXISTING CURB (CONT.)
(USING ANCHOR SYSTEMS)

Curb Treatments

SAFETY BARRIER CURB ON WING

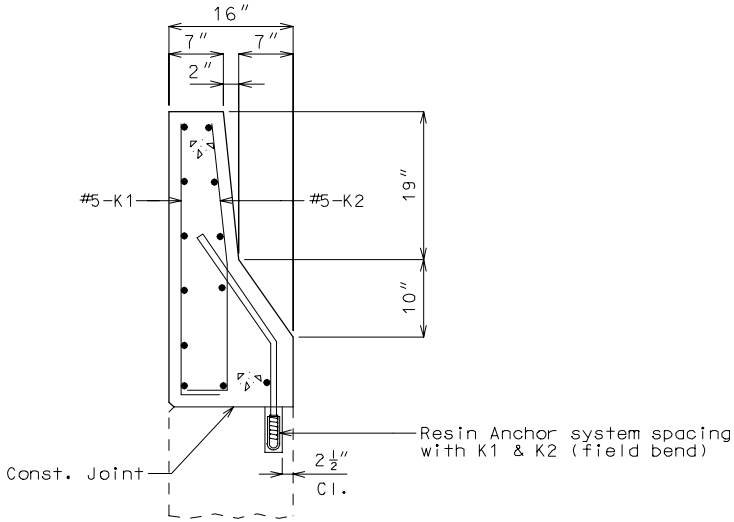

SECTION THRU CURB (✳)

(✳) Non-Integral End Bent shown,
Integral End Bents similar.

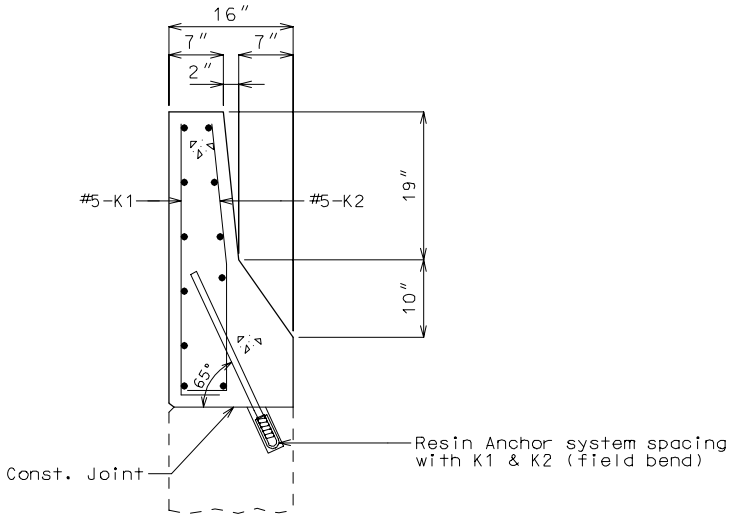

SECTION THRU CURB (✳)
(OPTIONAL ANCHORING SYSTEM)

Note: See Bridge Manual Section 4.0 for appropriate notes. For details not shown, see section 3.30 of this manual.

REPLACEMENT OF EXISTING CURB AT END OF WING (USING ANCHOR SYSTEMS)

INTEGRAL END BENTS

(✳) Extend existing horizontal bars 2'-3" into new concrete.

(✳✳) Fit bar to follow transition face of curb.

Note: For details of Guard Rail Attachment, see Sec. 3.30

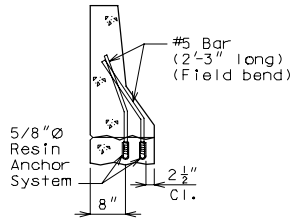

ANCHOR SYSTEMS AT SECTION C-C

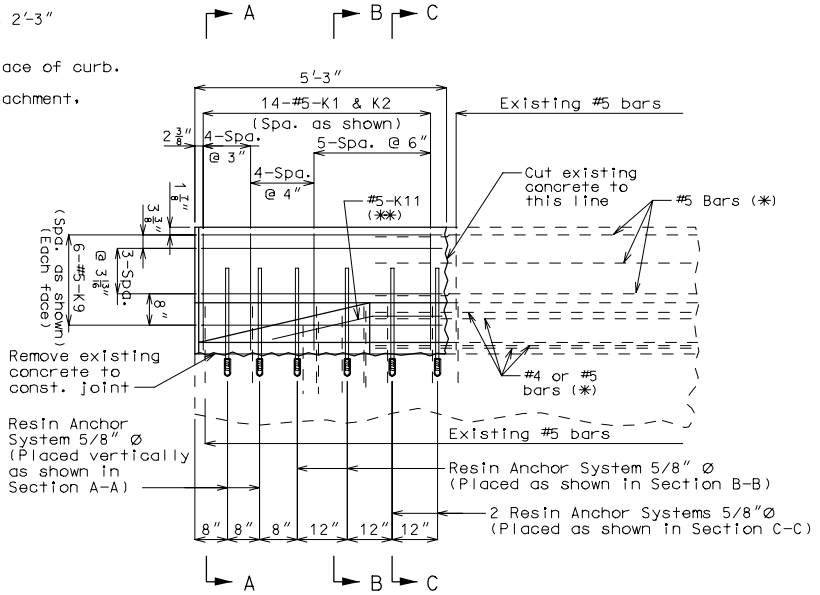

PART ELEVATION

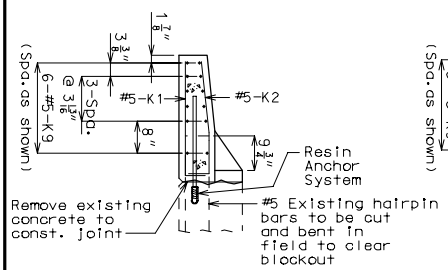

SECTION A-A

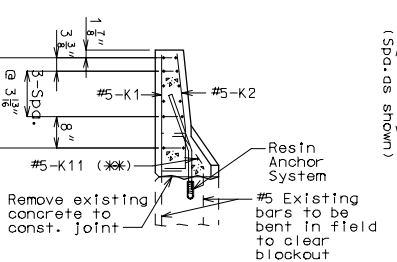

SECTION B-B

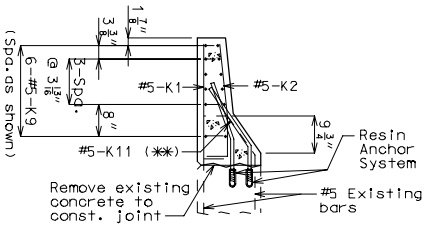

SECTION C-C
(Horizontal bars are not shown for clarity)

REPLACEMENT OF EXISTING CURB AT END OF WING (USING ANCHOR SYSTEMS) NON-INTEGRAL END BENTS

(✳) Extend existing horizontal bars 2'-3" into new concrete.

(✳✳) Fit bar to follow transition face of curb.

Note: For details of Guard Rail Attachment, see Sec. 3.30.

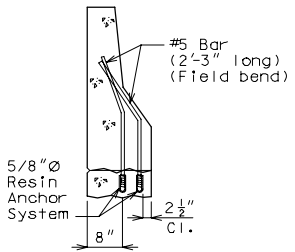

ANCHOR SYSTEMS AT SECTION C-C

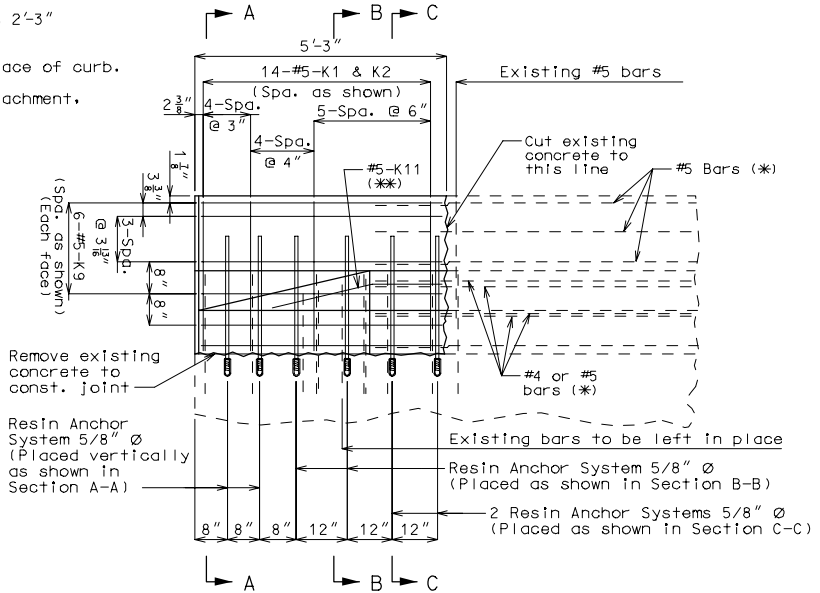

PART ELEVATION

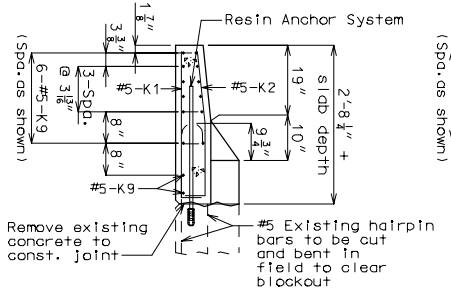

SECTION A-A

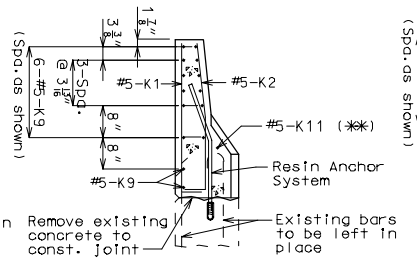

SECTION B-B

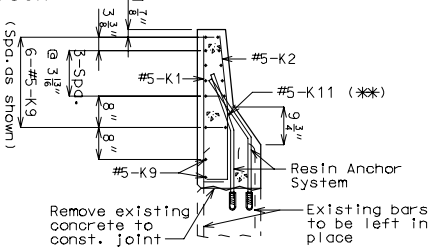

SECTION C-C
(Horizontal bars are not shown for clarity)

SYSTEM 2: REPLACEMENT OF EXISTING CURB WITH THRIE BEAM RAIL

TYPICAL CONNECTION

System 2: Applicable for rehabs only with slab depths 22" or greater.
These are typically voided slabs. Connection design load is 1.5 times plastic moment capacity (Mp) of W6 x 20 Post.

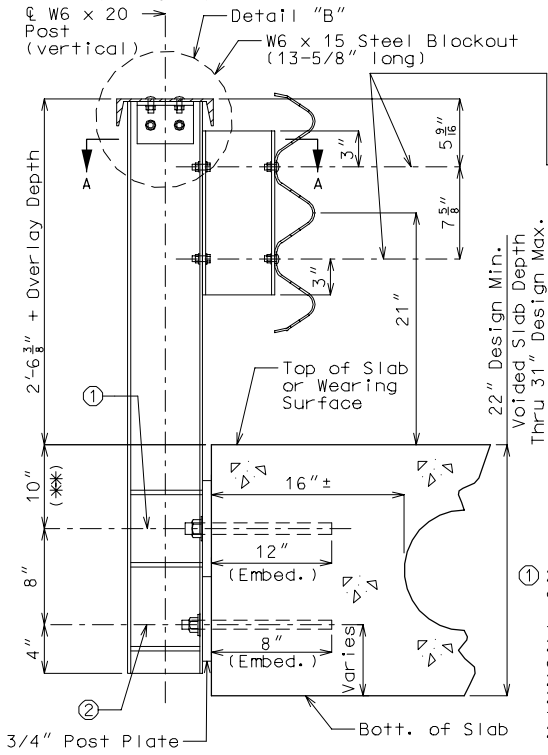

PART SECTION AT RAIL POST

Blockout-to-Post Conn.
℄ 2 Holes 13/16"Ø in W6 x 20 Post flange and W6 x 15 Blockout flange

℄ 2 Hex head bolt 5/8"Ø with two washers and hex nut in W6 x 20 Post flange

Thrie Beam-to-Blockout Conn.
℄ 13/16" x 2-1/2" Vertical slotted hole in W6 x 15 Blockout flange (✳)

℄ 5/8"Ø Carriage bolt with one flat washer and hex nut

(✳) Required on one side of web only, but may be provided on both sides of web at the contractor's option.

(✳✳) Use 10" from top of original slab (before any future wearing surface). For 20" voided slabs reduce to 8", see Structural Project Manager.

① 2 Resin Anchor Systems that shall have a minimum ultimate pullout strength (each) of 72 kip in concrete with f'c = 4,000 psi to include:
2 Drilled holes 1-1/8"Ø (min.) in slab or as recommended by manufacturer
2 Holes 1-1/4"Ø in post plate
2 Threaded rod 1"Ø A449 H.S. snug tight 12" embedment in slab.
2 Hardened locking washers 2-1/2"Ø

② 2 Resin Anchor Systems that shall have a minimum ultimate pullout strength (each) of 20.4 kip in concrete with f'c = 4,000 psi to include:
2 Drilled holes 7/8"Ø (min.) in slab or as recommended by manufacturer
2 Holes 1"Ø in post and post plate
2 Threaded rod 3/4"Ø A449 H.S. snug tight 8" embedment in slab.
2 Hardened locking washers

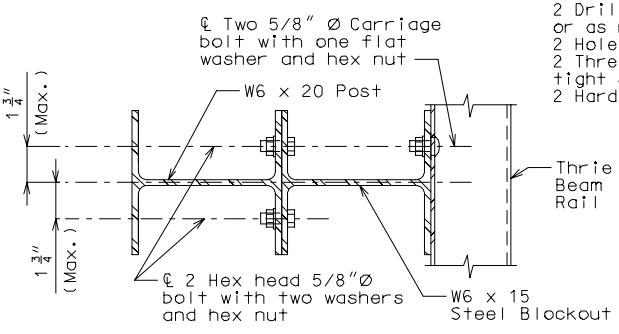

SECTION A-A

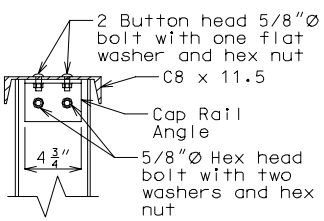

DETAIL "B"

Note: Design weight of (12 gage) Thrie Beam Bridge Rail = 35#/lin. ft.

SYSTEM 2: REPLACEMENT OF EXISTING CURB WITH THRIE BEAM RAIL (CONT.)

DETAILS OF POST PLATE

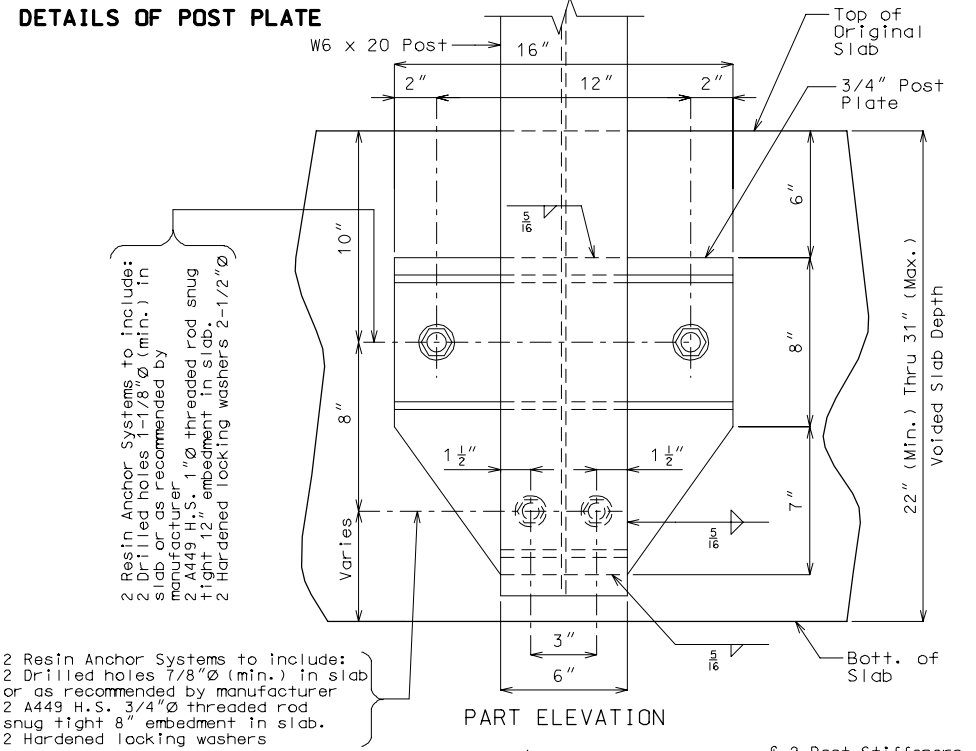

PART ELEVATION

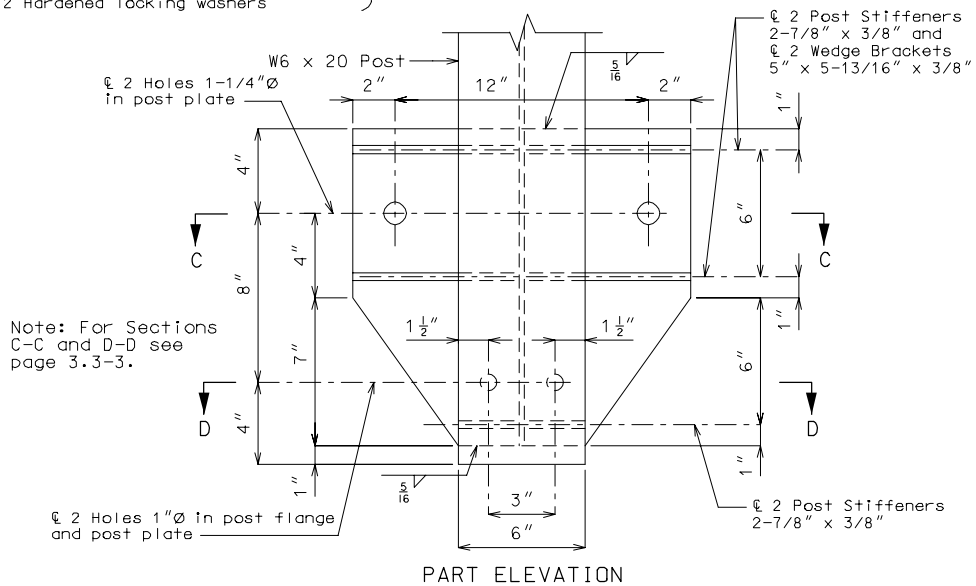

PART ELEVATION

SYSTEM 2: REPLACEMENT OF EXISTING CURB WITH THRIE BEAM RAIL (CONT.)

DETAILS OF POST

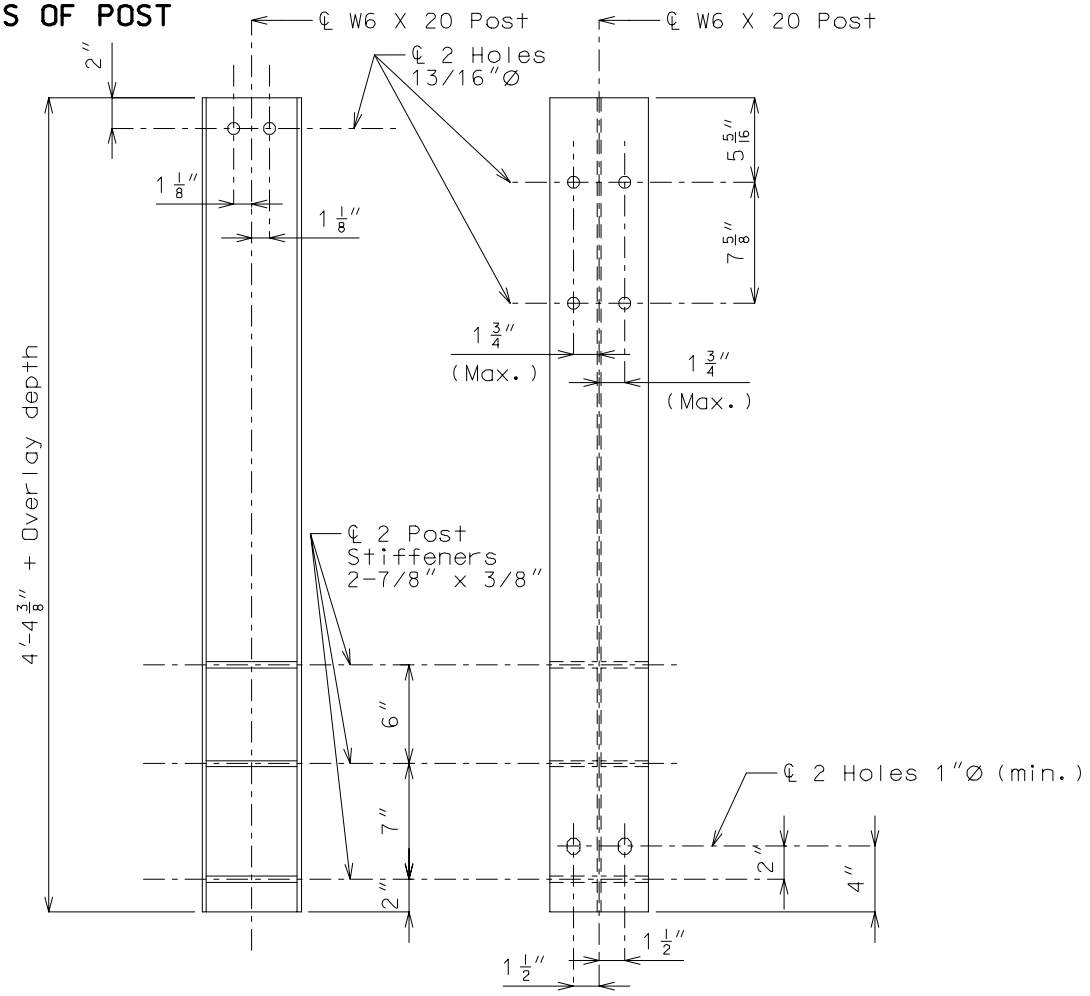

DETAILS OF POST

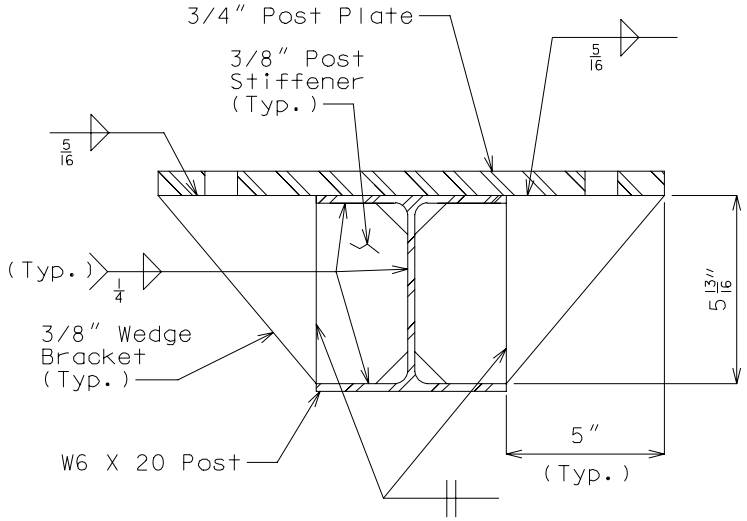

SECTION C-C

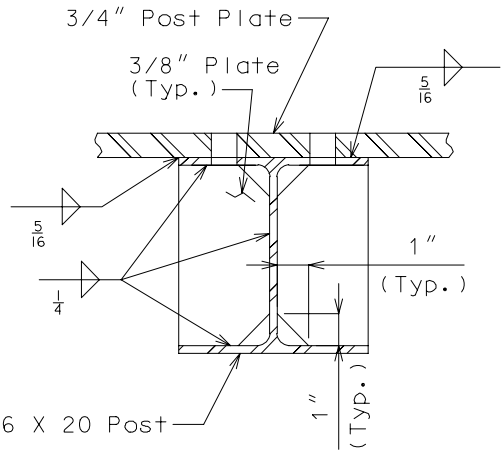

SECTION D-D

Note: For location of Sections C-C and D-D see page 3.3-2.

SYSTEM 3: REPLACEMENT OF EXISTING CURB WITH THRIE BEAM RAIL TYPICAL CONNECTION

System 3: Applicable for rehab and widenings with slab depths between 8-1/2" and 19" inclusive. Connection design load is 1.5 times plastic moment capacity (Mp) of W6 x 20 Post. Vertical clearance must be checked due to obtruding lower connection.

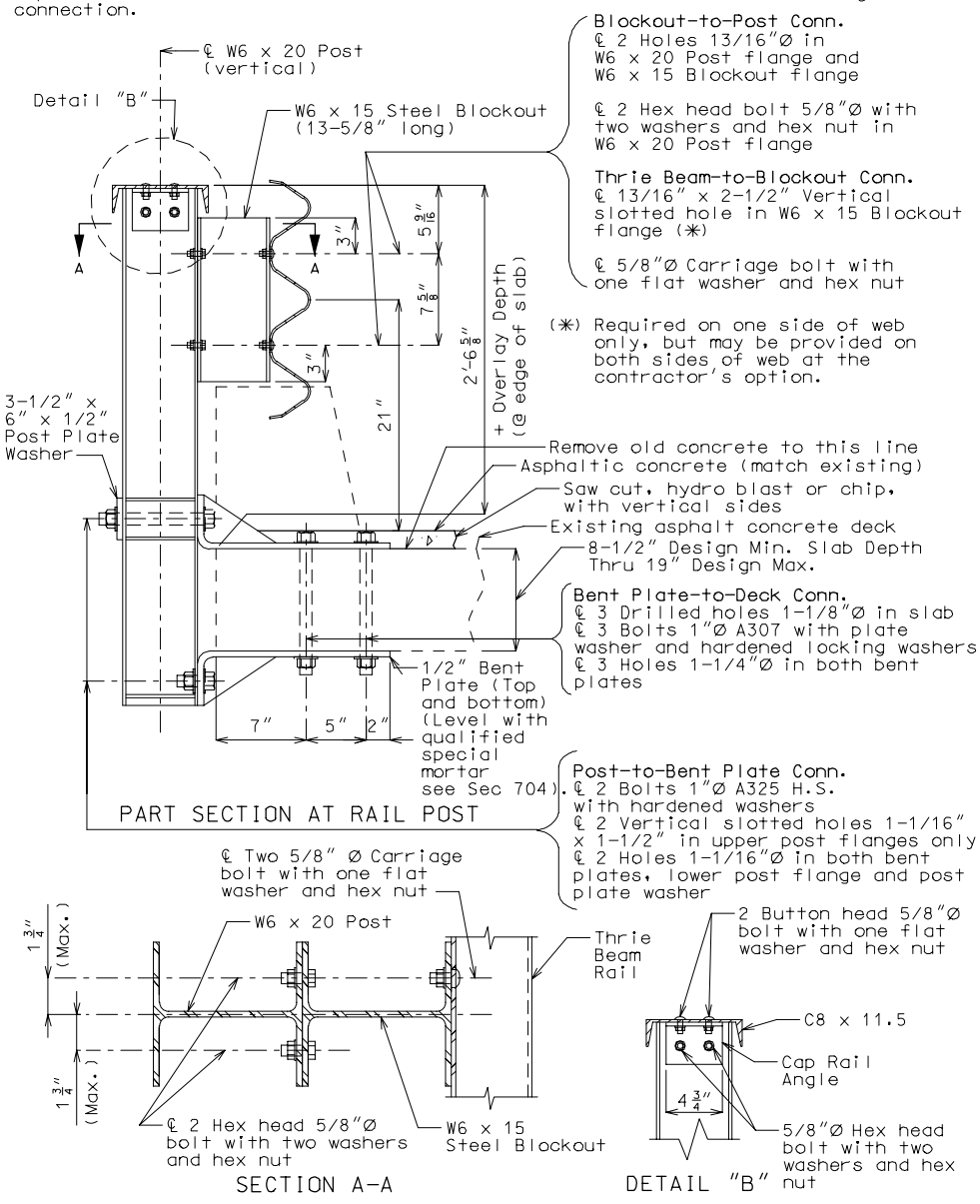

Note: Design weight of (12 gage) Thrie Beam Bridge Rail = 35#/lin. ft.

SYSTEM 3: REPLACEMENT OF EXISTING CURB WITH THRIE BEAM RAIL (CONT.)
DETAILS OF BENT PLATE

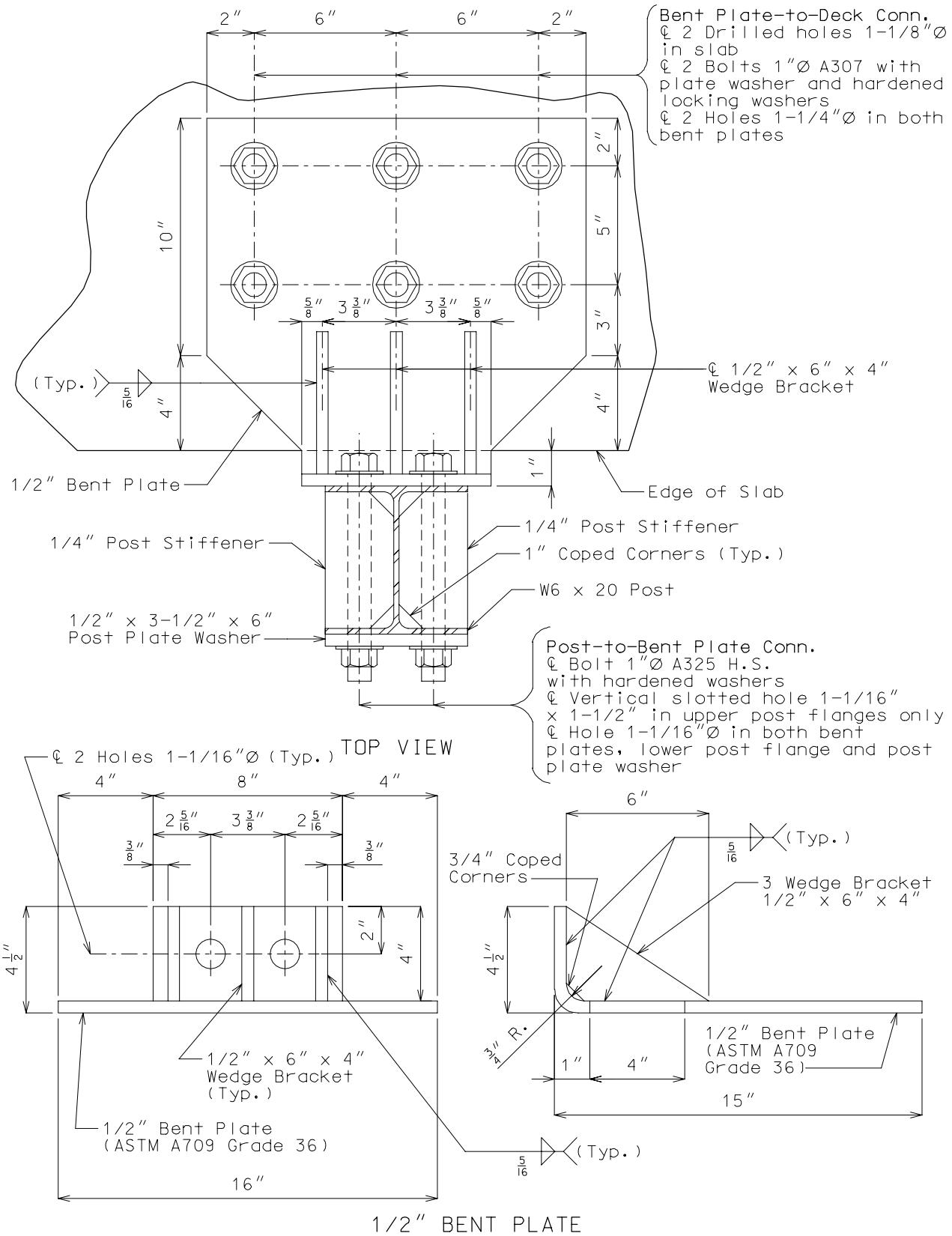

SYSTEM 3: REPLACEMENT OF EXISTING CURB WITH THRIE BEAM RAIL (CONT.)
DETAILS OF POST

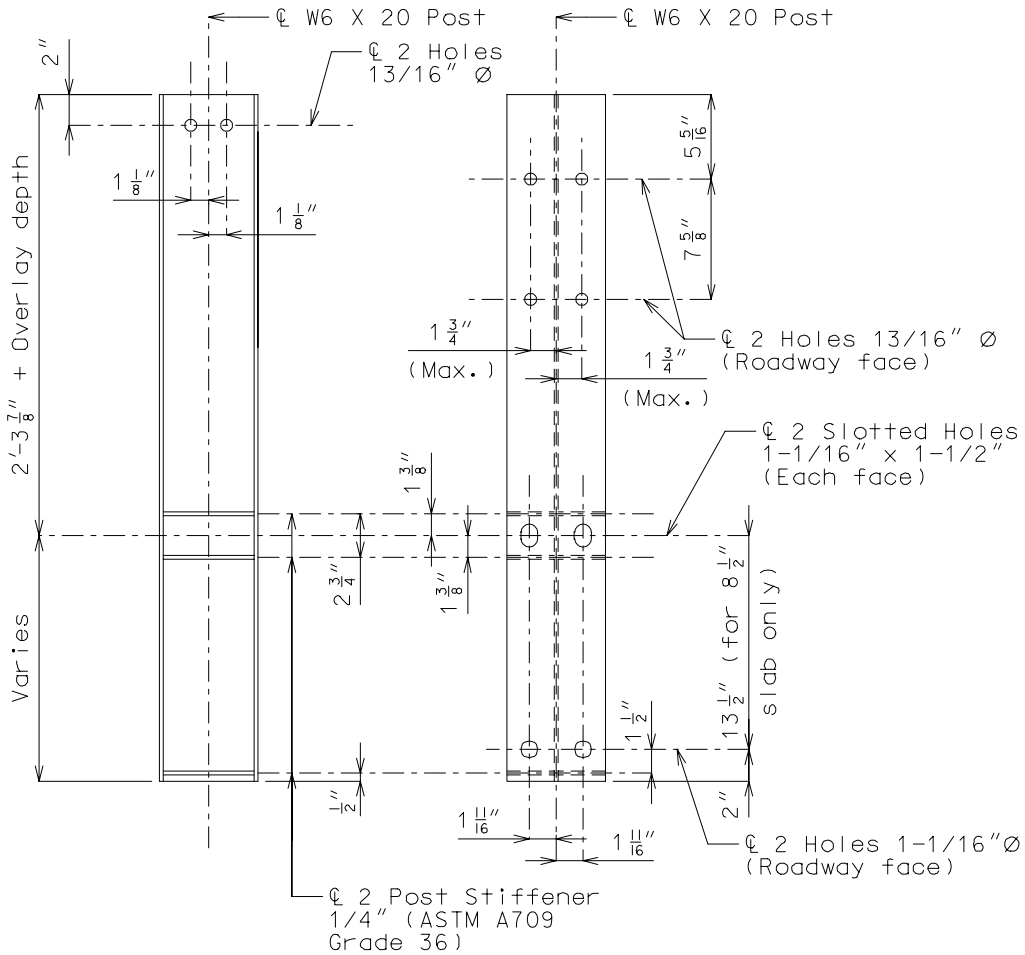

DETAILS OF POST

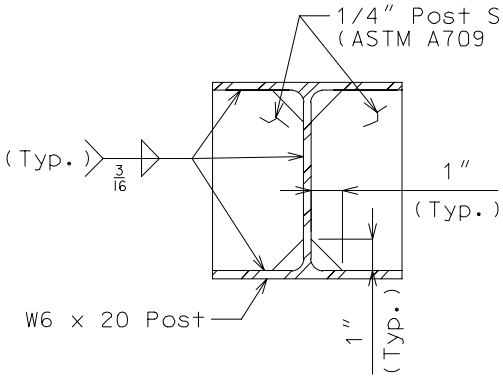

POST STIFFENER

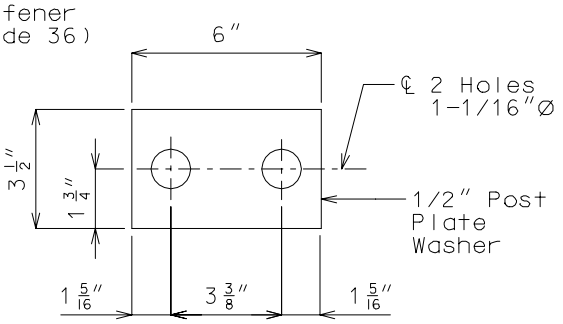

POST PLATE WASHER

SYSTEM 4: REPLACEMENT OF EXISTING CURB WITH THRIE BEAM RAIL TYPICAL CONNECTION

System 4: Applicable for rehabs on Deck Girder, Box Girder and similar structures.

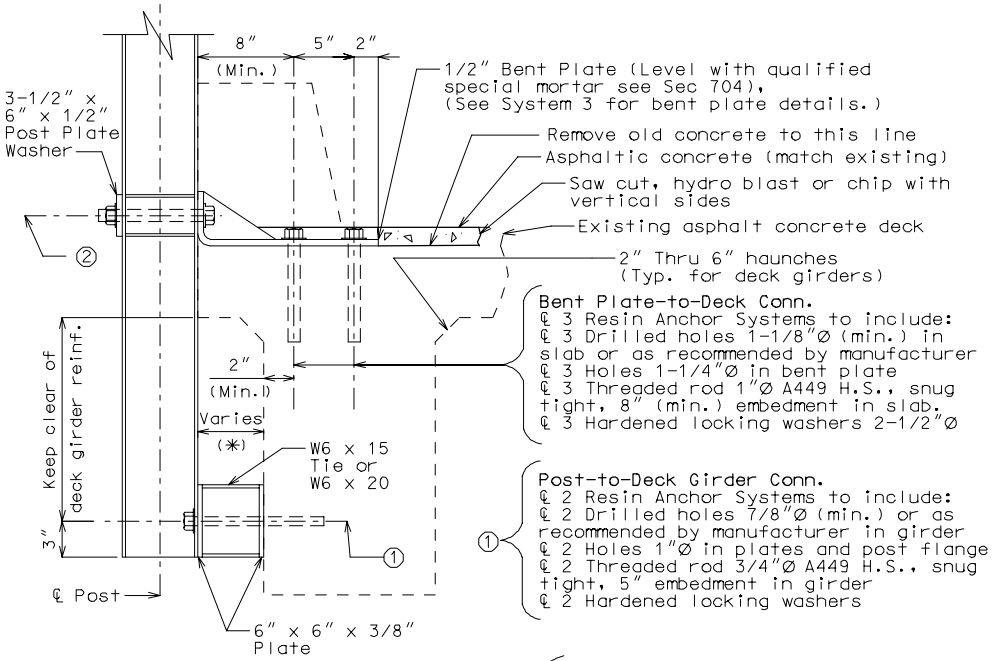

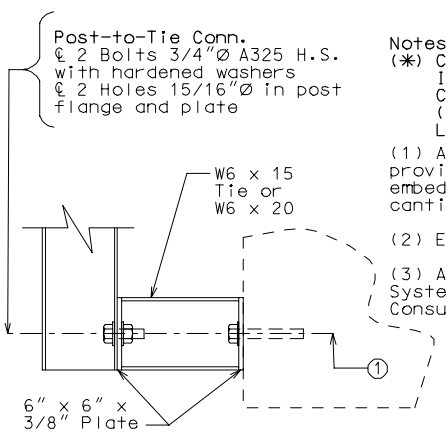

Notes:

(✳) CANTILEVER MAY VARY.
IF SLAB CANTILEVER LENGTH EXCEEDS 6", CONSIDERATION SHALL BE GIVEN TO:
(WITH THE RESULT THAT ANCHORAGE INTO SLAB LIES IN THE CANTILEVER PART OF SLAB)

(1) Anchorage into cantilever portion of slab provided original slab thickness allows for min. embedment and 1" cover (check negative moment in cantilever).

(2) Extending bent plate (within reason).

(3) Alternative method of of attachment, i.e. System 1 or System 3 types and variations thereof, Consult Structural Project Manager.

SYSTEM 4 AND OPTIONAL SYSTEM 4: REPLACEMENT OF EXISTING CURB WITH THRIE BEAM RAIL (CONT.) DETAILS OF BENT PLATE

When a latex, a low slump or a silica fume concrete overlay is used, add the following details:

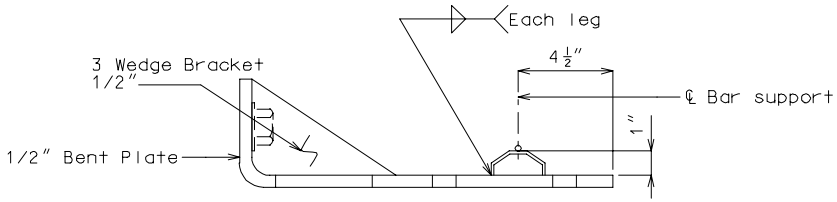

PART SECTION THRU PLATE

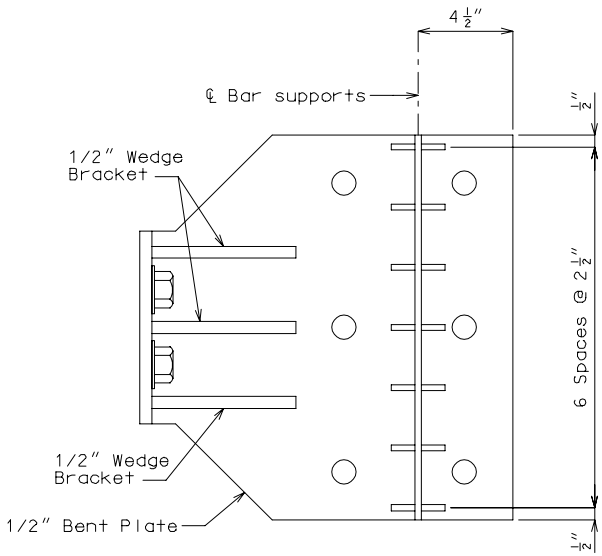

PLAN OF BENT PLATE

Note: Bar supports shall be galvanized Beam Bolsters in accordance with Sec 706.

SYSTEM 4 AND OPTIONAL SYSTEM 4: REPLACEMENT OF EXISTING CURB WITH THRIE BEAM RAIL DETAILS OF POST

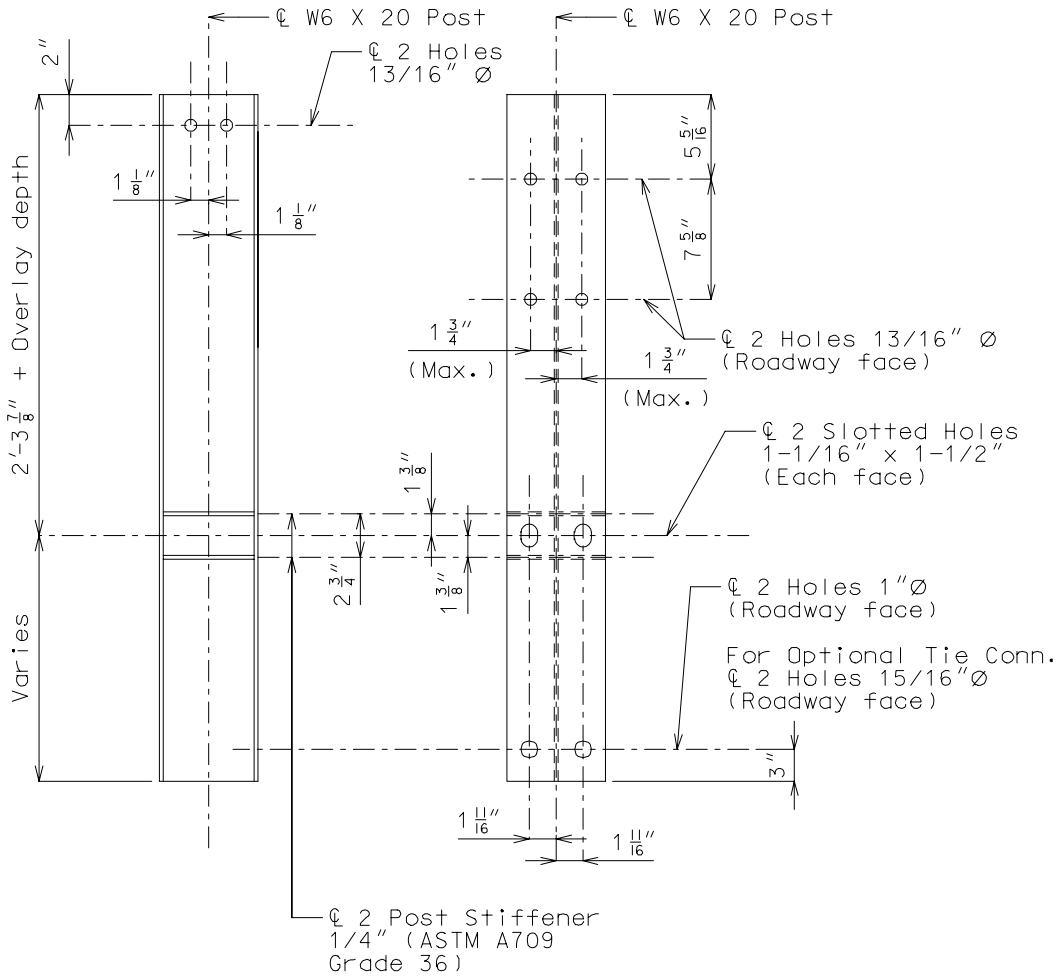

DETAILS OF POST

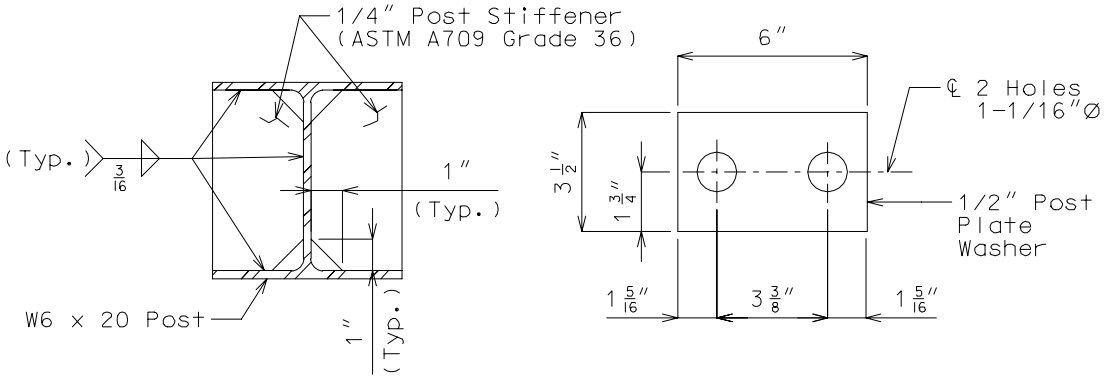

POST STIFFENER POST PLATE WASHER

SLAB DRAIN DETAILS (CONT.)
FOR STRUCTURES WITH OVERLAYS
(VARIABLE DEPTH GIRDERS)

Drainage

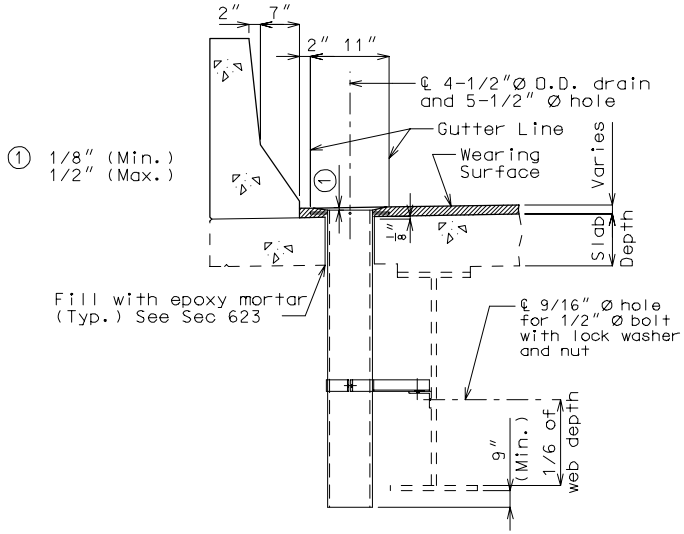

PART ELEVATION OF SLAB AT DRAIN

Note: For variable depth girders with drains in deeper section, let the deeper section control and use throughout the structure.

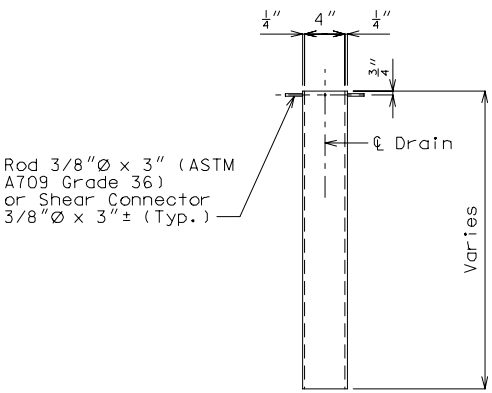

TYPICAL SECTION STRAIGHT DRAIN

SLAB DRAIN DETAILS
FOR STRUCTURES WITH OVERLAYS
(GIRDER DEPTH LESS THAN 48")

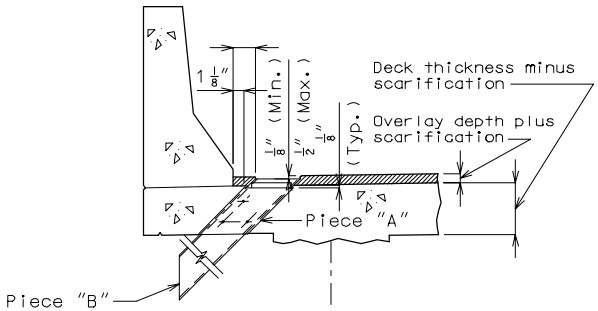

PART ELEVATION OF SLAB AT DRAIN

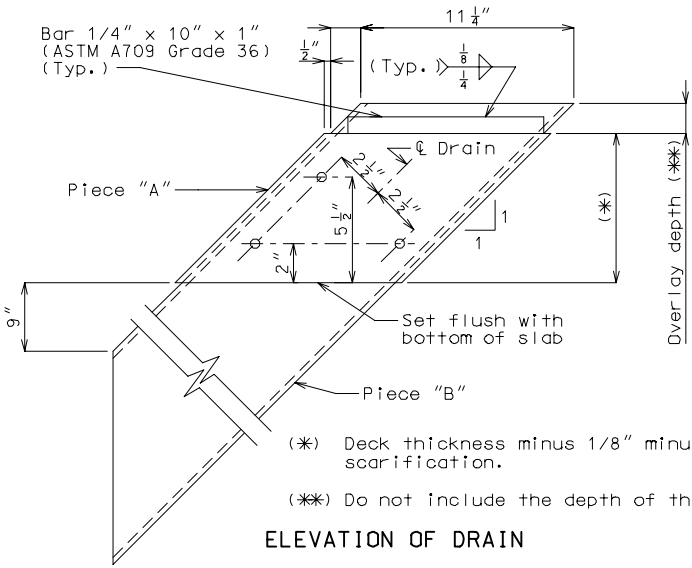

(*) Deck thickness minus 1/8" minus the depth of the scarification.

(**) Do not include the depth of the scarification.

ELEVATION OF DRAIN

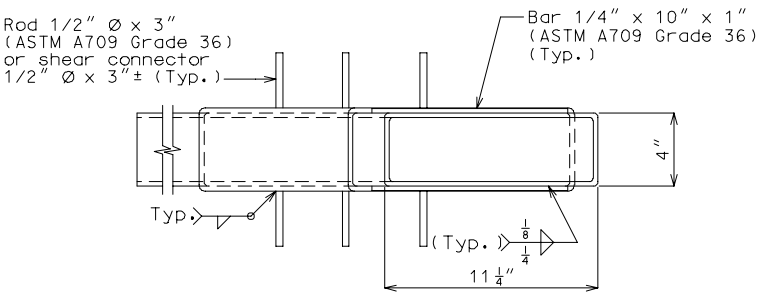

PLAN OF DRAIN

SLAB DRAIN DETAILS (CONT.)
FOR STRUCTURES WITH OVERLAYS
(GIRDER DEPTH 48" AND OVER)

Drainage

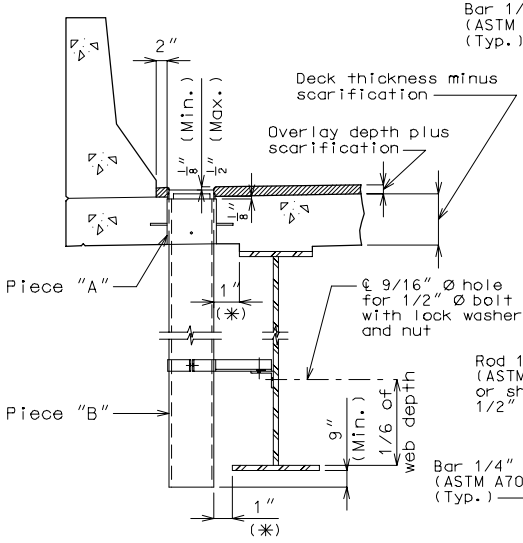

PART ELEVATION OF SLAB AT DRAIN

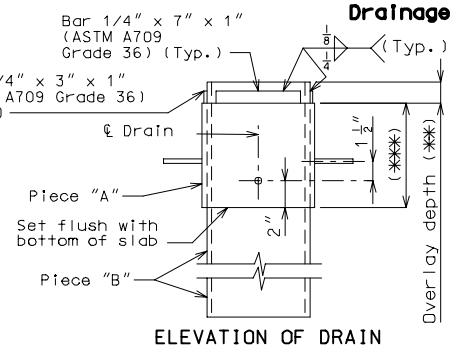

ELEVATION OF DRAIN

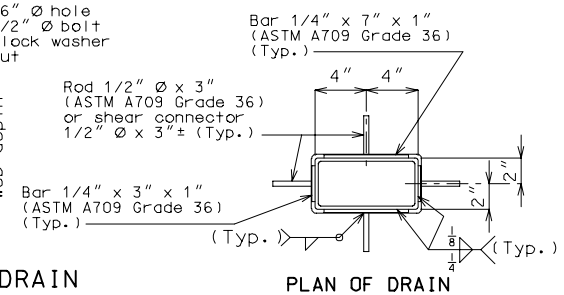

PLAN OF DRAIN

(✳) If dimension is less than 1", drains shall be placed parallel to roadway. Otherwise, place drains transverse to roadway.

(✳✳) Do not include the depth of the scarification.

(✳✳✳) Deck thickness minus 1/8" minus the depth of the scarification.

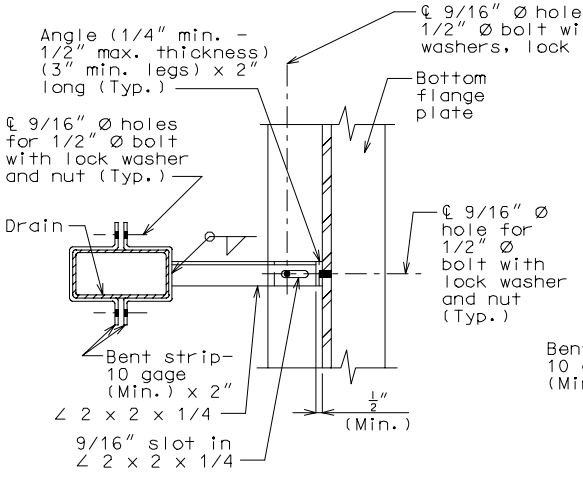

DRAIN TRANSVERSE TO ROADWAY

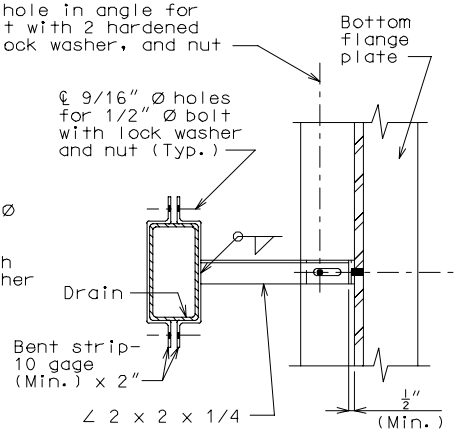

DRAIN PARALLEL TO ROADWAY

PART PLANS SHOWING BRACKET ASSEMBLY

SLAB DRAIN DETAILS (CONT.)
FOR STRUCTURES WITH OVERLAYS
(CONTINUOUS CONCRETE STRUCTURES)

Drainage

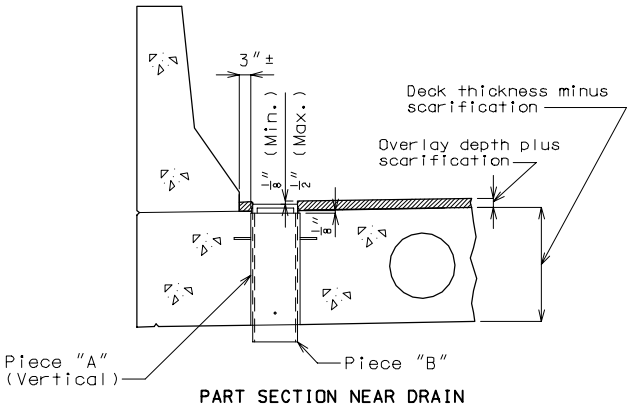

PART SECTION NEAR DRAIN

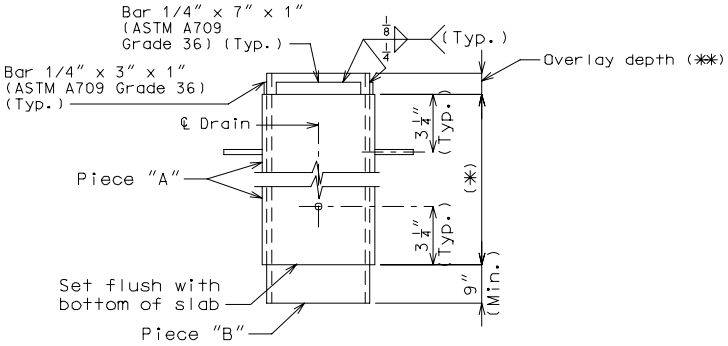

ELEVATION OF DRAIN

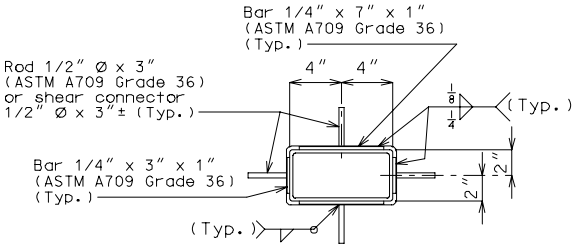

PLAN OF DRAIN

(✱) Deck thickness minus 1/8" the depth of the scarification.
(✱✱) Do not include the depth of scarification.

SLAB DRAIN DETAILS (CONT.)
FOR STRUCTURES WITH OVERLAYS
(VARIABLE DEPTH GIRDERS)

Drainage

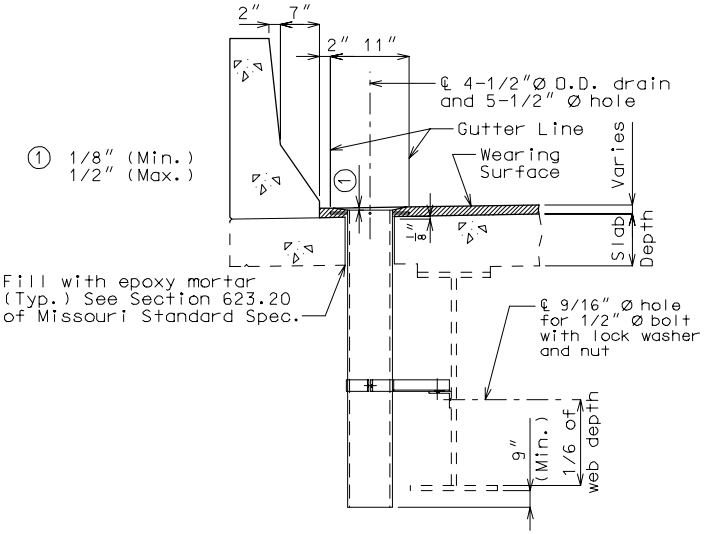

PART ELEVATION OF SLAB AT DRAIN

Note: For variable depth girders with drains in deeper section, let the deeper section control and use throughout the structure.

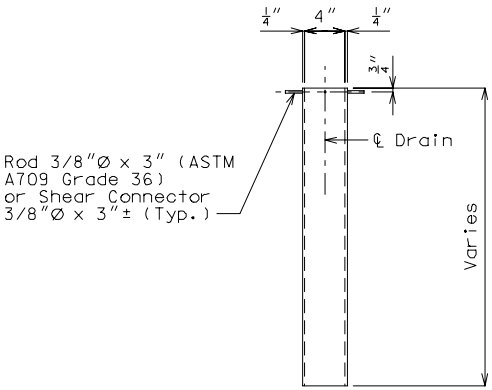

TYPICAL SECTION STRAIGHT DRAIN

SLAB DRAIN DETAILS (CONT.)
FOR STRUCTURES WITH OVERLAYS
MISCELLANEOUS DETAILS - ROUND DRAINS

Drainage

Note: See Manual Section 3.30 for slab drain spacing.

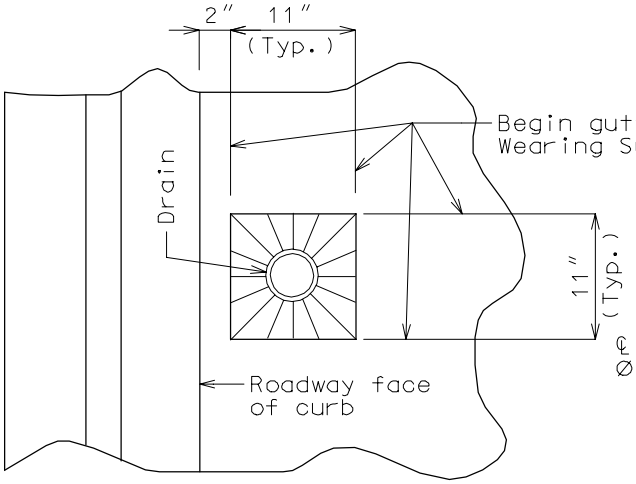

TYPICAL PART PLAN

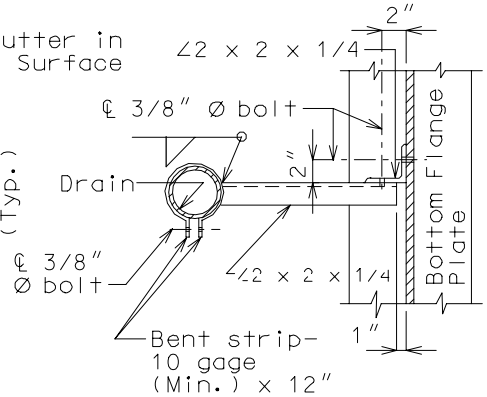

PART SECTION SHOWING
BRACKET ASSEMBLY

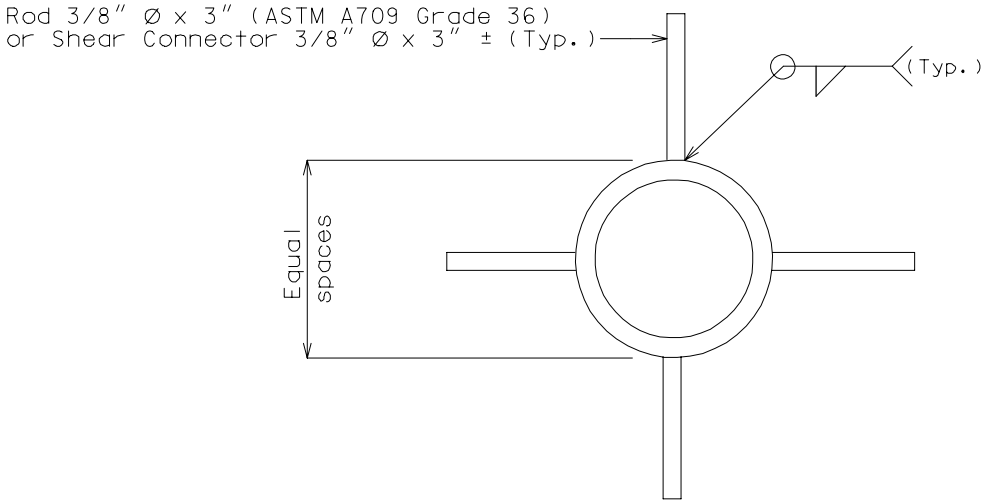

TYPICAL PART PLAN OF DRAIN

Note: See manual Section 4 for appropriate notes.

SLAB DRAIN DETAILS (CONT.)
FOR STRUCTURES WITH OVERLAYS
RAISING STANDARD SLAB DRAINS

Drainage

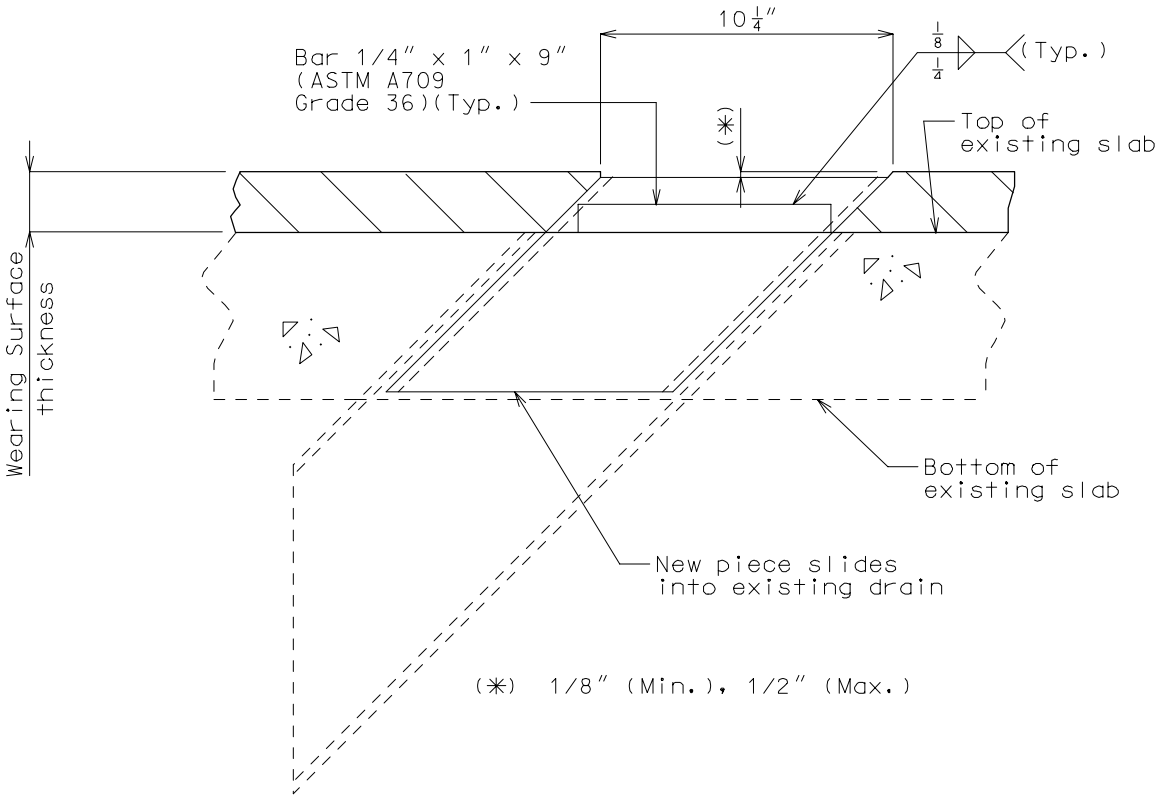

PART SECTION OF DRAIN

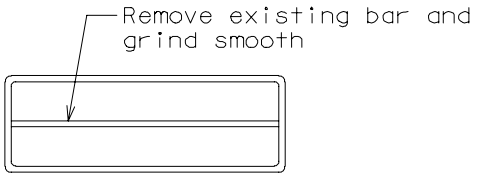

PART PLAN OF EXISTING DRAIN

Note:
Outside dimensions of drain extension are 7-1/4" x 3-1/4",
and drain extension shall be galvanized in accordance with ASTM A123.

SLAB DRAIN DETAILS (CONT.)
FOR STRUCTURES WITH OVERLAYS
DETAILS FOR RAISING SCUPPERS

Drainage

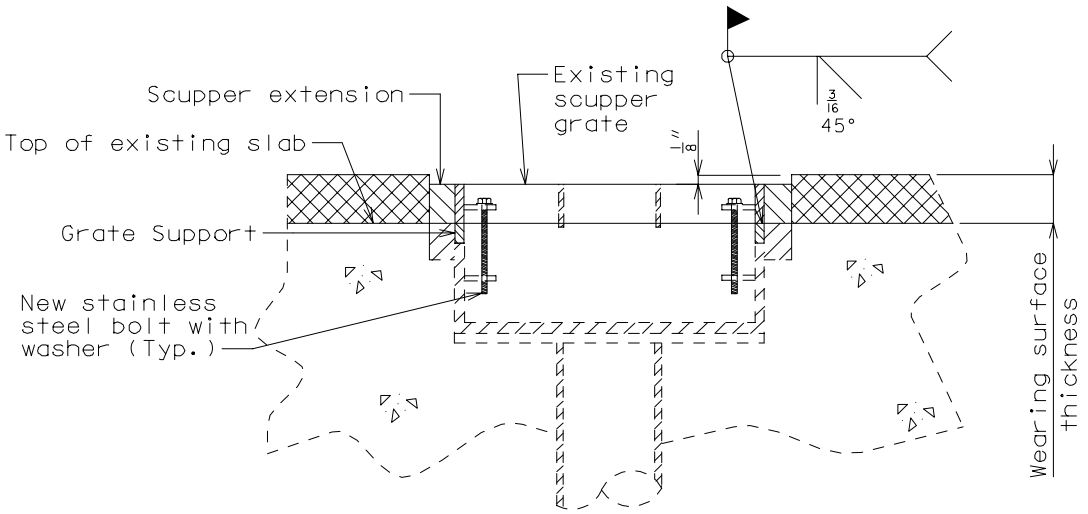

TYPICAL SECTION THRU SCUPPER

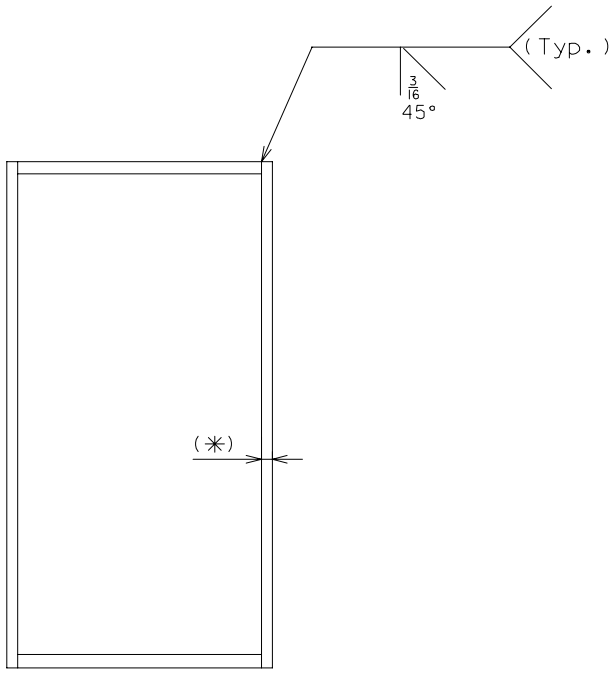

PLAN OF GRATE SUPPORT
AND
PLAN OF SCUPPER EXTENSION

(✳) Plate thicknesses should match those of existing scupper and existing grate.

CLOSURE POUR

Note:
For closure pour on solid slab or voided slab bridges, use expansive concrete (See Sec 703).

Release the forms before the closure pour is placed.

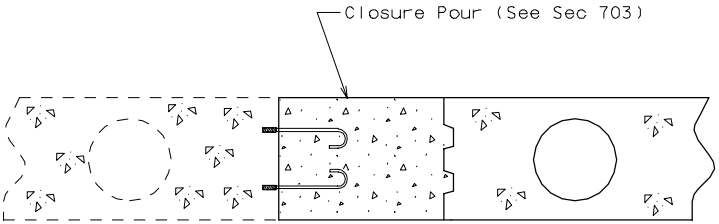

PART SECTION THRU ROADWAY

CONSIDERATIONS FOR ADEQUATE DESIGN

Posting Ratings

Existing structures that are being redecked and/or widened should be evaluated to determine whether or not the superstructure is structurally adequate. This structural adequacy should be determined based on the load ratings using the Load Factor Method. The superstructure on a structure will be considered to be structurally adequate if the following minimum posting values can be obtained during the load rating process:

1) H20 (one lane with Impact) [Posting Rating] ≥ 29 tons

2) 3S2 (one lane with impact) [Posting Rating] ≥ 50 tons

Posting Rating = 86% of Load Factor Operating Rating
Refer to next page for H20, 3S2 and MO5 criteria.

If a structure is located within a commercial zone and the bridge width is 35 feet or greater, then the following additional condition must be met:

3) MO5 (two lane with impact) [Operating Rating] ≥ 50 Tons

Any other overstresses or inadequacies (slab, substructure, etc.) shall be reported to the Structural Project Manager.

Deck thickness for redecks shall be determined such that Posting will not be required.

Deck thickness for widenings shall be existing thickness unless thicker slab does not create overall deck stiffening irregularities.

See Structural Project Manager if AASHTO minimum deck thickness can not be used on redecks and widenings.

Future Wearing Surface (FWS) Loadings for widenings with concrete overlays - In addition to weight of overlay:

Add FWS of 35 psf to the design of new girders if existing girders are sufficient for the 35 psf FWS

Lower FWS loading to 15 psf if existing girders are not sufficient for FWS loading of 35 psf

If existing girders are not sufficient for any FWS then lower FWS to FWS = 0.

The existing ratings should be reviewed to determine what wearing surface loads were used. When necessary, the rating should be evaluated for acceptability of the proposed changes in the wearing surface loads and geometry. Preliminary ratings that are based on estimated geometry shall be revised when the updated, final geometry is known.

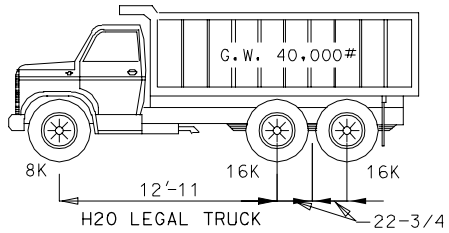

H20 LEGAL TRUCK

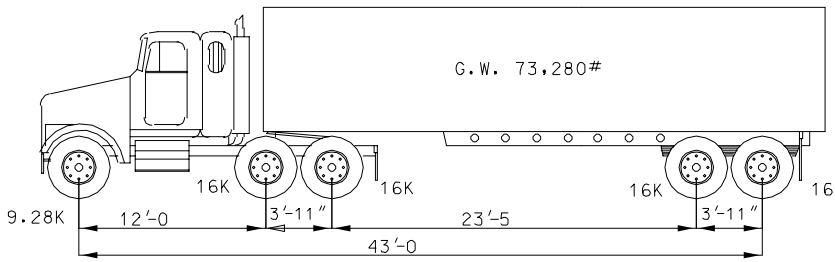

3S2 TRUCK

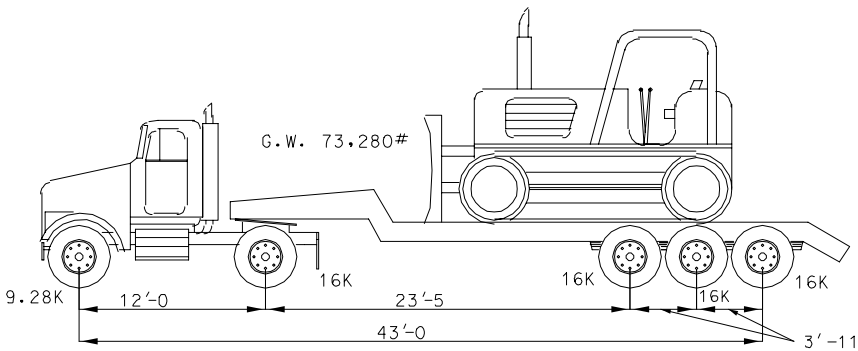

MO5 TRUCK