Missouri Department of Transportation

Bridge Division

Bridge Design Manual

Section 3.75

Revised 02/18/2004

Click Here for Index

Index

3.75.1 Design

1.1 General - Design Unit Stresses - Loads

1.2 Distribution of loads

1.3 Design Assumptions

3.75.2 Dimensions

2.1 Front Sheet

2.2 General Elevations (3 sheets)

2.3 Abutment Layout

2.4 Wing Elevations

2.5 Skewed Structures on Grade

2.6 Pile Location

3.75.3 Reinforcement

3.1 General Elevations (3 sheets)

3.2 General Plan (2 sheets)

3.3 Bearing Beam (2 sheets)

3.4 Safety Barrier Curbs

3.5 Pile Haunches

3.75.4 Details

4.1 Concrete Piles (Cast-In-Places)

4.2 Details of Access Door

4.3 Construction Joints

GENERAL

Design

Use Load Factor design method, except for pile capacity where the Service Load Design Method shall be used. In some cases, the Service Load Design Method may be permitted on widening projects. see the Structural Project Manager.

DESIGN UNIT STRESSES (also see Section 4 - Note A1.1)

(1) Reinforced Concrete

Class B Concrete (Substructure) $f_c = 1{,}200$ psi $f'_c = 3{,}000$ psi

Reinforcing Steel (Grade 60) $f_s = 24{,}000$ psi $f_y = 60{,}000$ psi

$n = 10$ $E_c = W^{1.5} \times 33 \sqrt{f'_c}$ (AASHTO Article 8.7.1) (✳)

Exceptions: Use following concrete for Abutment Slab

Class B2 Concrete $f_c = 1{,}600$ psi $f'_c = 4{,}000$ psi

Reinforcing Steel (Grade 60) $f_s = 24{,}000$ psi $f_y = 60{,}000$ psi

$n = 8$ $E_c = W^{1.5} \times 33 \sqrt{f'_c}$ (AASHTO Article 8.7.1) (✳)

Note:

Design the abutment slab with an integral wearing surface of 1/2".

(2) Reinforced Concrete (✳✳)

Class B-1 Concrete (Substructure) $f_c = 1{,}600$ psi $f'_c = 4{,}000$ psi

Reinforcing Steel (Grade 60) $f_s = 24{,}000$ psi $f_y = 60{,}000$ psi

$n = 8$ $E_c = W^{1.5} \times 33 \sqrt{f'_c}$ (AASHTO Article 8.7.1) (✳)

(3) Structural Steel

Structural Carbon Steel (ASTM A709 Grade 36)

$f_s = 20{,}000$ psi $f_y = 36{,}000$ psi

(4) Piling

For pile capacity, see Bridge Manual Sections 1.4 and 3.74. Also, see the Design Layout if pile capacity is indicated.

(5) Overstress

The allowable overstresses as specified in AASHTO Article 3.22 shall be used where applicable for Service Loads Design Method.

LOADS

(1) Dead Loads

As specified in Bridge Manual Section 1.2.

(2) Live Loads

As specified on the Design Layout.

Impact of 30% is to be used for design of the beams and Abutment Slab.

No impact is to be used for design of any other portion of Abutment including the piles.

(3) Temperature

See Bridge Manual Section 1.2.

(4) Wind Frictional Forces and Buoyancy

These forces shall be disregarded, except for special cases or if specified by the Structural Project Manager or on the Design Layout.

See Bridge Manual Section 1.2.

(5) Earthquake

All bridges in Seismic Performance Categories A, B, C & D are to be designed by earthquake criteria in accordance with this bridge manual. See Bridge Manual Section 6.1.

(✳) Use $W = 150$ pcf, $E_c = 60{,}625 \sqrt{f'_c}$

(✳✳) May be used for special cases, see Structural Project Manager.

DISTRIBUTION OF LOADS

Note: The following Dead Load and Live Load distributions are for one-span Abutment Slabs. For multi-span Abutment Slabs, consider the slab continuous over the intermediate supports.

(1) Dead Loads
Loads from stringers, girder, etc. shall be applied as concentrated loads at the intersection of the centerline of stringer or Girder and the centerline of bearing. Loads from superstructure units, such as concrete slab spans, shall be applied as uniformly distributed loads along the centerline of bearing.

Loads from Abutment Slab, Safety Barrier Curb and Abutment Wings shall be assumed to act simply-supported and the reactions to either the main bearing beam or the transverse approach pile cap beam will be considered as direct loads only for the computation of pile loads. (Evenly distributed laterally.)

(2) Live Load
Loads from stringers, girders, etc. shall be applied as concentrated loads at the intersection of the centerline of stringer or girder and the centerline of bearing. For the concrete slab spans, distribute two wheel lines over 10'-0" (normal to centerline of the roadway) of the substructure beam. This distribution shall be positioned on the beam on the same basis as used for wheel lines in Traffic Lanes for Substructure Design (See Section 1.2).

Loads from the Abutment Span shall be assumed to act simply-supported with the type of load that would control the design of that particular memeber, e.g., lane loading added to loads from adjacent spans for the design of the main bearing beam and truck loading for the design of the transverse pile cap beam. These loads are assumed to be direct loads only and are for the computation of pile loads.

(3) Wing, Frictional Forces and Buoyancy
These forces shall be disregarded, except for special cases or if specified by the Structural Project Manager, or on the Design Layout. See Bridge Manual Section 1.2.

(4) Earthquake Loads
All bridges in Seismic Performance Categories A, B, C & D are to be designed by earthquake criteria in accordance with this bridge manual. See Bridge Manual Section 6.1.

DESIGN ASSUMPTIONS

(1) BEARING BEAM AND TRANSVERSE APPROACH BEAM:
The beams shall be assumed continuous over supports at centerline of piles.

One half of the dead load of the approach slab shall be included in the approach beam design.

(2) HORIZONTAL FORCES:

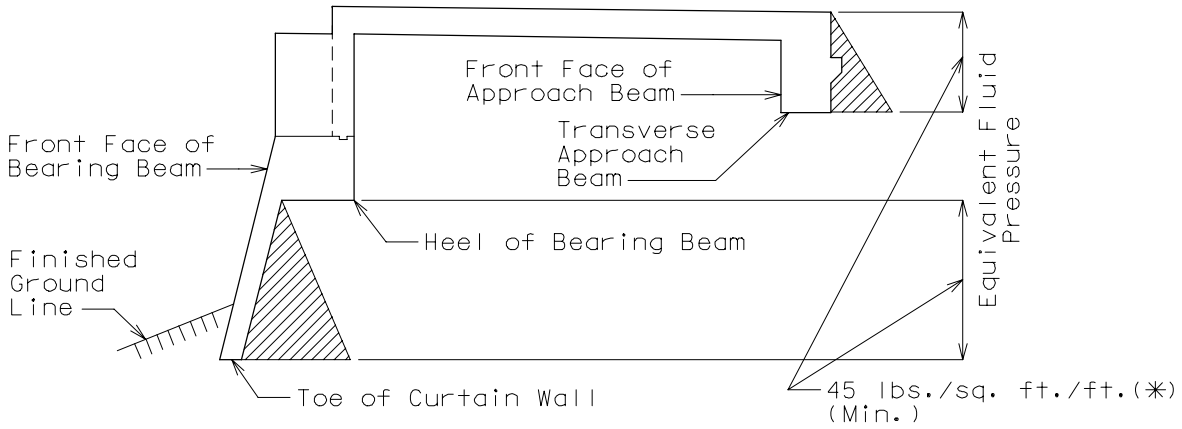

✳ Or compute using the Φ angle, when it is given.

Note: Do not use earth pressure on the front faces.

(3) PILES:
For Groups **I** through **VI** loadings: piles shall be designed for the dead load and live load transferred from superstructure and dead load from different abutment components. Piles under approach beam shall also be designed for the one half of the approach slab dead load.

Stresses in the piles due to bending need not be considered in design calculations, except for seismic design.

For anchorage of steel piles and concrete piles in Seismic Performance Categories B, C & D, See Section 3.74, page 1.2-4 and Section 3.72, page 3.5-1.

FRONT SHEET

Details and Dimensions:

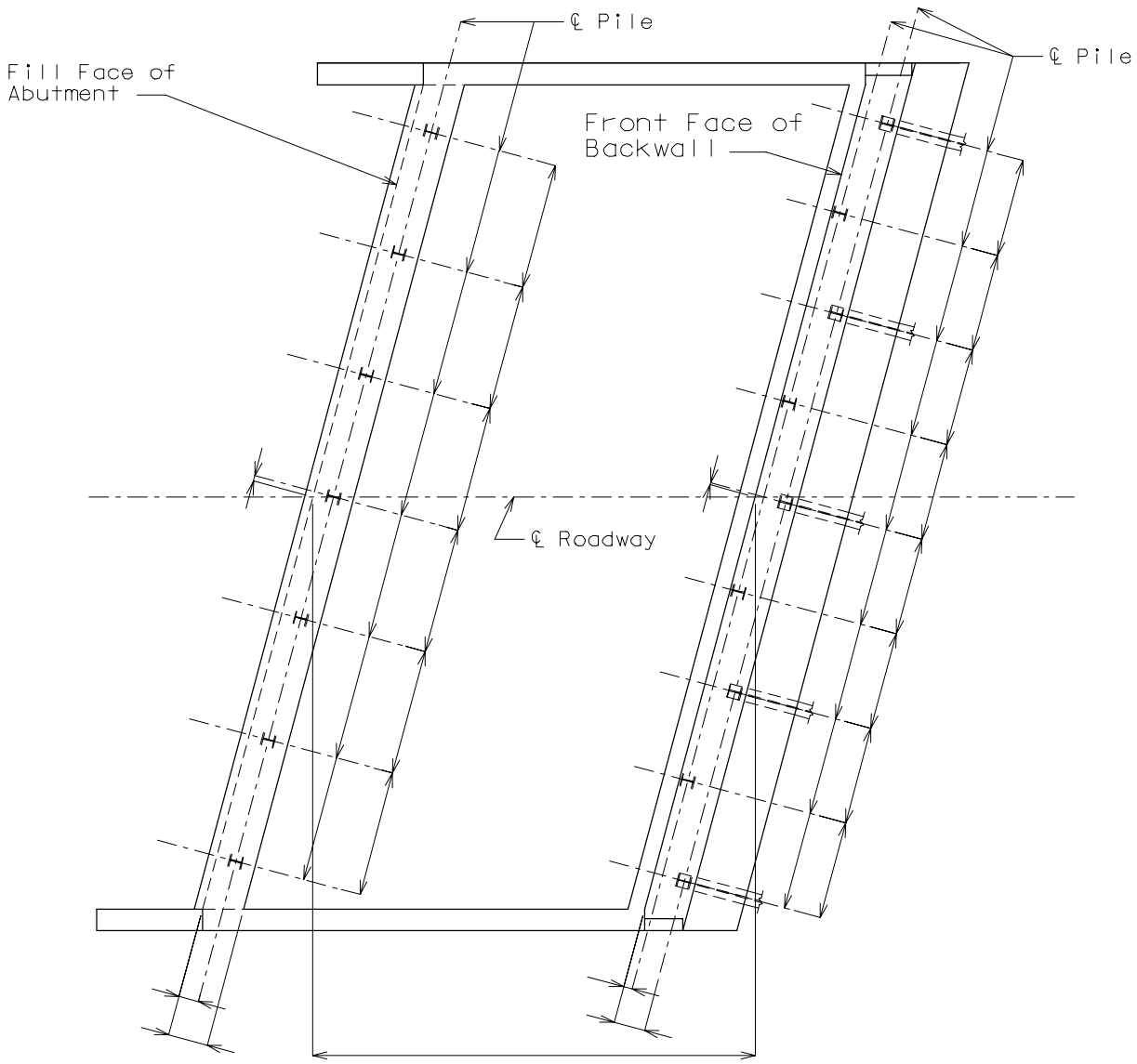

PLAN VIEW

Note: Details for unsymmetrical roadways will require dimensions tying Centerline of Roadway to Centerline of Structure. (Pile coordinates shall be to Centerline of Roadway.)

Dimensions

GENERAL ELEVATIONS

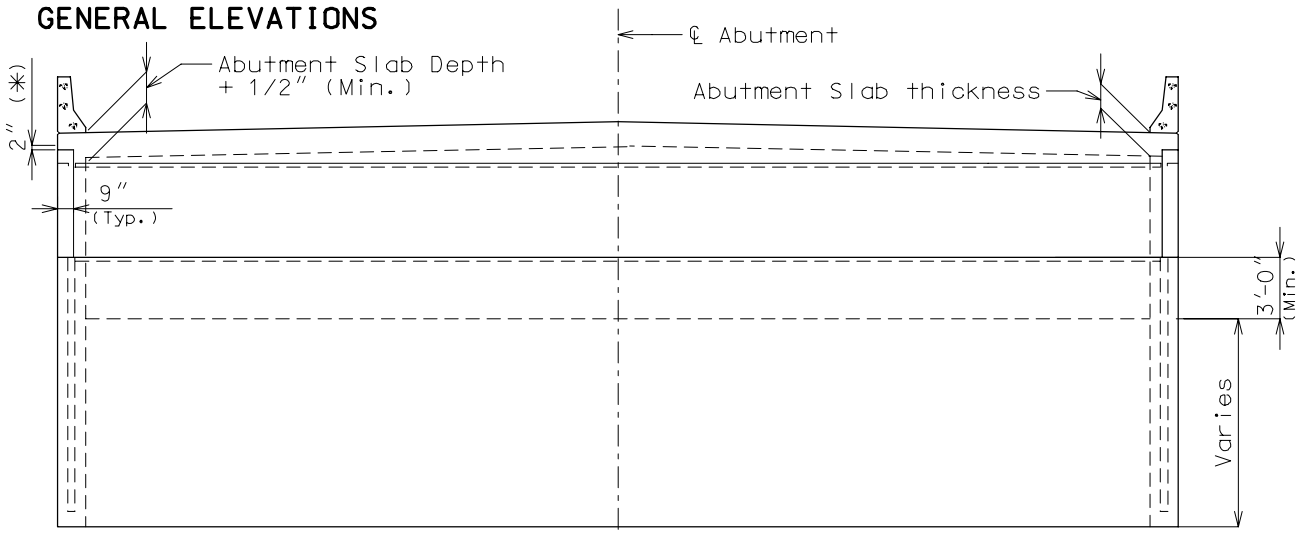

FRONT ELEVATION
(SQUARE)

✳ Top of guard wall to be 2″ below the slab of the adjoining span.

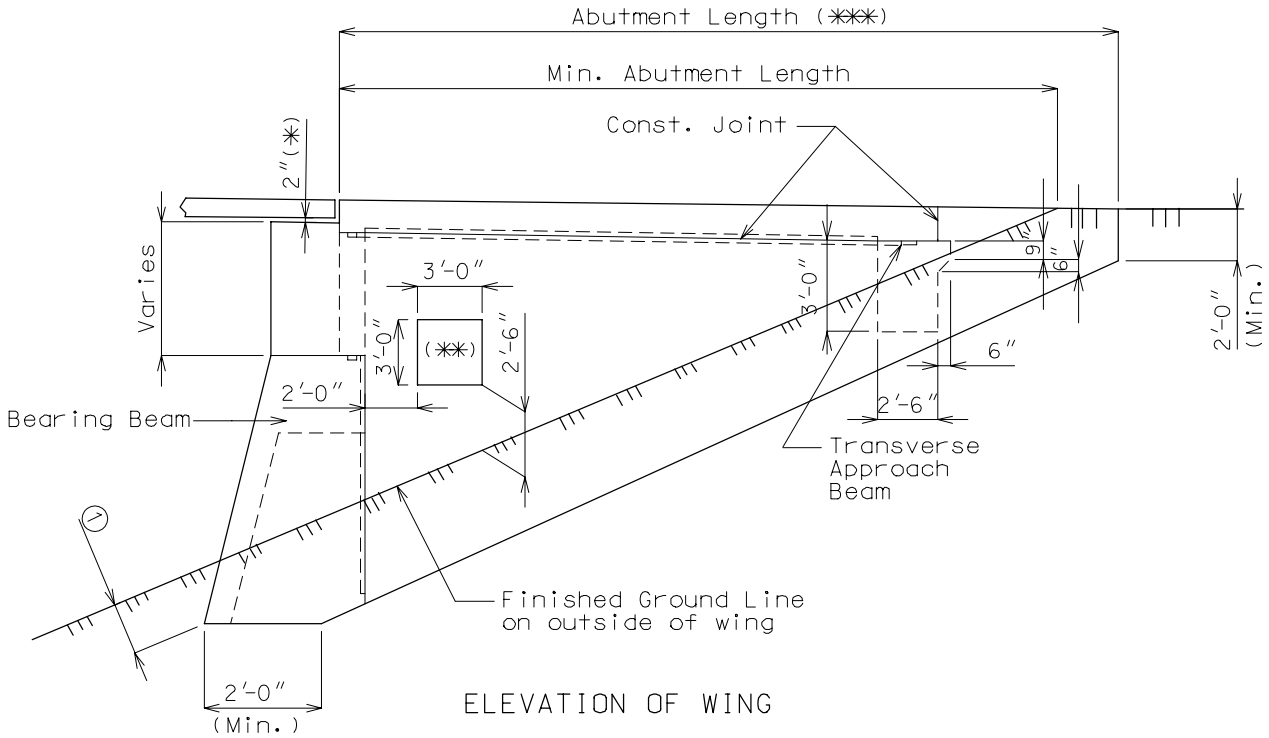

ELEVATION OF WING

✳✳ An access door shall be used only when called for on the Design Layout for extra large Abutments.

✳✳✳ It may be necessary to increase Abutment Length so end of wing extends beyond the intersection of the ground line and top of slab at the outside edge of wing.

① 2′-0″ (Min.) from ground line to front toe.

GENERAL ELEVATIONS (CONT.)

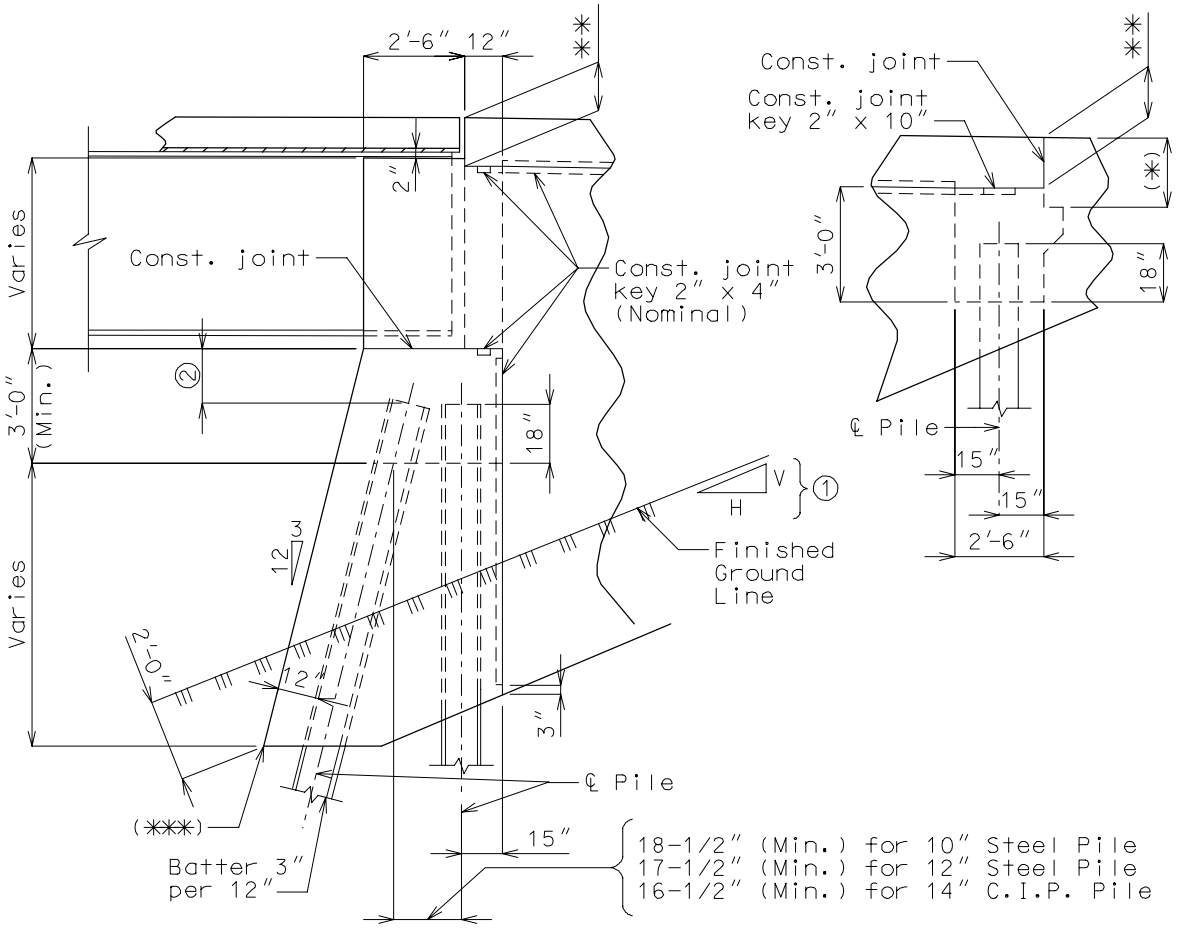

① Check the profile sheet with Design Layout for the slope of finish ground line.

② Check the clearance of anchor bolt wells; increase beam depth if needed.

* 12" (Min.) at the gutter line; except when slab depth is 12" or greater, place the approach haunch 1/2" below the bottom of the slab.

** Abutment Slab Depth + 1/2" (Min.)

*** See Micro Computer Program to locate the distance to the intersection of slopes.

GENERAL ELEVATIONS (CONT.)

GROUND LINE WITHIN ABUTMENTS

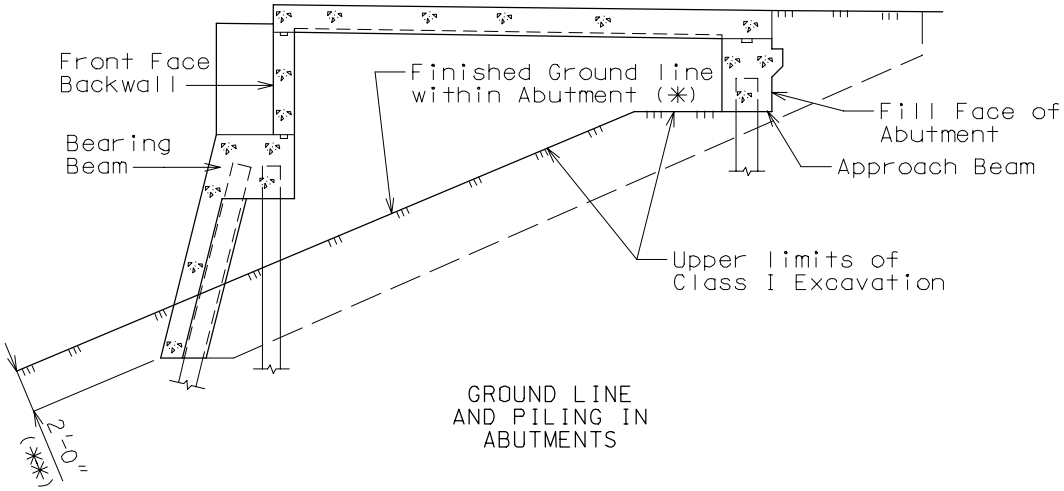

GROUND LINE
AND PILING IN
ABUTMENTS

The sketch shown shall be detailed on the first or second sheet of the plans for bridges having Semi-Deep Abutments.

✳ Add the appropriate notes from Bridge Manual Section 4 G.

✳✳ 2'-0" (Min.) from ground line to front of toe.

ABUTMENT LAYOUT

Dimensions

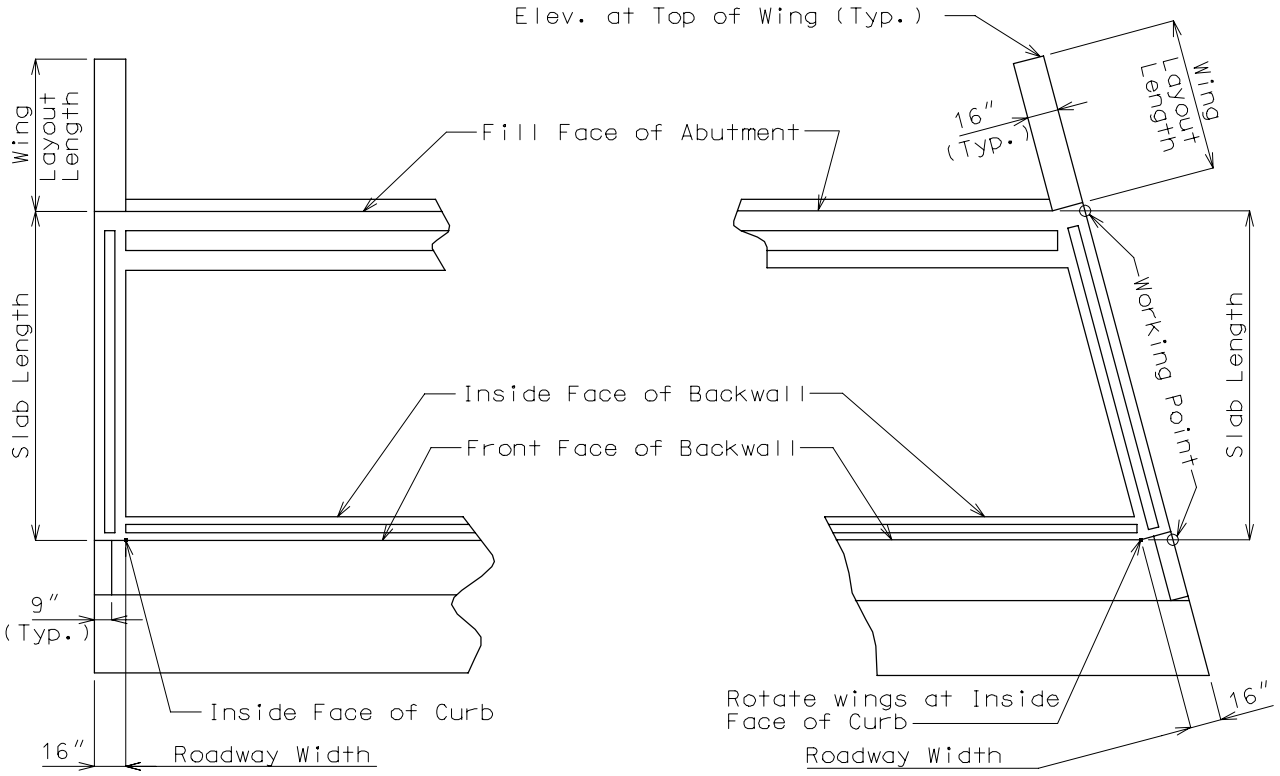

SQUARE STRUCTURES

SKEWED STRUCTURES

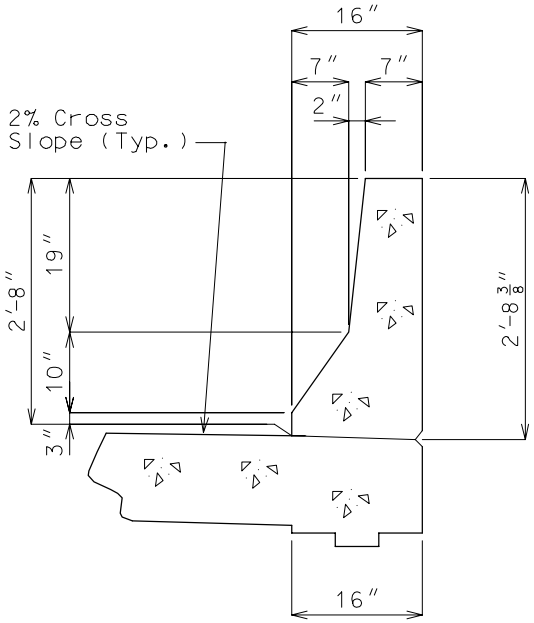

SECTION THRU
SAFETY BARRIER CURB
ON ABUTMENT SLAB

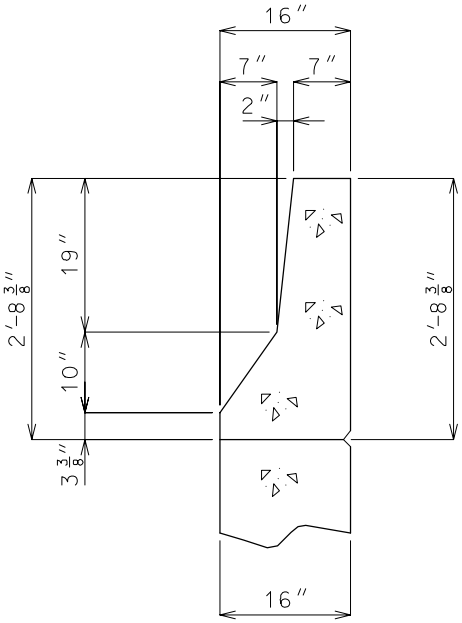

SECTION THRU
SAFETY BARRIER CURB
ON WING

WING ELEVATIONS

Dimensions

Elevation "A" and "B":

Wing elevation are determined at these points for bridges on grade.

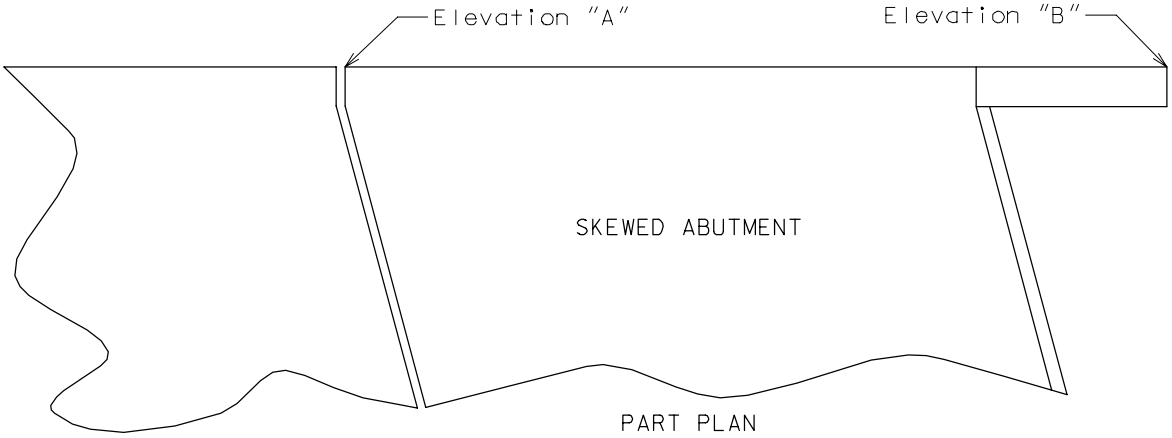

PART PLAN

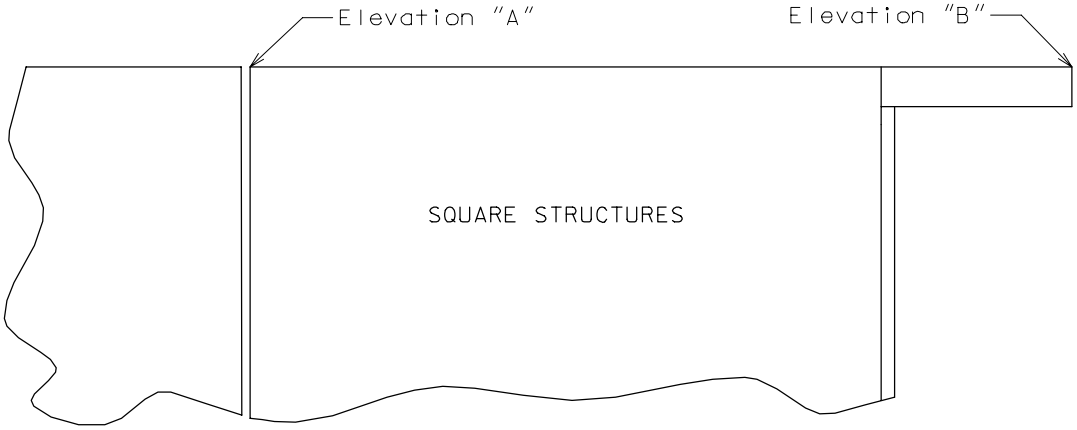

PART PLAN

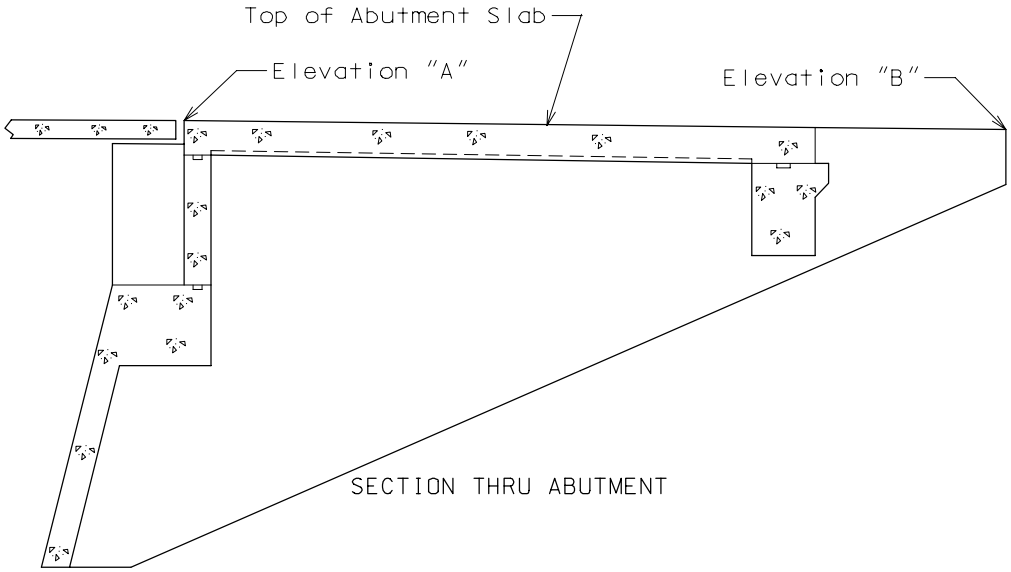

SKEWED STRUCTURES ON GRADE

① Slope backwall when the slab haunch exceeds 6″ (at gutter line).

② Top of wings (form end of wings to fill face of Abutment Slab) shall be built parallel to grade.

③ Abutment Slab Depth + 1/2″ (Min.) to const. joint.

④ 12″ (Min.) at Gutter Line to the top of the Approach Haunch, except when the Abutment Slab Depth is 12″ or greater, then place the Approach Haunch 1/2 ″ below the bottom of the slab.

⑤ Slope Approach Beam on both top and bottom when the Abutment Slab haunch exceeds 6″ (at Gutter Line).

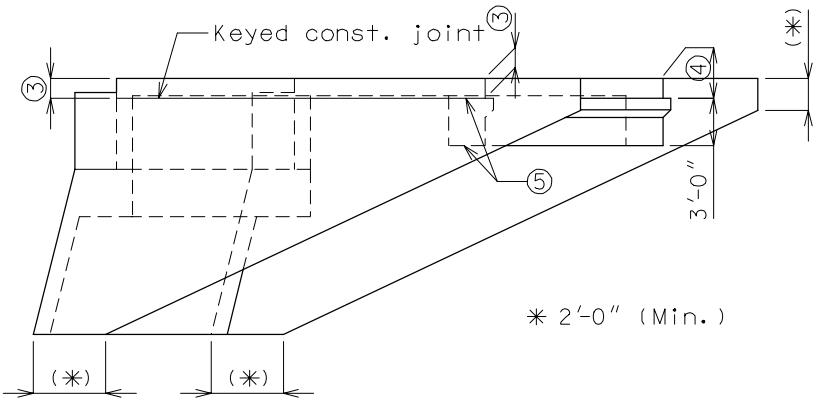

ELEVATION A-A
(Taken parallel to wing)

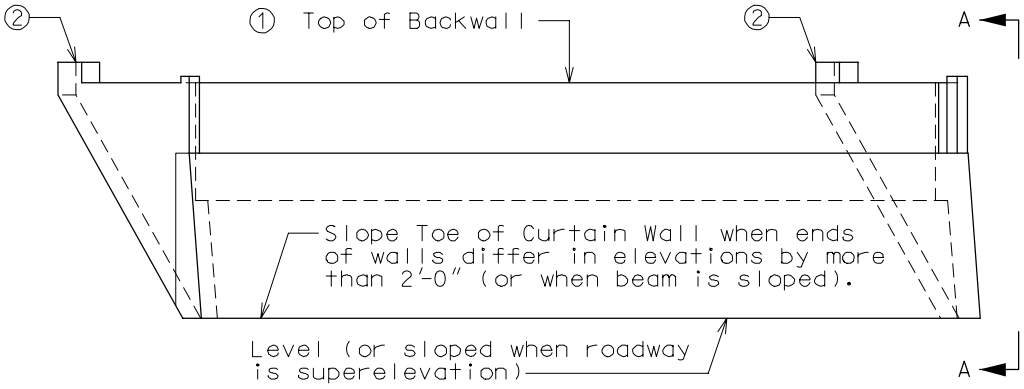

FRONT ELEVATION

Dimensions

PILE LOCATION

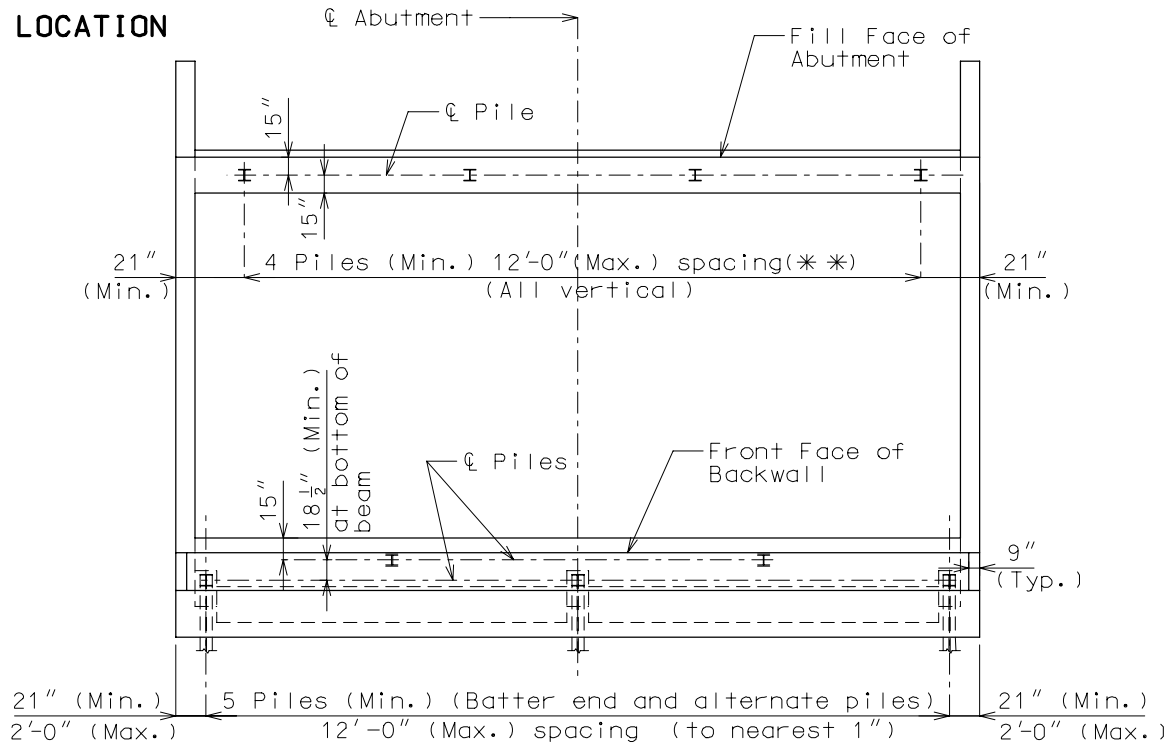

PLAN OF ABUTMENT (SQUARE)

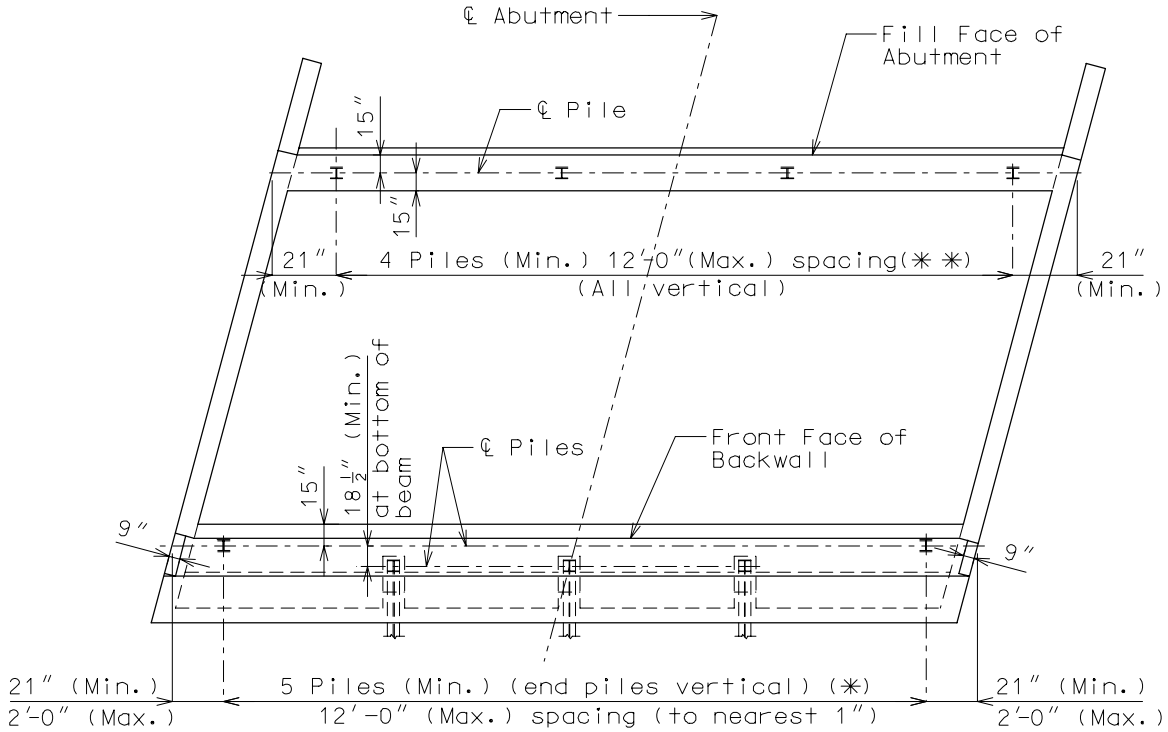

PLAN OF ABUTMENT (SKEWED)

✳ If more than 5 piles are required, alternate vertical and battered piles under Bearing Beam.

✳✳ 1″ Increments

Reinforcement

GENERAL ELEVATIONS

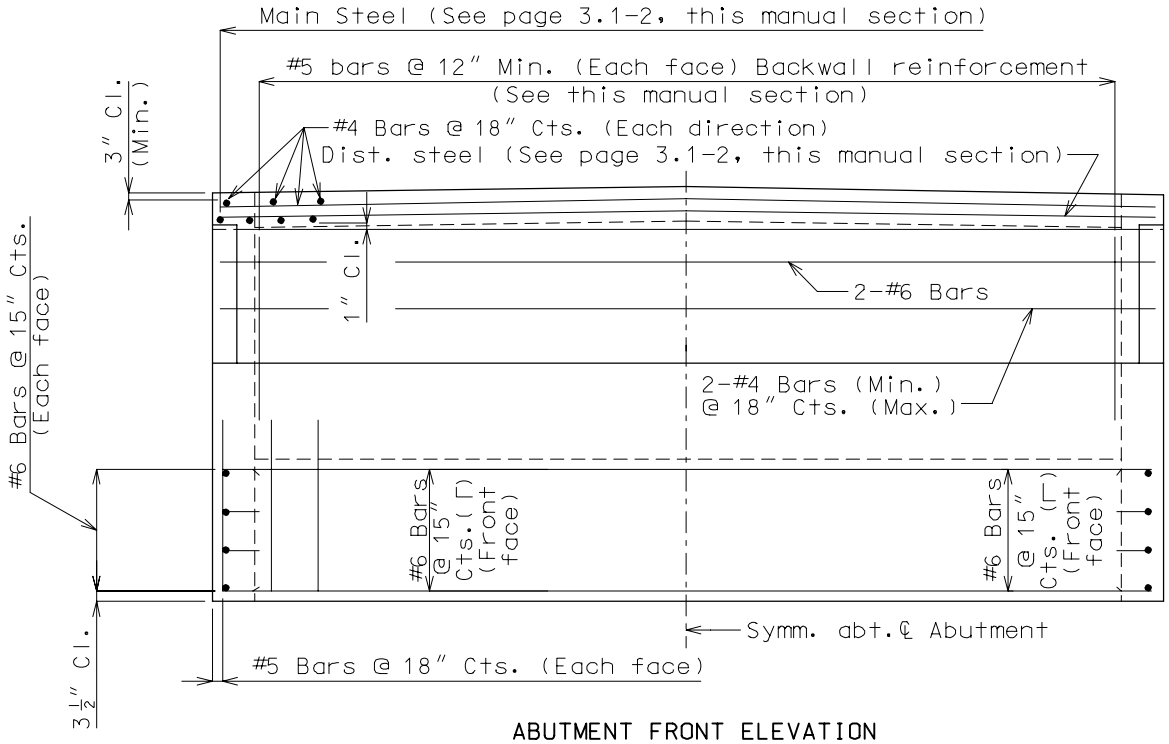

ABUTMENT FRONT ELEVATION

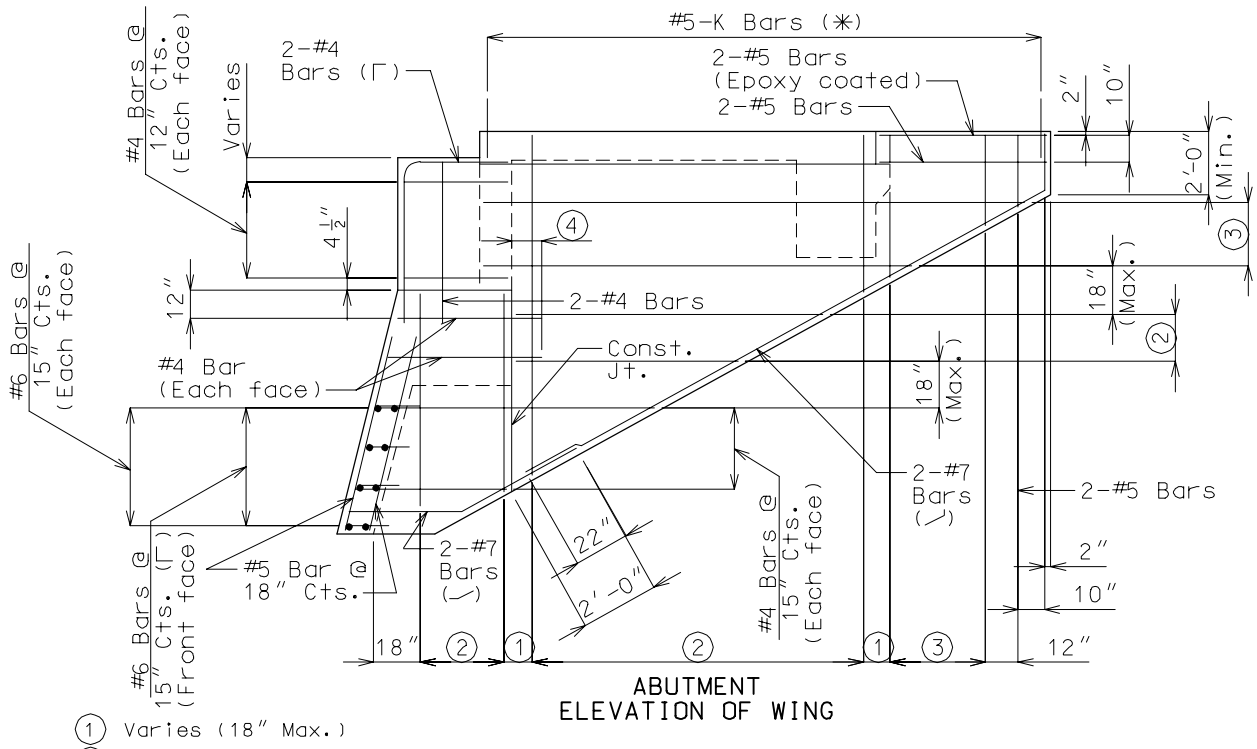

ABUTMENT
ELEVATION OF WING

1. Varies (18″ Max.)
2. #4 Bars at 18″ Cts. (Each face)
3. #5 Bars at 12″ Cts. (Each face)
4. 12″ (Min.) (Development length)

✳ See Bridge Manual Section 3.30 for barrier curb details and spacing of K bars.

GENERAL ELEVATIONS (CONT.)

Reinforcement

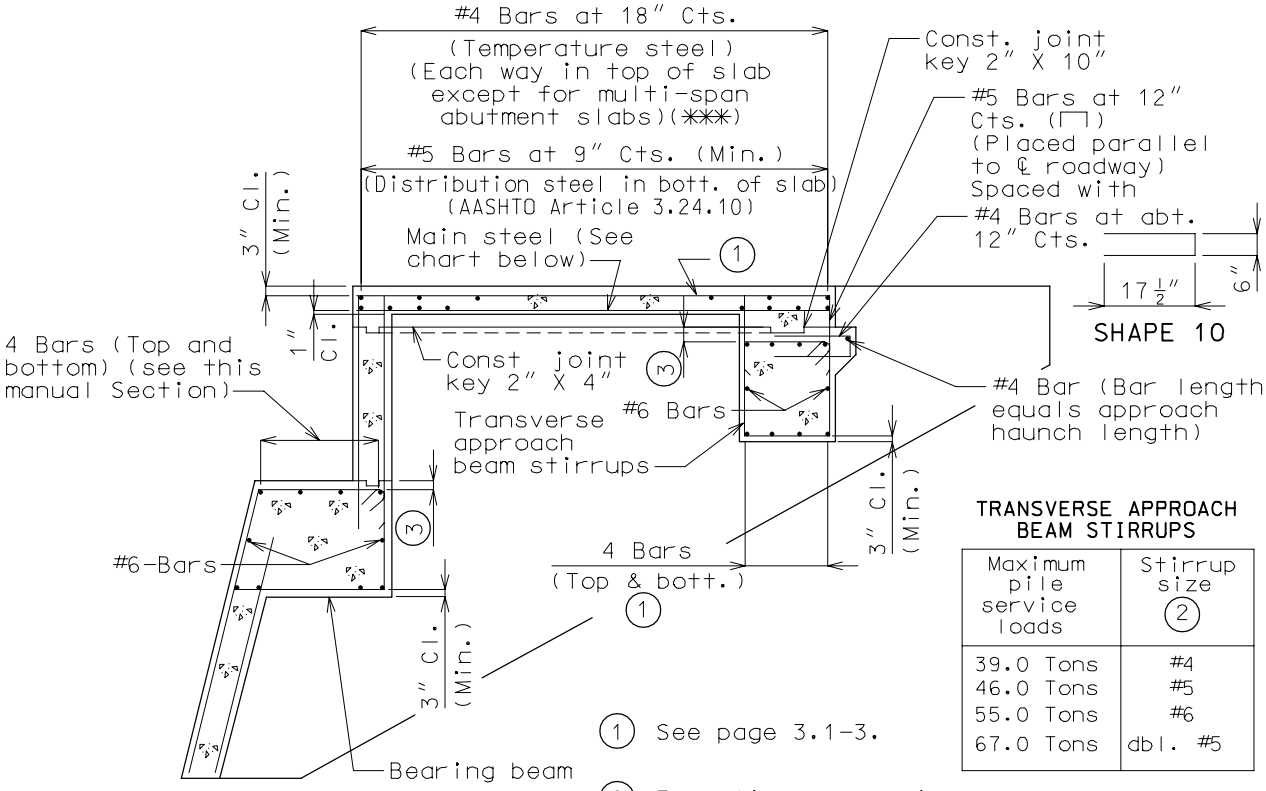

TRANSVERSE APPROACH BEAM STIRRUPS

Maximum pile service loads	Stirrup size (2)
39.0 Tons	#4
46.0 Tons	#5
55.0 Tons	#6
67.0 Tons	dbl. #5

(1) See page 3.1-3.

(2) For stirrups spacing, see page 3.2-1.

(3) 2-1/2" Cl. (To clear the const. joint key)

LONGITUDINAL SECTION THRU ABUTMENT

ABUTMENT SLAB BOTTOM REINFORCEMENT CHART(✱✱✱)				
Abutment Slab design Lengths (✱)	Uniform slab thickness (✱✱)	Main steel parallel to ℄ Rdwy.		Distribution steel (Percent of main steel)
		HS20-44 Loading (✱✱✱)	HS20 MODIFIED Loading (✱✱✱)	
10'-0"	11"	#7 at 7.5" Cts.	#8 at 9" Cts.	31.62%
15'-0"	12"	#8 at 8.5" Cts.	#8 at 7" Cts.	25.82%
20'-0"	15"	#8 at 8" Cts.	#8 at 6.5" Cts.	22.36%
25'-0"	17"	#8 at 7" Cts.	#8 at 6" Cts.	20.00%
30'-0"	20"	#8 at 6" Cts.	#8 at 5" Cts.	18.26%
35'-0"	22"	#9 at 6.5" Cts.	#9 at 5.5" Cts.	16.90%

✱ Abutment slab design length is measured from the center of the backwall to the center of the approach beam along the centerline of roadway.

✱✱ 1" Increments. For minimum slab depths, see AASHTO Article 8.9.2

✱✱✱ For abutment slabs with lengths greater than 35'-0", an intermediate bent is required inside the Semi-Deep Abutment. Top & bottom reinforcement for these slabs shall be designed by the designer.

For additional notes for Semi-Deep Abutment reinforcement, see page 3.1-3.

GENERAL ELEVATIONS (CONT.)

Reinforcement

Note ①

Use 4 bars for transverse approach beam's longitudinal reinforcement, see table below.

Abut. slab lengths	Abut. slab thickness	APPROACH BEAM REINFORCEMENT (TOP & BOTT.)(✳)	
		HS20-44 Loading	HS20 MODIFIED Loading
10'-0"	11"	4-#6	4-#6
15'-0"	12"	4-#6	4-#6
20'-0"	15"	4-#6	4-#7
25'-0"	17"	4-#7	4-#7
30'-0"	20"	4-#7	4-#8
35'-0"	22"	4-#7	4-#8

(✳) Including one half of the dead load of the 25' long approach slab.

In abutment slab, for top reinforcement use #4 bars at 18" cts. in each direction, except design top reinforcement in multi-span abutment slabs.(Reinforcement shown on page 3.1-2 is for bottom of slab.) All transverse steel is to be placed parallel to the backwall. All main steel to be placed parallel to the centerline of Roadway.

Epoxy coat all reinforcing in abutment slab and bearing beam. See Section 3.35 for details of protective coating and sloping top of beam to drain.

ACCESS DOOR: See also page 4.2-1.

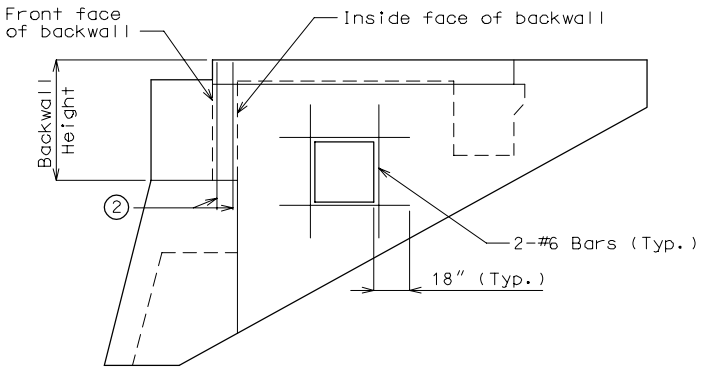

PART ELEVATION OF WING

Note: Cut or bend reinforcing steel in the field to clear the opening for the access door.

BACKWALL REINFORCEMENT:

② Use the following epoxy coated backwall reinforcement.
Backwall height less than 6'-0":
Front face = #5 bars at 12" cts.
Inside face = #5 bars at 12" cts.

Backwall height 6'-0" thru 10'-0":
Front face = #5 bars at 12" cts.
Inside face = #6 bars at 12" cts.

GENERAL PLAN (SQUARE) Reinforcement

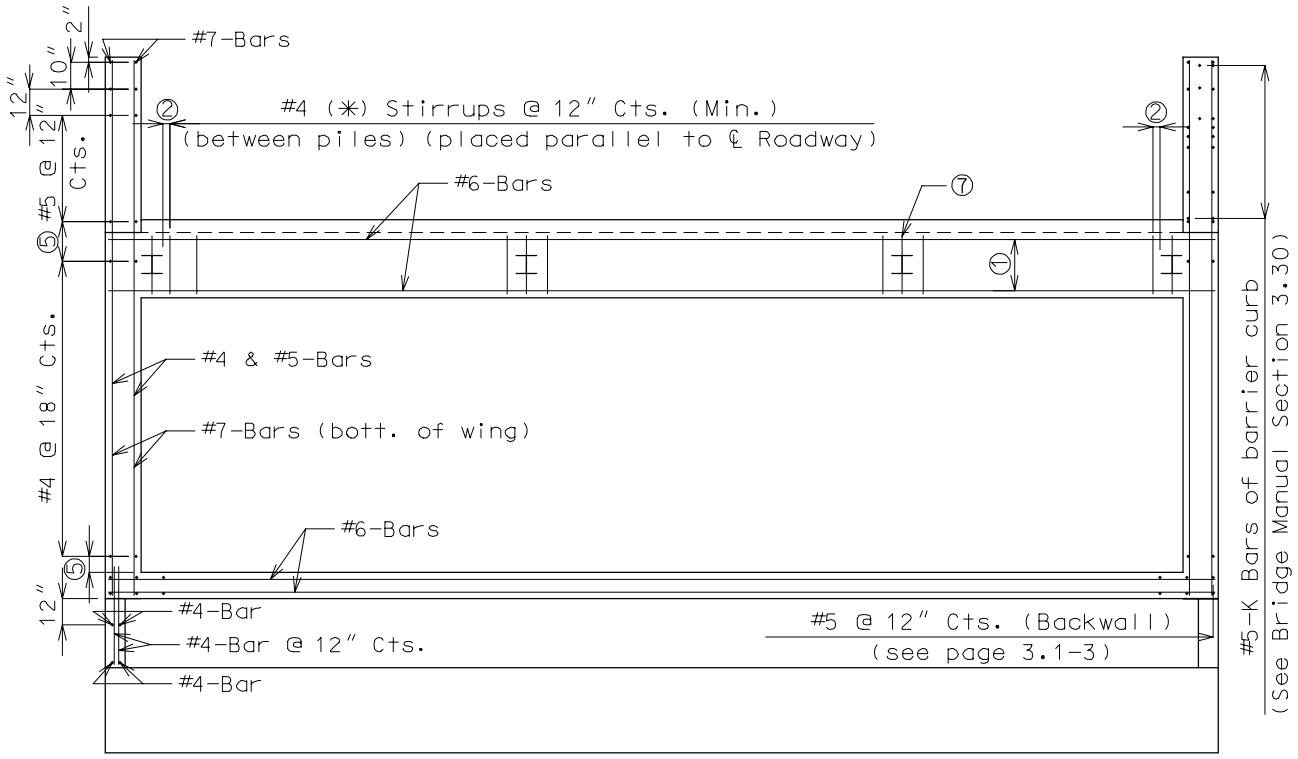

SECTION AT UPPER CONSTRUCTION JOINT

✳ See LONGITUDINAL SECTION THRU ABUTMENT on page 3.1-2.

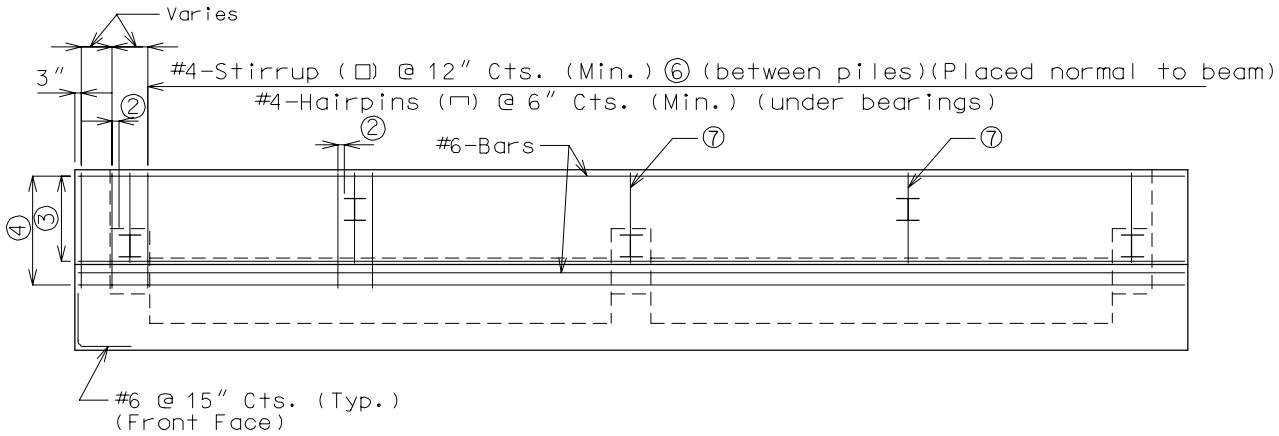

PLAN OF BEARING BEAM BELOW LOWER KEYED CONSTRUCTION JOINT

Use hooked bars on both Approach Beam & Bearing Beam, top and bottom.

① 4-Bars (Min.) ⊂⊃ (top and bottom), see Table on page 3.1-3.
② Use 3" (Min.) and 6" (Max.) (Typ.).See Section 3.72 page 3.1-1.
③ 4-#6 Bars (Min.)⊂⊃ top, see page 3.3-1.
④ 4-#6 Bars (Min.)⊂⊃ bottom, see page 3.3-1.
⑤ Varies (18" Max.).
⑥ See Table on page 3.3-2.
⑦ Stirrup to be centered over pile (⊓ or ⊓\ Typ.).

GENERAL PLAN (SKEWED)

Reinforcement

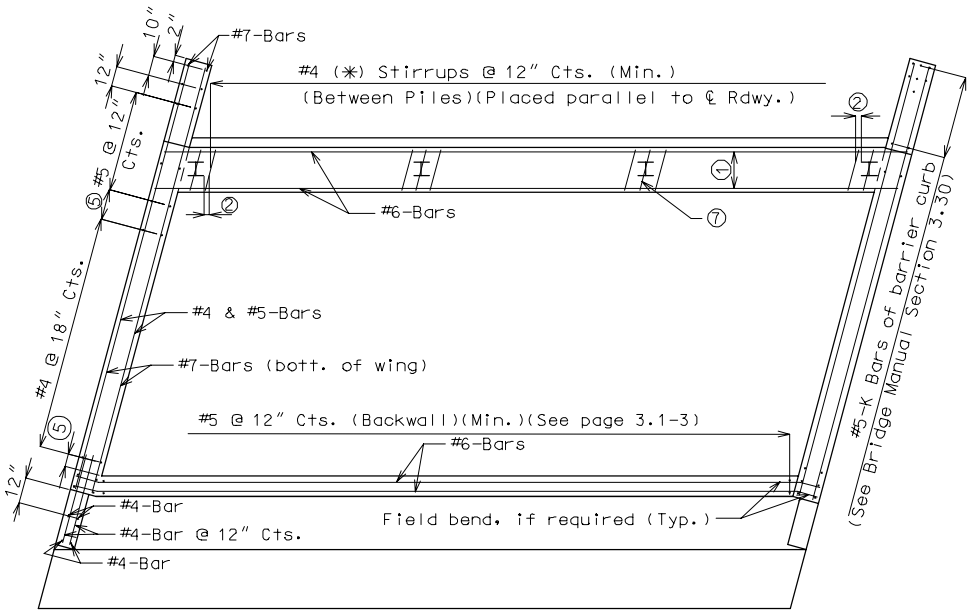

SECTION AT UPPER CONSTRUCTION JOINT

✳ See LONGITUDINAL SECTION THRU ABUTMENT on page 3.1-2.

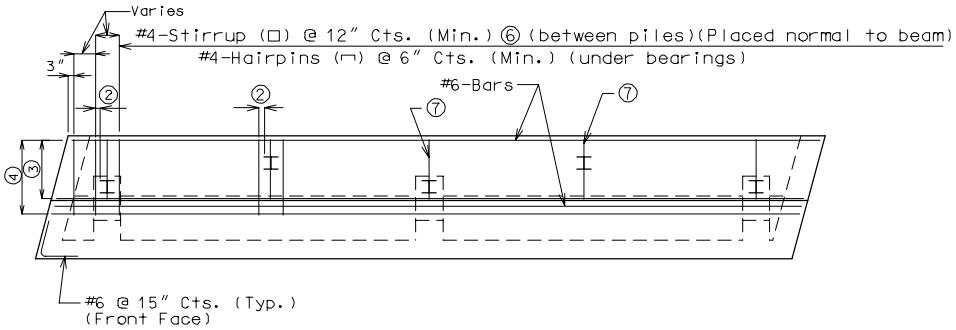

PLAN OF BEARING BEAM BELOW LOWER KEYED CONSTRUCTION JOINT

Use hooked bars on both Approach Beam & Bearing Beam, top and bottom.

① 4-Bars (Min.) ⊂⊃ (top and bottom), see Table on page 3.1-3.
② Use 3" (Min.) and 6" (Max.) (Typ.).See Section 3.72 page 3.1-1.
③ 4-#6 Bars (Min.)⊂⊃ top, see page 3.3-1.
④ 4-#6 Bars (Min.)⊂⊃ bottom, see page 3.3-1.
⑤ Varies (18" Max.).
⑥ See Table on page 3.3-2.
⑦ Stirrup to be centered over pile (⊓ or ⊓\ Typ.).

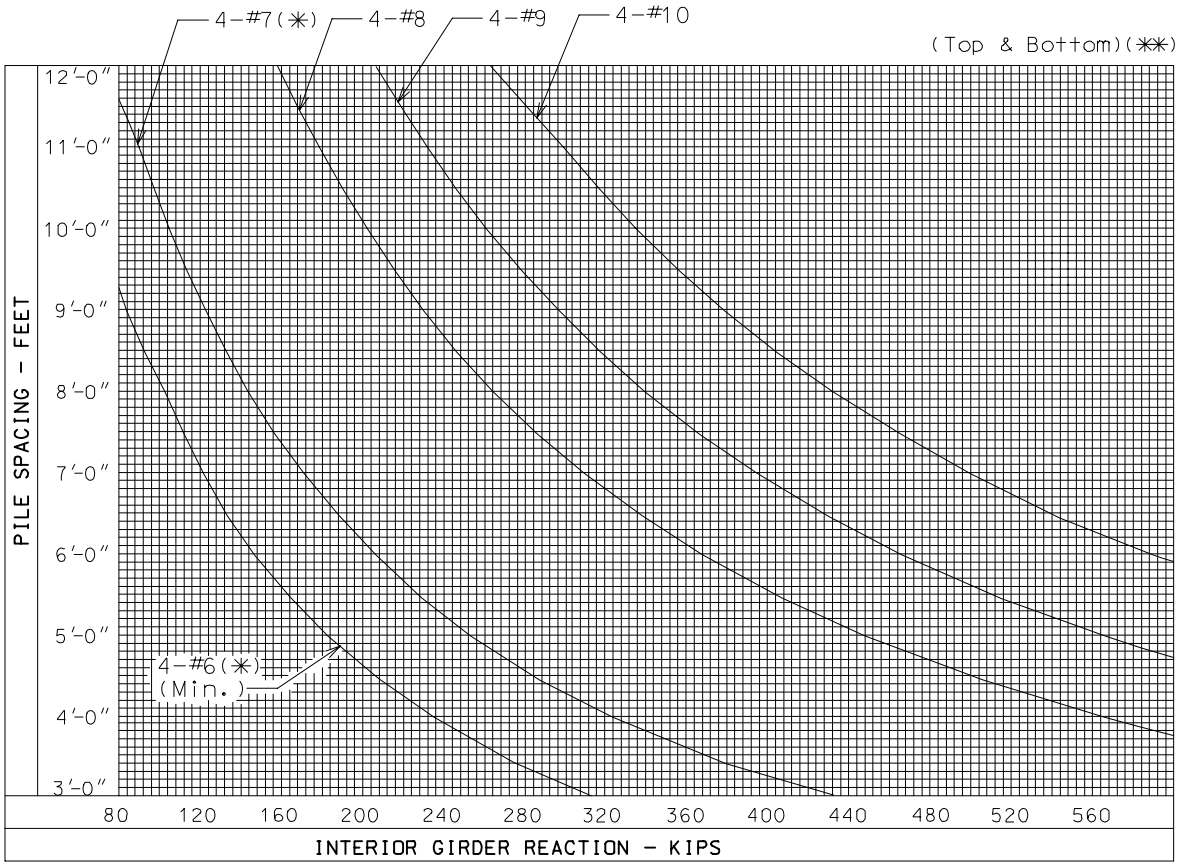

BEARING BEAM REINFORCEMENT

Note:
✳ Includes the minimum reinforcement criteria of providing reinforcement at least 1/3 greater than that required by analysis. (4-#8's and above meet min. reinf.)

✳✳ f'c=3,000 psi, fy=60,000 psi, information for beam reinforcement is continued on the next page.

Interior Stringer Reaction, Ru=1.3[DL(superstr.+Abut. Slab) ①]+2.17[(max.LL+I) (shear dist. ②)]

<u>Basic Assumption (continuous beam)</u>

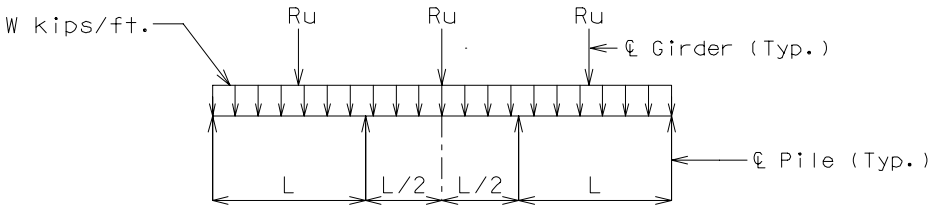

Ultimate Moment = $0.2RuL + 0.13WL^2$

Where: Ru = Ultimate Interior Girder Reaction, in kips

L = Pile Spacing, in feet

W = Uniform DL(Beam, Backwall and Apron), in kips/ft.

① In order to include the Abutment Slab Load in the bearing beam design, distribute slab weight of one-half Abutment Span evenly to all girders and add to the Interior Girder Reaction.

② If the computer output for max. (LL + I) is based on the moment distributioin factor, do not revise the loads for shear distrubution factor.

BEARING BEAM (CONT.) **Reinforcement**

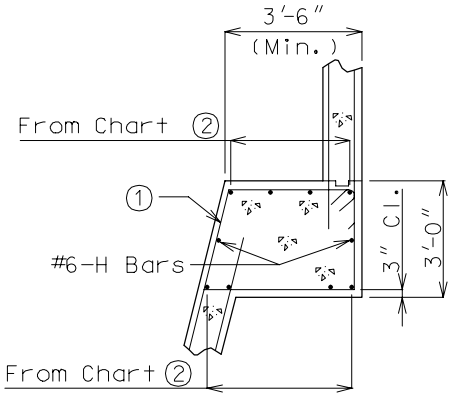

① STIRRUPS	MAX. PILE LOAD (SERVICE LOAD)	MAX. Ru (✳) (FACTORED LOAD)
#4 @ 12"	49 Tons	290 kips
#5 @ 12"	57 Tons	320 kips
#6 @ 12"	66 Tons	360 kips
#5 Dbl. @ 12"	70 Tons	400 kips

✳ Ru = Ultimate Interior Girder Reaction.

② See chart on page 3.3-1.

Design assumptions :

Beam reinforcement was determined by load factor design procedures.

f'c = 3,000 psi, fy = 60,000 psi, h = 36", d = 32.125" & b = 42"
Min. Reinf., $p(Min.) = 1.7(h/d)^2 (\sqrt{f'c/fy}) = 1.7 (36"/32.125")^2 (\sqrt{3,000/60,000}) = 0.001949$
Min. As = p (Min.) (bd) = 0.001949(42")(32.125") = 2.63 Sq. in. (4-#8), but need not exceed 1.3333 times area required by analysis (chart). (use 4-#6 when ℄ bearings are 12" or on either side of ℄ piles).

All stirrups in beam are to be the same size, except use #4 (⊓ 6") stirrups under the bearings.

DETAILS OF SAFETY BARRIER CURB

Reinforcement

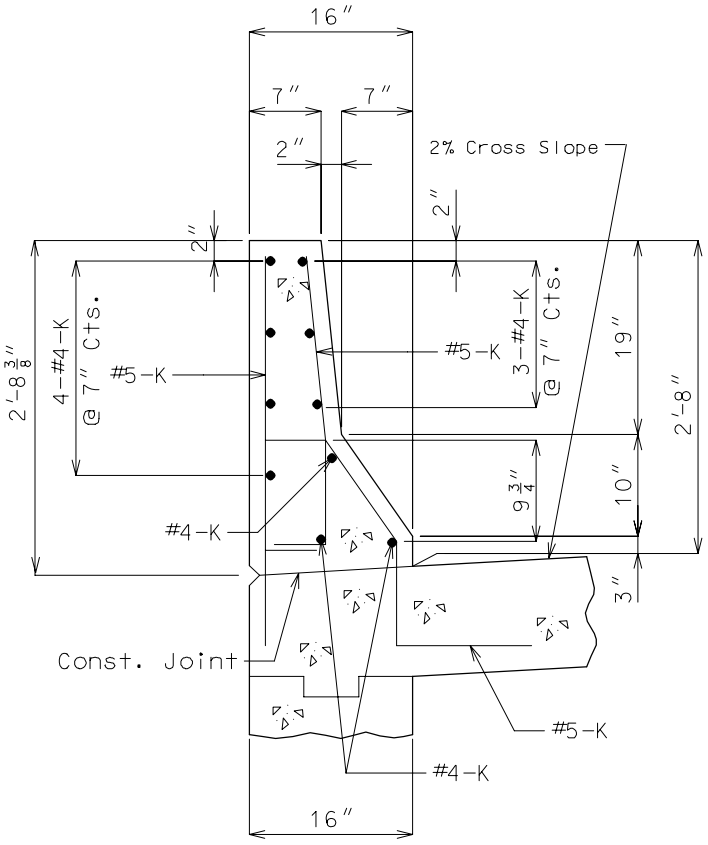

SECTION THRU
SAFETY BARRIER CURB
ON ABUTMENT SLAB

Note: For Safety Barrier Curb on Wing reinforcement, see Manual Section 3.30 (Superstructure).

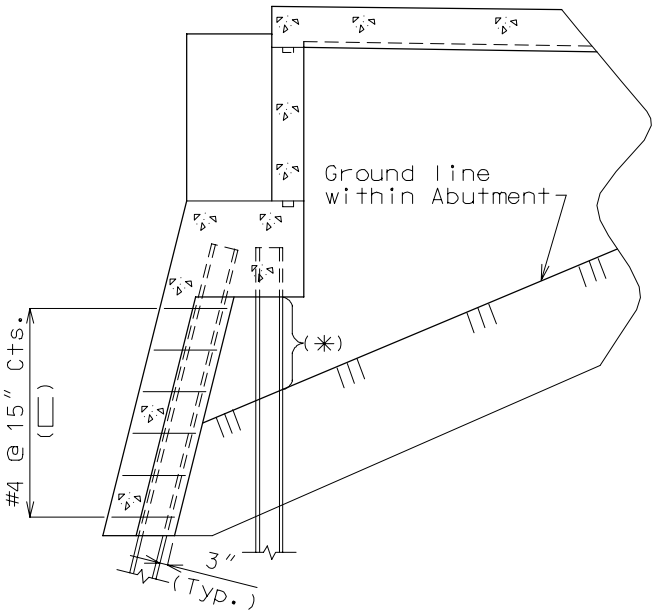

PART SECTION THRU BEARING BEAM

✳ Steel pile or steel pile shells. (See Bridge Manual Section 4 for appropriate note.)

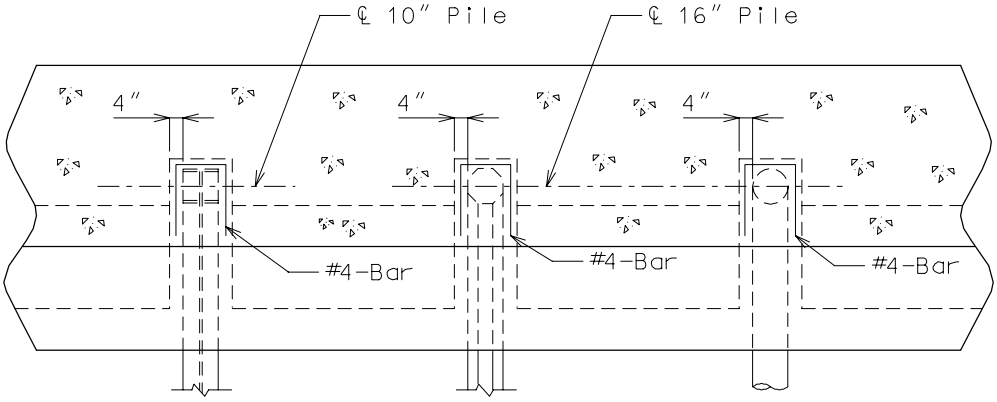

PLAN OF BEARING BEAM BELOW LOWER KEYED CONSTRUCTION JOINT
(Showing typical dimensions for different pile types)

CONCRETE PILES (CAST-IN-PLACE)

Details

The details of cast-in-place piles will be as indicated on Missouri Standard Plans (English Version) Std. Drawing 702.02., except that the shell and location type must be indicated on the Plans as specified on the Design Layout.

The KIND and TYPE of CIP pile shall be indicated in the "PILE DATA" table on Design Plans.

The TYPE of pile, trestle or foundation, may be selected from the illustrations shown below. When the illustrations indicate that there would be both trestle and foundation piles on the same structure, use all piles as trestle piles through out the structure, regardless of the type of bent.

The shell, thick or thin, will not be indicated in the "PILE DATA" table, unless specified on the Design Layout. For SPC B, C & D, use thick shells only. See Section 3.74, pages 1.2.4 and 1.2.5.

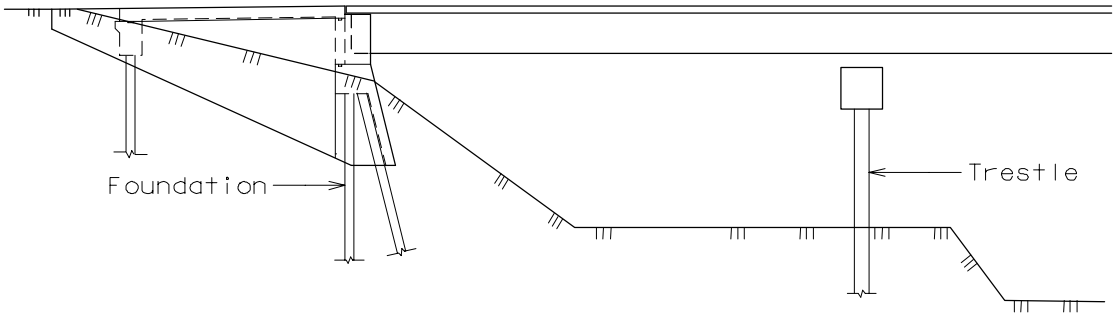

Note: Use Trestle Piles throughout.

STREAM CROSSING

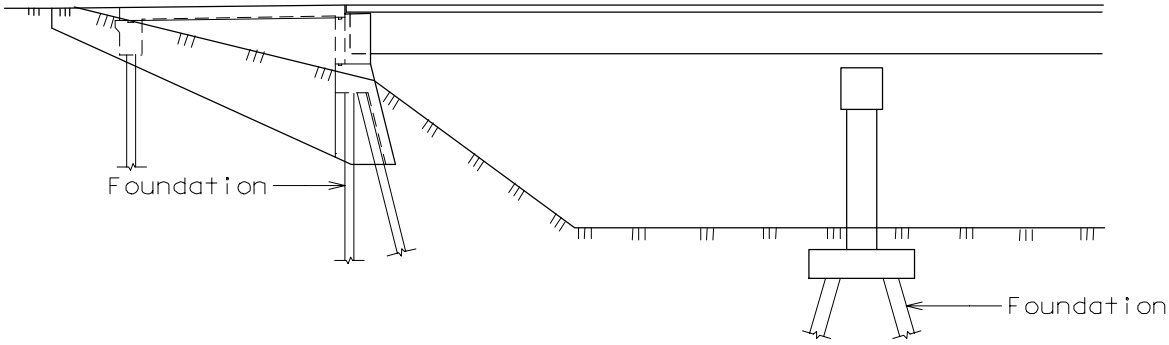

STREAM CROSSING

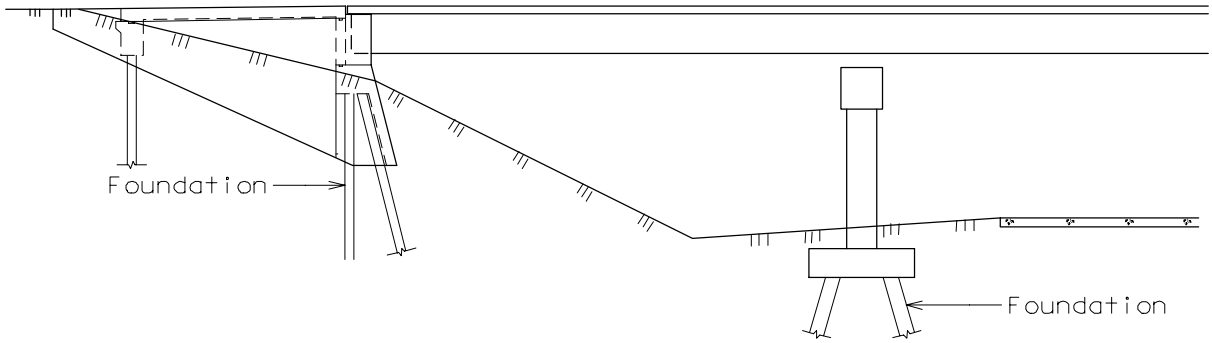

GRADE SEPARATION

DETAILS OF ACCESS DOOR

Details

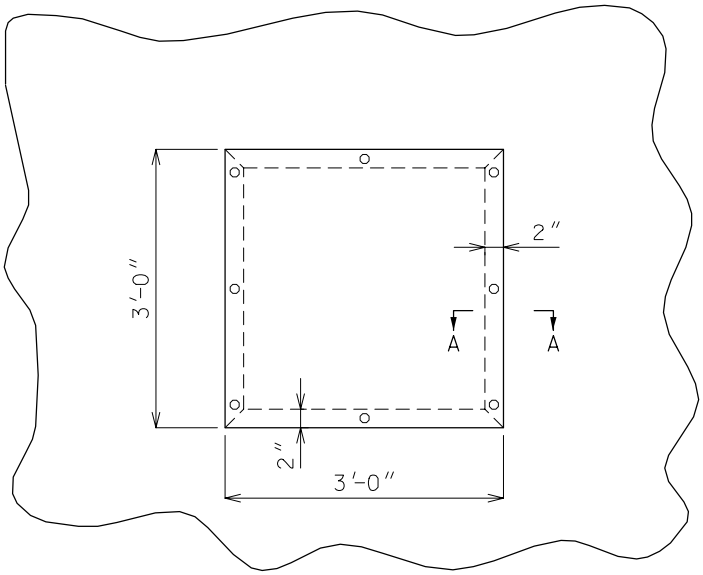

DOOR ELEVATION

Note:
Costs of the door are to be included in other items.

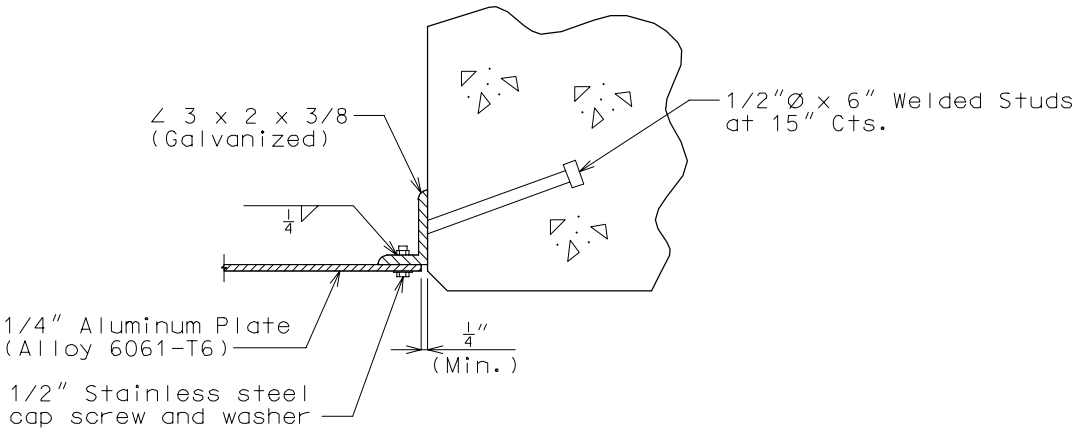

SECTION A-A

CONSTRUCTION JOINTS **Details**

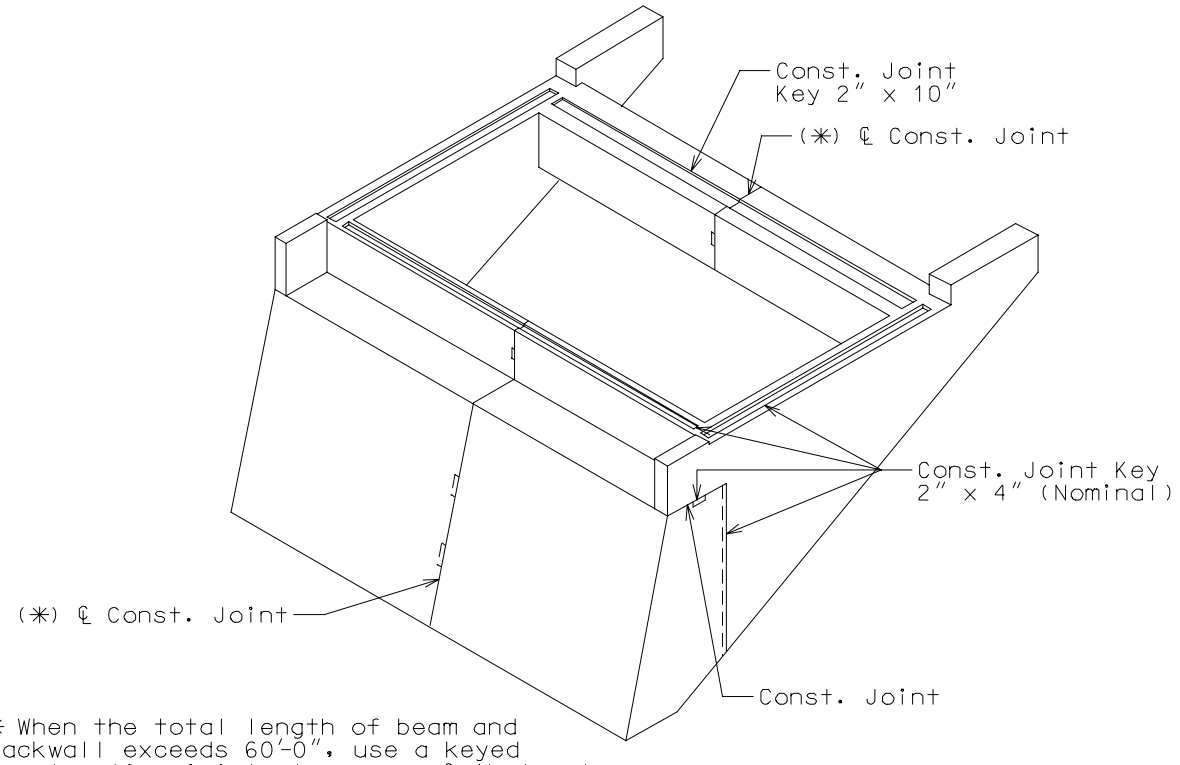
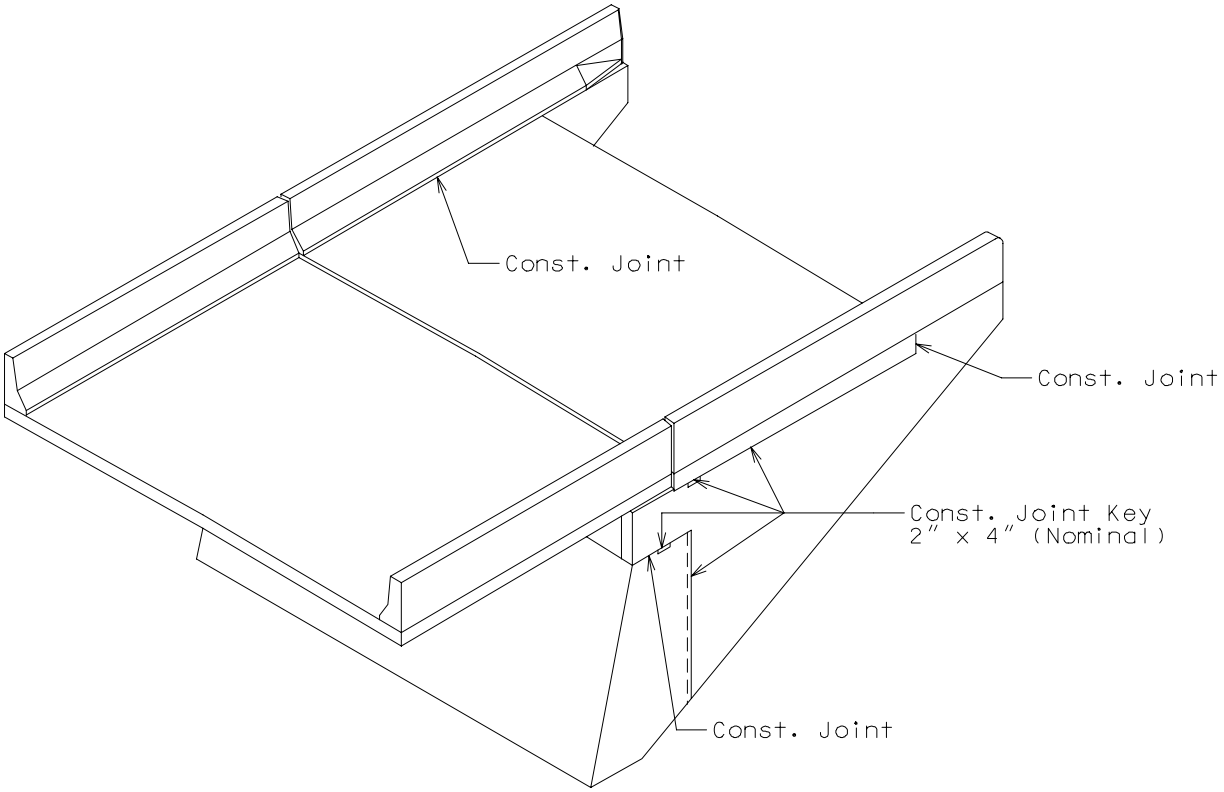
✳ When the total length of beam and backwall exceeds 60'-0", use a keyed construction joint at or near ℄ Abutment as shown, preferably located at a 1/4 point between piles.