Missouri Department of Transportation

Bridge Division

Bridge Design Manual

Section 3.72

Revised 02/18/2004

Click Here for Index

Index

3.72.1 Design

1.1 Unit Stresses - Loads - Distribution of Loads

1.2 Design Assumptions

3.72.2 Dimensions

2.1 General (2 sheets)

2.2 Front Sheet

3.72.3 Reinforcement

3.1 General (4 sheets)

3.2 Beam Reinforcement Chart for Wide Flange and Double-Tee Spans (2 sheets)

3.3 Beam Reinforcement Chart for Plate Girder Spans (2 sheets)

3.4 Beam Reinforcement Chart for Prestressed Girder Spans (2 sheets)

3.5 Anchorage of Piles for Seismic Performance Categories B, C & D (2 sheets)

3.6 Beam Reinforcement Special Cases

3.72.4 Details

4.1 Sway Bracing

4.2 Concrete Piles (Cast-In-Place)

4.3 Girder Chairs for Prestressed Girder

4.4 Miscellaneous Details for Prestressed Girder

UNIT STRESSES - LOADS - DISTRIBUTION

Design

DESIGN UNIT STRESSES (also see Section 4 - Note A1.1)

(1) Reinforced Concrete
Class B Concrete (Substructure) fc = 1,200 psi f'c = 3,000 psi
Reinforcing Steel (Grade 60) fs = 24,000 psi fy = 60,000 psi
n = 10
Ec = 3,122 ksi ($Ec = W^{1.5} \times 33 \sqrt{f'c}$, $Ec = 57,000 \sqrt{f'c}$)

(2) Structural Steel
Structural Carbon Steel (ASTM A709 Grade 36)
fs = 20,000 psi fy = 36,000 psi

(3) Piling
For pile capacity, see Bridge Manual Sec. 1.4 and 3.74.

(4) Overstress
The allowable overstresses as specified in AASHTO Article 3.22 shall be used where applicable for service loads.

LOADS

(1) Dead Loads
As specified in Bridge Manual Section 1.2.

(2) Live Load
As specified on the Design Layout.
Impact of 30% is to be used for design of the beam. No impact is to be used for design of any other portion of bent including the piles.

(3) Temperature, Wind and Frictional Loads
See Bridge Manual Section 1.2.4.

DISTRIBUTION OF LOADS

(1) Dead Loads
Loads from stringers, girders, etc. shall be concentrated loads applied at the intersection of centerline of stringer and centerline of bearing. Loads from concrete slab spans shall be applied as uniformly, distributed loads along the centerline of bearing.

(2) Live Load
Loads from stringers, girders, etc. shall be applied as concentrated loads at the intersection of centerline of stringer and centerline of bearing. For concrete slab spans distribute two wheel lines over 10'-0" (normal to centerline of roadway) of substructure beam. This distribution shall be positioned on the beam on the same basis as used for wheel lines in Traffic Lanes for Substructure Design (See Section 1.2).

(3) Temperature, Wind and Frictional Loads
See Bridge Manual Section 1.2.4.

DESIGN ASSUPTIONS

Design

LOADINGS

(1) Beam

The beam shall be assumed continuous over supports at centerline of piles.

Intermediate bent beam caps shall be designed so that service dead load moments do not exceed the cracking moment of the beam cap (AASHTO Article 8.13.3, Eq. 8-2)

(2) Piles

(a) Bending
Stresses in the piles due to bending need not be considered in design calculations for Seismic Performance Category A.

(b) Dead Loads, etc.
Dead load of superstructure and substructure will be distributed equally to all piles which are under the main portion of the bent.

GENERAL **Dimensions**

SEISMIC PERFORMANCE CATEGORY A

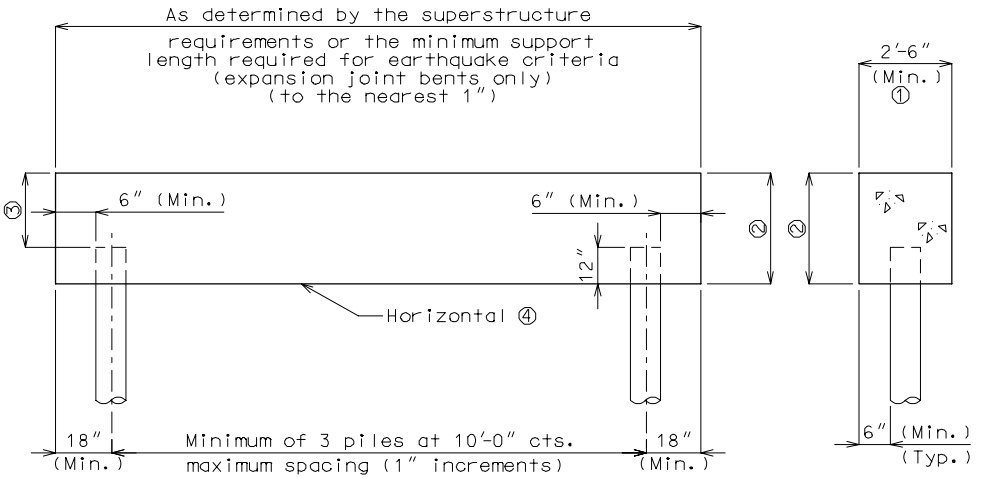

PART ELEVATION PART SECTION

① Use 2'-6" minimum or as determined by the superstructure requirements or the minimum support length required for earthquake criteria (expansion joint bents only) (3" increments).

② = 2'-9" (Min.) for Wide Flange and Double-Tee Girders (✳) or,
3'-0" (Min.) for Prestressed Girders and Plate Girders.

③ Check the clearance of the anchor bolt well to the top of pile. Increase the beam depth if needed.

④ If the depth at the end of the beam, due to the steps, exceeds 4'-6", the beam bottom should be stepped or sloped.

Notes:

Minimum edge distance for piles in beam is 6 inches (AASHTO Article 4.5.15.2).

For Seismic Category A, trestle friction piles should not be battered.
Point bearing trestle piles may still be battered at 2" per 12" in Category A only.

✳ Min. dimension for Double-Tee girders is taken at ℄ Bent or ℄ Structure
Min. edge dimensions are shown in this Manual section pages 3.1-3 and 3.1-4.

GENERAL (CONT.) **Dimensions**

SEISMIC PERFORMANCE CATEGORY B, C & D

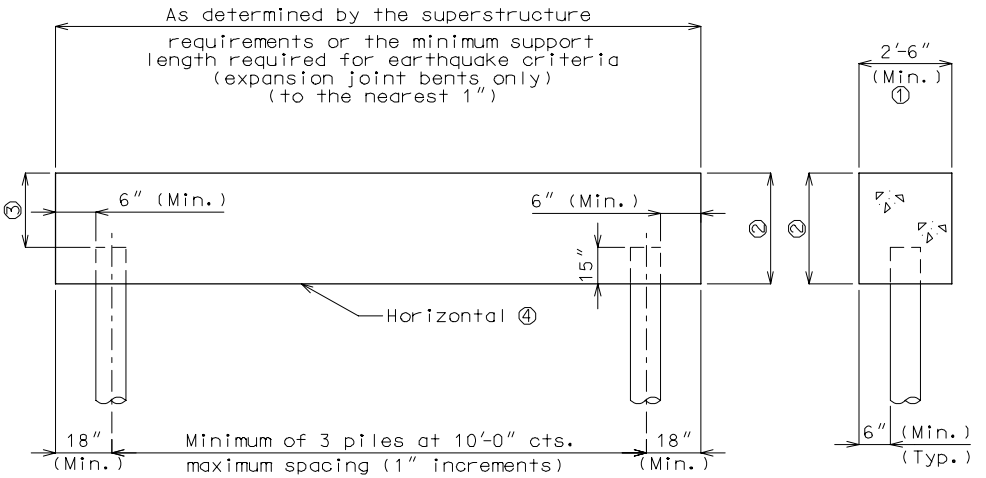

PART ELEVATION PART SECTION

① Use 2'-6" minimum or as determined by the superstructure requirements or the minimum support length required for earthquake criteria (expansion joint bents only) (3" increments).

② = 2'-9" (Min.) for Wide Flange and Double-Tee Girders (✳) or, 3'-3" (Min.) for Prestressed Girders and Plate Girders.

③ Check the clearance of the anchor bolt well to the top of pile. Increase the beam depth if needed.

④ If the depth at the end of the beam, due to the steps, exceeds 4'-6", the beam bottom should be stepped or sloped.

Notes:

Minimum edge distance for piles in beam is 6 inches (AASHTO Article 4.5.15.2).

For Seismic Category B, C & D, trestle piles are not to be battered at intermediate bents.

✳ Min. dimension for Double-Tee girders is taken at ℄ Bent or & Structure Min. edge dimensions are shown in this Manual section pages 3.1-3 and 3.1-4.

Note: The following are details and dimensions for the Plan View on the Front Sheets.

Details for unsymmetrical roadways will require dimensions tying Centerline Lane to Centerline Structure.

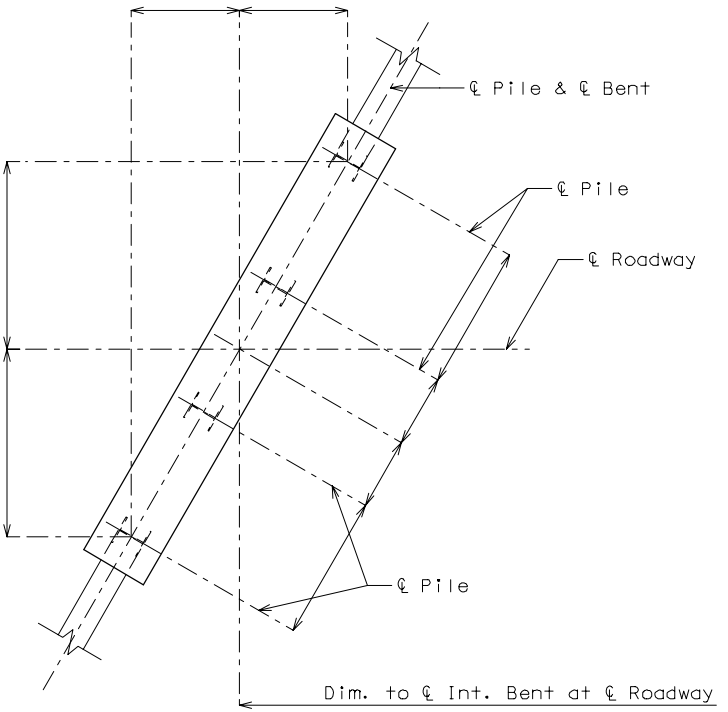

Table for Batter: Outside Piles		
	Type of Pile	Batter
SPC A	Steel Piles	2″ per 12″
	CIP Piles	No batter
SPC B, C & D	Steel Piles & CIP Piles	No batter

GENERAL

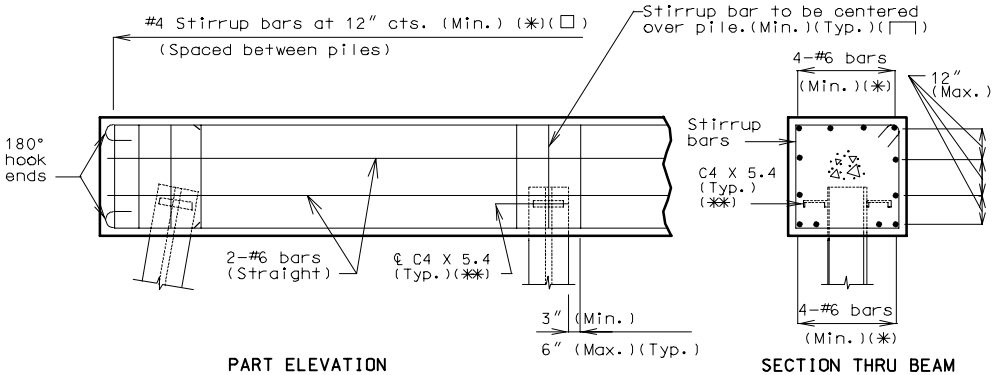

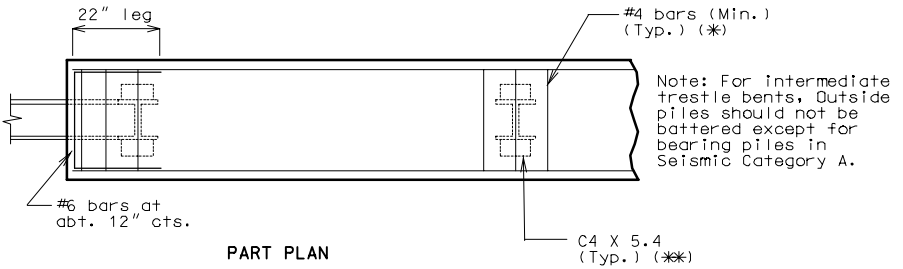

Note:

Locate #4 bars "⊓" under bearings where required to maintain a 6″ maximum spacing of combined stirrups. (#4 bars "⊓" are not required for Double-Tee Structures.)

✳ See table in this manual section for reinforcing requirements.

✳✳ Channel shear connectors are to be used in Seismic Performance Categories B, C and D. For details not shown, see this manual section, page 3.5-1.

When an expansion device is used at an intermediate bent, all reinforcement located entirely within the beam or extending into the beam shall be epoxy coated. See section 3.35 page 5.4-1 for details of protective coating and sloping top of beam to drain.

GENERAL (CONT.)

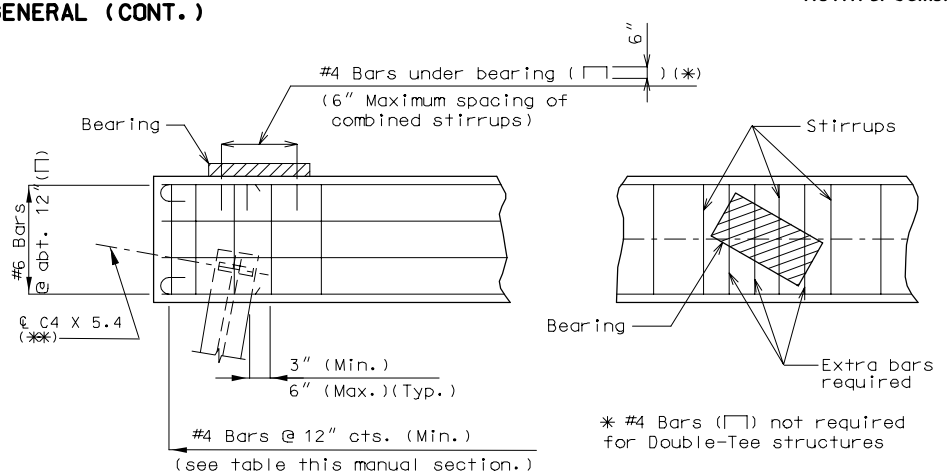

REINFORCEMENT UNDER BEARINGS

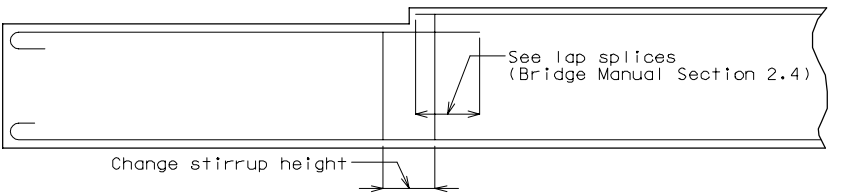

TRANSVERSE BEAM STEPS - OVER 3"
(ALSO, STEPS ACCUMULATING OVER 3")

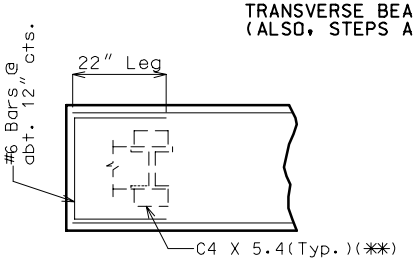

PART PLAN

✳✳ Channel shear connectors are to be used in Seismic Performance Categories B, C and D. For details not shown, see this manual section, page 3.5-1.

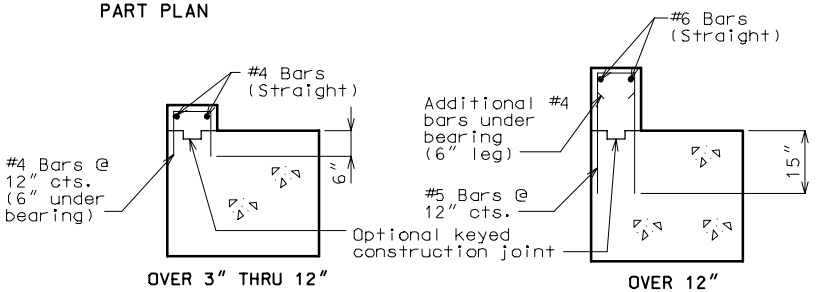

OVER 3" THRU 12" OVER 12"

LONGITUDINAL BEAM STEPS

GENERAL (CONT.)

PRESTRESS DOUBLE-TEE STRUCTURES

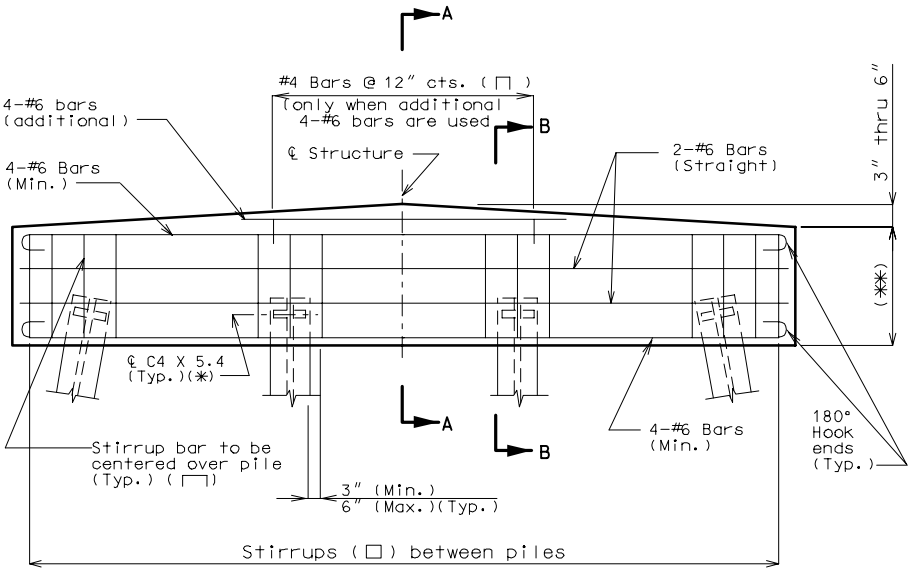

BENTS WITH 3" THRU 6" CROWN

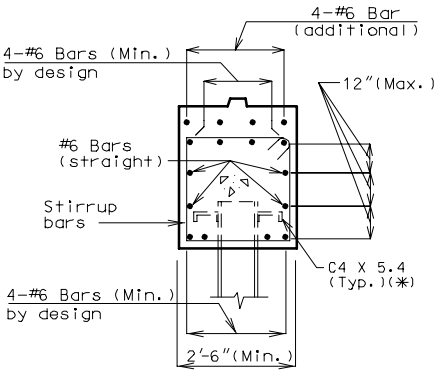

SECTION A-A

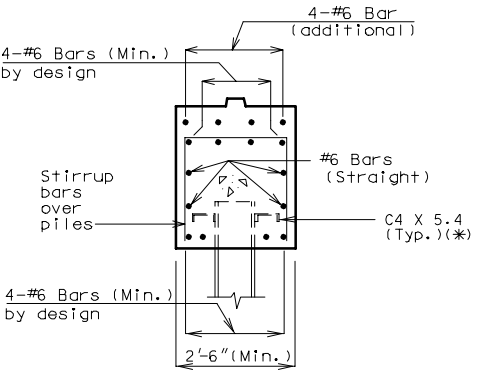

SECTION B-B

(✳) Channel shear connectors are to be used in Seismic Performance Categories B, C & D. For details not shown, see this Manual Section, page 3.5-1.

(✳✳) 2'-6" Min. for Seismic Performance Category A.
2'-9" Min. for Seismic Performance Categories B, C & D.

Note: use square ends on Prestress Double-Tee Structures.

GENERAL (CONT.)

PRESTRESS DOUBLE-TEE STRUCTURES (CONT.)

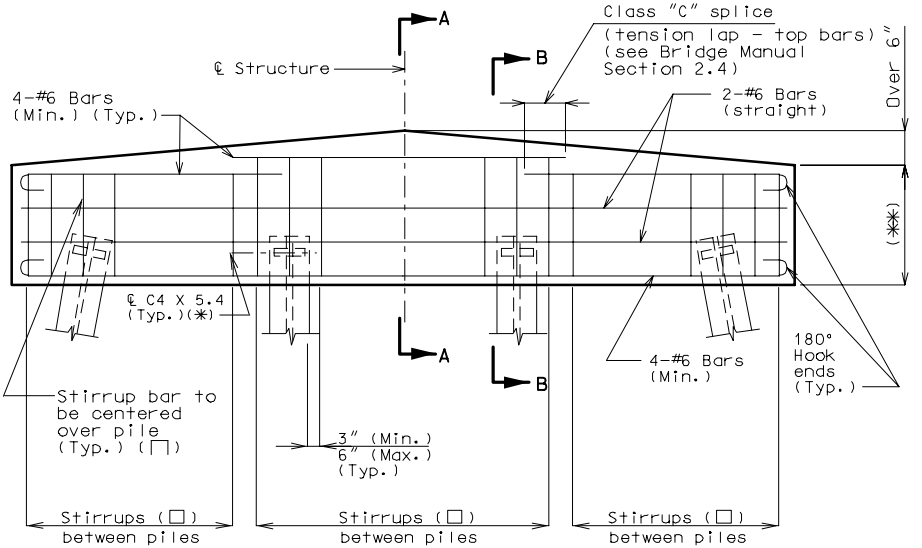

BENTS WITH CROWN OVER 6"

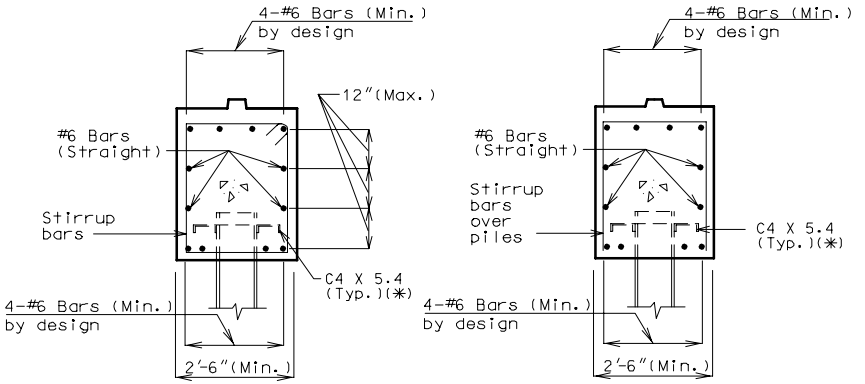

SECTION A-A SECTION B-B

(✱) Channel shear connectors are to be used in Seismic Performance Categories B, C & D. For details not shown, see this Manual Section, page 3.5-1.

(✱✱) 2'-6" Min. for Seismic Performance Category A.
2'-9" Min. for Seismic Performance Categories B, C & D.

Note: use square ends on Prestress Double-Tee Structures.

BEAM REINFORCEMENT CHARTS FOR WIDE FLANGE & DOUBLE-TEE SPANS

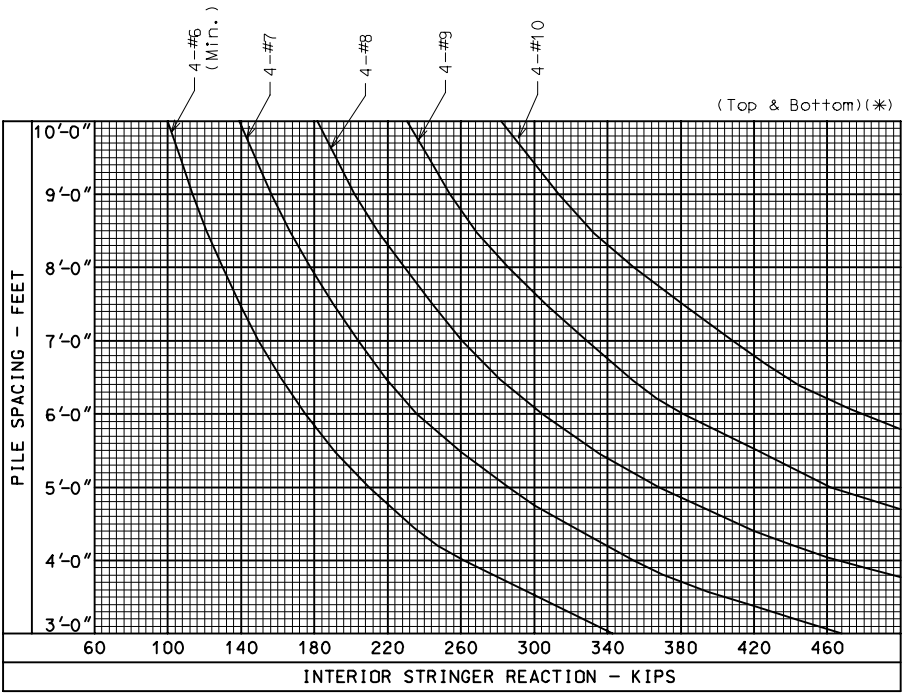

Note:
All reinforcement meets minimum requirements.

✳ f'c=3,000 psi, fy=60,000 psi, information for beam reinforcement is continued on the next page.

Interior Stringer Reaction, Ru=1.3[DL(superstr.)]+2.17[(max.LL+I)(shear dist.)]

Basic Assumption (continuous beam)

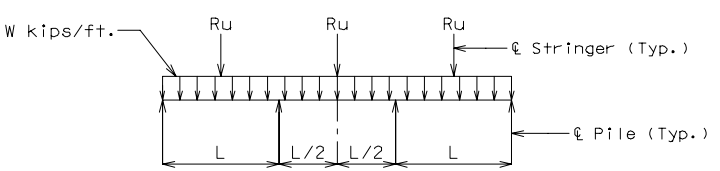

Ultimate Moment = $0.2RuL + 0.13WL^2$

Where: Ru = Ultimate Interior Stringer Reaction, in kips

L = Pile Spacing, in feet

W = Uniform DL(substr.), in kips/ft.

BEAM REINFORCEMENT CHARTS FOR WIDE FLANGE & DOUBLE-TEE SPANS (CONT.)

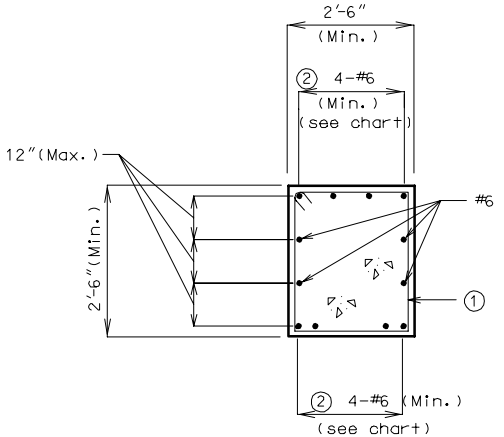

① STIRRUPS	MAX. PILE LOAD	MAX. Ru (✳)
#4 @ 12"	32 Tons	180 kips
#5 @ 12"	38 Tons	205 kips
#6 @ 12"	46 Tons	235 kips
#5 Dbl. @ 12"	55 Tons	275 kips
#6 Dbl. @ 12"	70 Tons	340 kips

✳ Ru = Ultimate interior stringer reaction.

② f'c = 3,000 psi, fy = 60,000 psi, h = 30", d = 27.5" & b = 30"
Min. Reinf., p(Min.) = $1.7(h/d)^2 (\sqrt{f'c/fy}) = 1.7\ (30''/27.5'')^2 (\sqrt{3{,}000/60{,}000}) = 0.001847$
Min. As = p (Min.) (bd) = 0.001847(30)(27.5) = 1.524 Sq. in. (4-#6), but need not exceed 1.3333 times area required by analysis (chart). (use 4-#6 when ℄ bearings are 12" or less on either side of ℄ piles).

Note:
Beam reinforcement was determined by load factor design procedures.
For special cases 1 or 2 see this section page 3.6-1.

All stirrups in beam are to be the same size, except use #4 (⊓ 6") stirrups under the bearings, however do not use #4 stirrups under the bearings of Prestressed Double-Tee structures.

BEAM REINFORCEMENT CHARTS FOR PLATE GIRDER SPANS

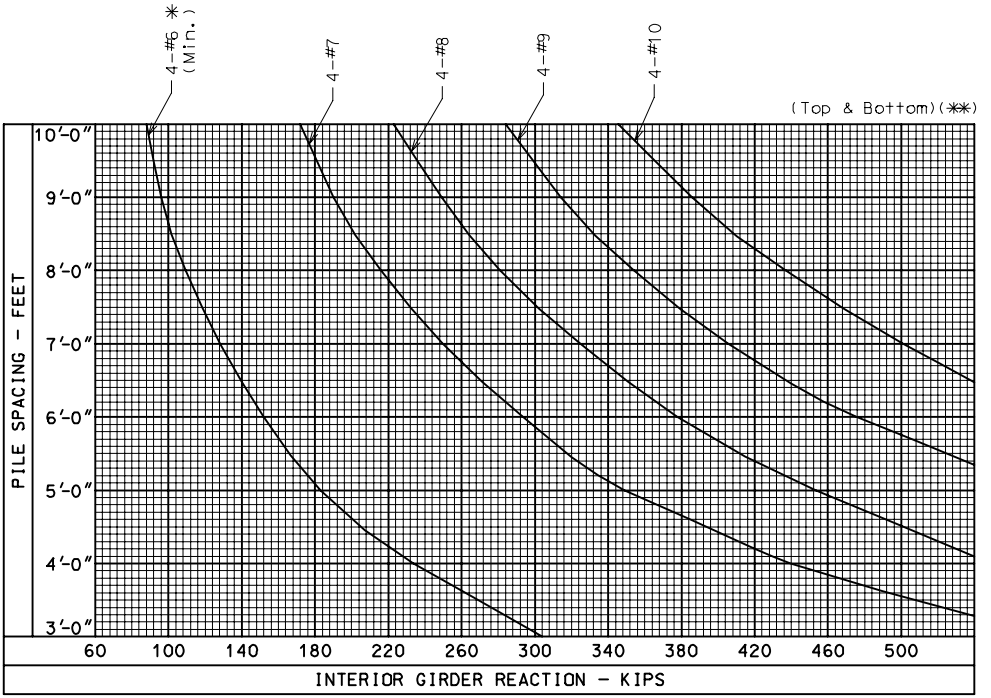

Note:
✳ Includes the minimum reinforcement criteria of providing reinforcement at least 1/3 greater than that required by analysis. (4-#7's and above meet min. reinf.)

✳✳ f'c=3,000, fy=60,000 psi, information for beam reinforcement is continued on the next page.

Interior Girder Reaction, Ru = 1.3[DL(superstr.)]+2.17[(max. LL+I)(shear dist.)]

Basic Assumption (continuous beam)

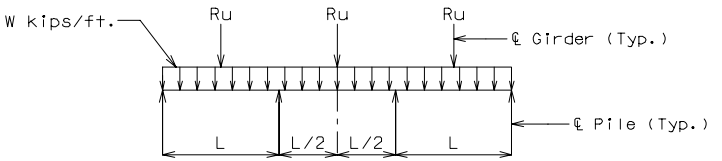

Ultimate Moment = $0.2RuL + 0.13WL^2$

Where: Ru = Ultimate Interior Girder Reaction, in kips

L = Pile Spacing, in feet

W = Uniform DL(substr.), in kips/ft.

Reinforcement

BEAM REINFORCEMENT CHARTS FOR PLATE GIRDER SPANS (CONT.)

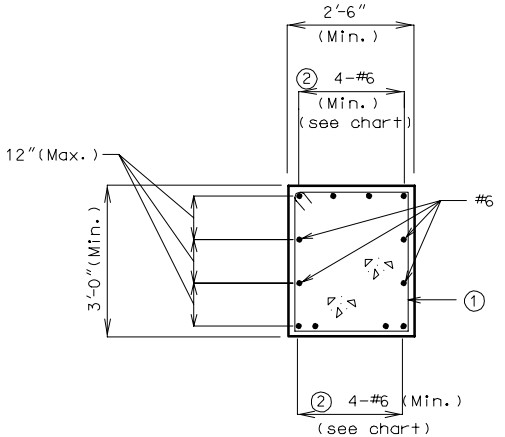

① STIRRUPS	MAX. PILE LOAD	MAX. Ru (✳)
#4 @ 12"	39 Tons	215 kips
#5 @ 12"	47 Tons	250 kips
#6 @ 12"	56 Tons	285 kips
#5 Dbl. @ 12"	67 Tons	335 kips
#6 Dbl. @ 12"	70 Tons	415 kips

✳ Ru = Ultimate interior girder reaction.

② f'c = 3,000 psi, fy = 60,000 psi, h = 36", d = 33.5" & b = 30"
Min. Reinf., p(Min.) = $1.7(h/d)^2 (\sqrt{f'c/fy}) = 1.7\ (36''/33.5'')^2 (\sqrt{3{,}000/60{,}000}) = 0.001792$
Min. As = p(Min.) (bd) = 0.001792(30)(33.5) = 1.801 Sq. in. (4-#7), but need not exceed 1.333 times area required by analysis (chart). (use 4-#6 bars when ℄ bearings are 12" or less on either side of ℄ piles).

Note:
Beam reinforcement was determined by load factor design procedures.
For special cases 1 OR 2 see this section page 3.6-1.

All stirrups in the beam are to be the same size, except use #4 (⊓ 6") stirrups under the bearings.

BEAM REINFORCEMENT CHARTS FOR PRESTRESSED GIRDER SPANS

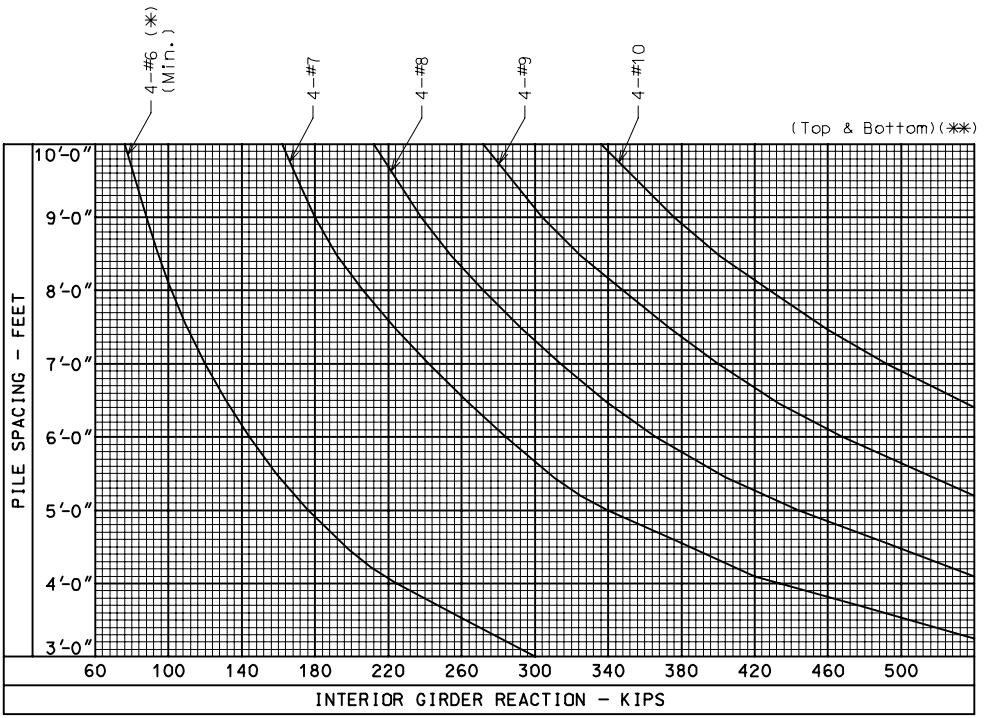

Note:
✳ Includes the minimum reinforcement criteria of providing reinforcement at least 1/3 greater than that required by analysis. (4-#7's and above meet min. reinf.)

✳✳ f'c=3,000 psi, fy=60,000 psi, information for beam reinforcement is continued on the next page.

Interior Girder Reaction, Ru=1.3[DL(superstr.)]+2.17[(max.LL+I)(shear dist.✳✳✳)]

Basic Assumption (continuous beam)

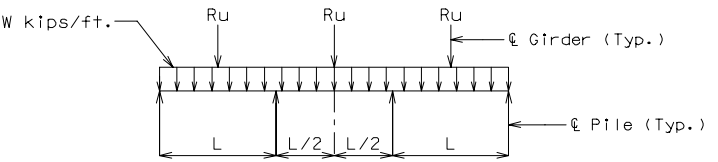

Ultimate Moment = $0.2RuL + 0.13WL^2$

Where: Ru = Ultimate Interior Girder Reaction, in kips

L = Pile Spacing, in feet

W = Uniform DL(substr.), in kips/ft.

✳✳✳ If the computer output for max.(LL + I) is based on the moment distribution factor, do not revise the loads for shear distribution factor.

BEAM REINFORCEMENT CHARTS FOR PRESTRESSED GIRDER SPANS (CONT.)

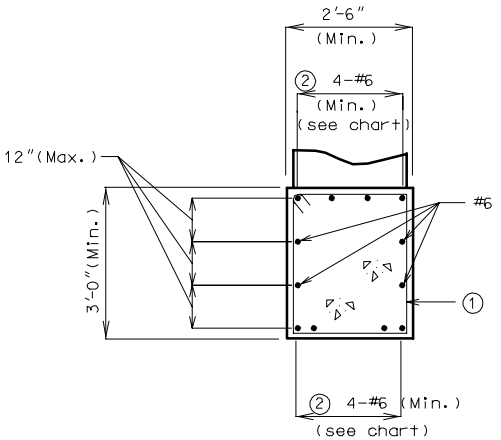

① STIRRUPS	MAX. PILE LOAD	MAX. Ru (✳)
#4 @ 12"	39 Tons	215 kips
#5 @ 12"	47 Tons	250 kips
#6 @ 12"	56 Tons	285 kips
#5 Dbl. @ 12"	67 Tons	335 kips
#6 Dbl. @ 12"	70 Tons	415 kips

✳ Ru = Ultimate interior girder reaction.

② f'c = 3,000 psi, fy = 60,000 psi, h = 36", d = 33.5" & b = 30"
Min. Reinf., p(Min.) = $1.7(h/d)^2 (\sqrt{f'c/fy}) = 1.7\ (36''/33.5'')^2\ (\sqrt{3{,}000/60{,}000}) = 0.001792$
Min. As = p(Min.) (bd) = 0.001792(30)(33.5) = 1.801 Sq. in. (4-#7), but need not exceed 1.333 times area required by analysis (chart). (use 4-#6 bars when ℄ bearings are 12" or less on either side of ℄ piles).

Note:
Beam reinforcement was determined by load factor design procedures.
For special cases 1 or 2 see this section page 3.6-1.

All stirrups in the beam are to be the same size, except use #4 (⊓ 6") stirrups under the bearings.

ANCHORAGE OF PILES FOR SEISMIC CATEGORIES B, C & D

STEEL PILE

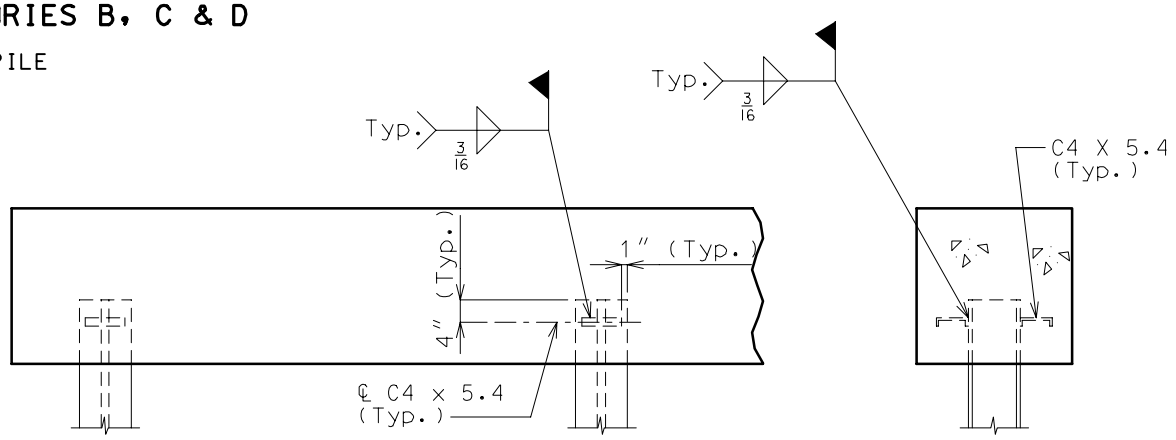

PART ELEVATION

SECTION THRU BEAM

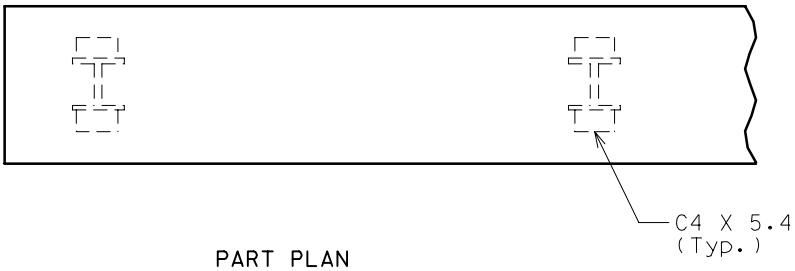

PART PLAN

ANCHORAGE OF PILES FOR SEISMIC CATEGORIES B, C & D (CONT.)

CAST-IN-PLACE PILE

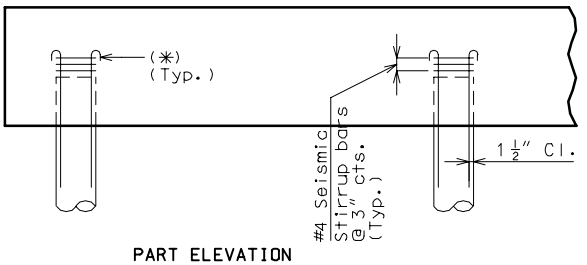

PART ELEVATION

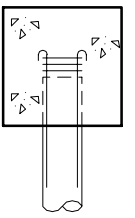

SECTION THRU BEAM

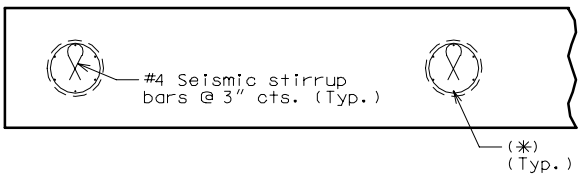

PART PLAN

(✳) See Bridge Manual Section 3.74 (Piling) for anchorage reinforcement required.

BEAM REINFORCEMENT SPECIAL CASES

SPECIAL CASE I

If ℄ bearing is 12″ or less on either side of ℄ piles, for all piles (as shown above), use 4-#6 top and bottom and #4 at 12″ cts. (stirrups), regardless of pile size.

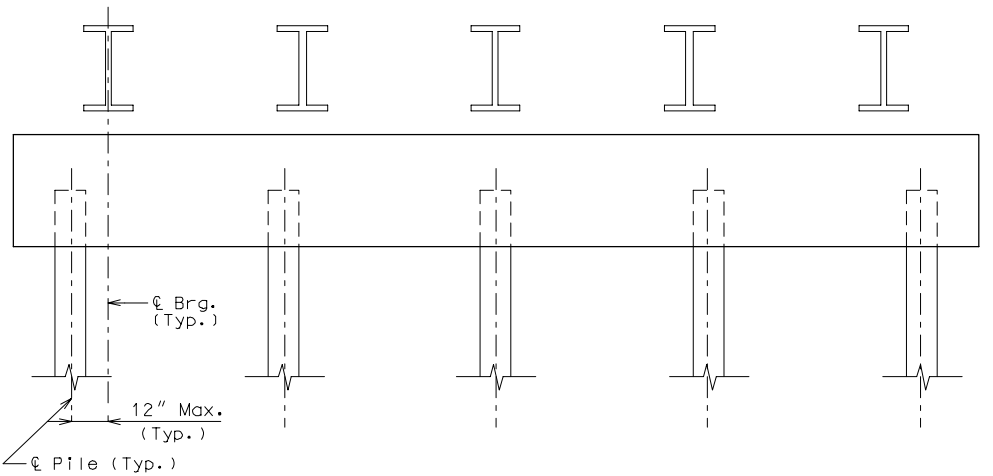

SPECIAL CASE II

When beam reinforcement is to be designed assuming piles to take equal force, design for negative moment in the beam over the interior piles.

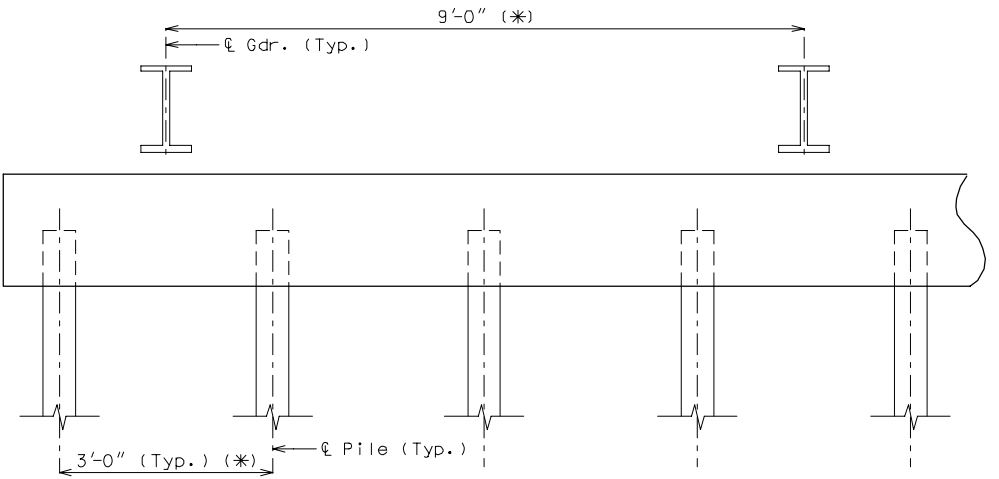

(✳) Dimensions shown are for illustration purposes only.

SWAY BRACING **Details**

(Use when specified on Design Layout)

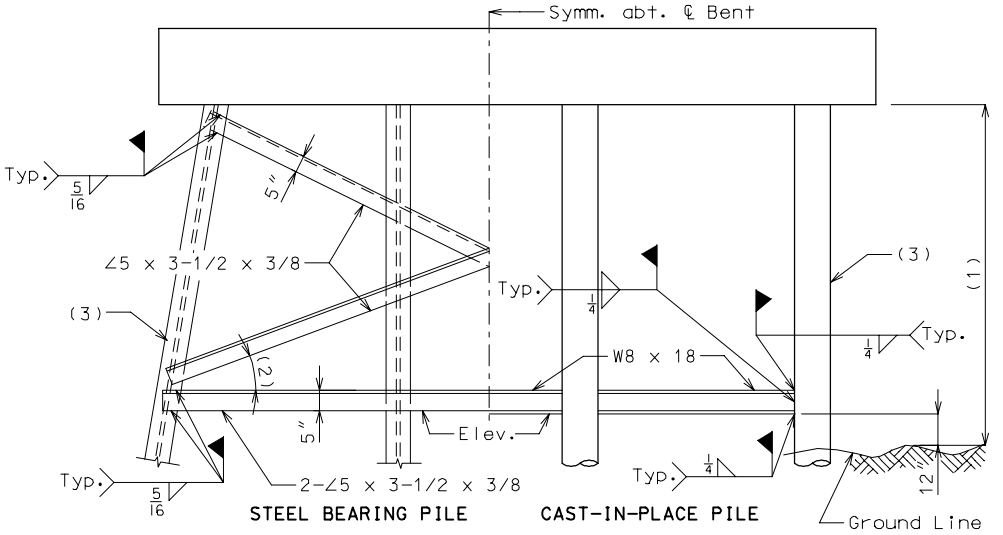

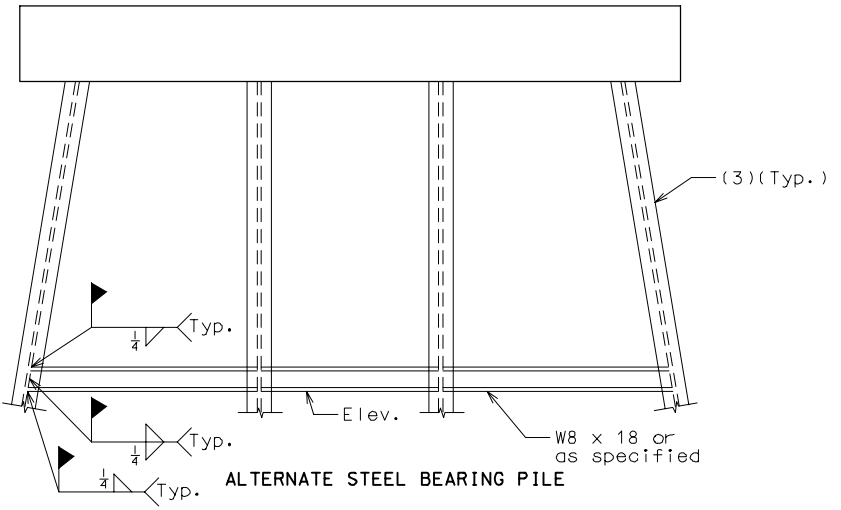

Attention Designers and Detailers:

(1) Omit sway bracing if less than 10'-0" (Cast-In-Place piles only).

(2) When angle slope of bracing becomes less than 15° to the horizontal, omit the diagonal angles and use the horizontal angles only (Except on four pile bents, then use alternate shown above).

(3) See Table for Batter Piles in Sec. 3.72, page 2.2-1.

Note: In case of a large number of piles, see the Structural Project Manager.

CONCRETE PILES (CAST-IN-PLACES)

Details

The details of cast-in-place piles will be as indicated on Missouri Standard Plans (English Version) Std. Drawing 702.02., except that the shell and location type must be indicated on the Plans as specified on the Design Layout.

The KIND and TYPE of CIP pile shall be indicated in the "PILE DATA" table on Design Plans.

The TYPE of pile, trestle or foundation, may be selected from the illustrations shown below. When the illustrations indicate that there would be both trestle and foundation piles on the same structure, use all piles as trestle piles throughout the structure, regardless of the type of bent.

The shell, thick or thin, will not be indicated in the "PILE DATA" table, unless specified on the Design Layout.

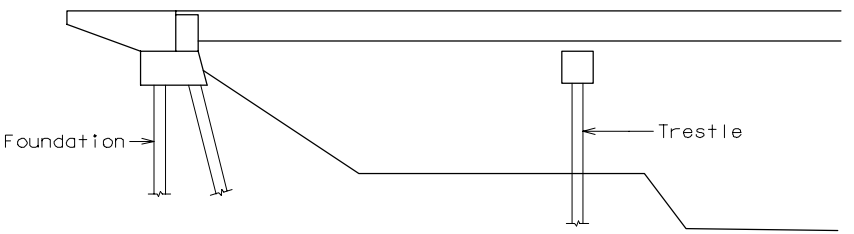

STREAM CROSSING

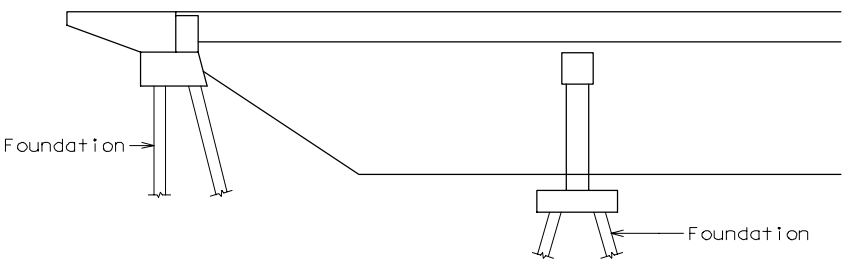

STREAM CROSSING

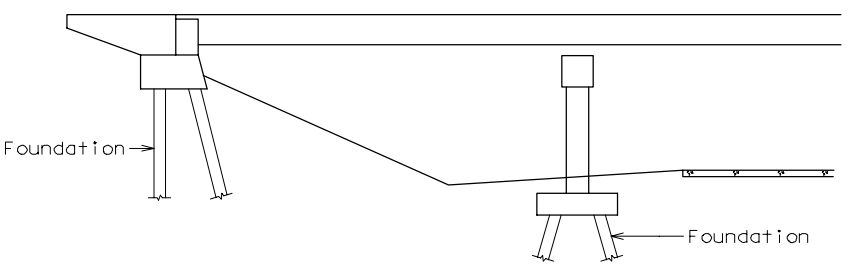

GRADE SEPARATION

GIRDER CHAIRS FOR PRESTRESSED GIRDER

Details

At intermediate bents where prestressed girder sizes change, use girder chairs.

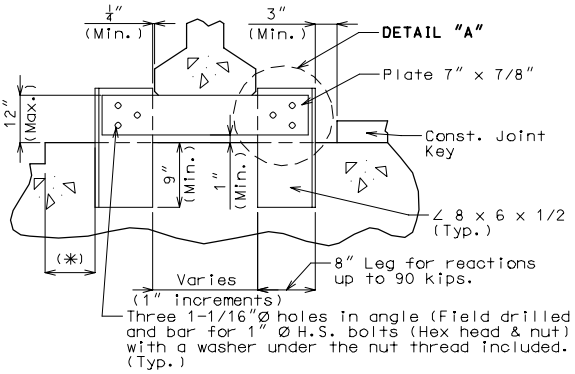

(*) 3" Minimum when using beam step.

FRONT ELEVATION

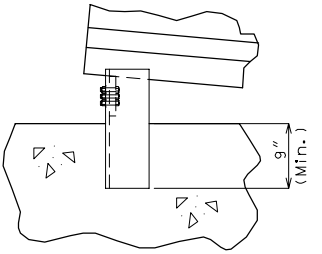

SIDE ELEVATION

SERVICE LOAD REACTIONS	VERTICAL ANGLE	HORIZONTAL BAR
90 Kips	8 X 6 X 1/2	7" X 7/8"

Use DL1 and 50 #/Sq. Ft construction load for reactions.

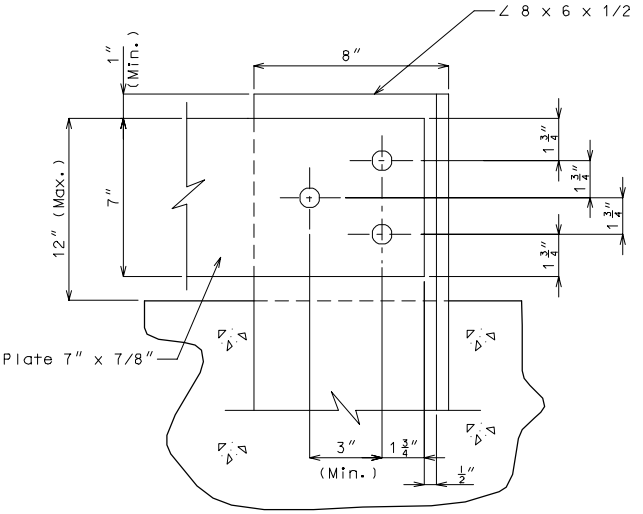

DETAIL A

PRESTRESSED GIRDERS(INTEGRAL INT. BENT)

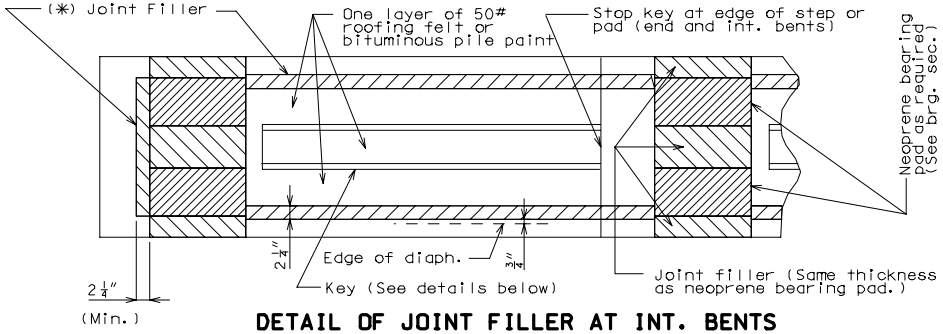

DETAIL OF JOINT FILLER AT INT. BENTS
(Continuous Spans - No Longitudinal Beam Steps)

Note: See Bridge Manual Section 3.55 for the use of dowel bars at fixed bents of prestressed I-girders and the use of shear blocks.

(✱) 1/4" Joint Filler for a P/S Double Tee Structure

1/2" Joint Filler for a P/S I-Girder Structure

PRESTRESSED GIRDERS(NON-INTEGRAL INT. BENT)

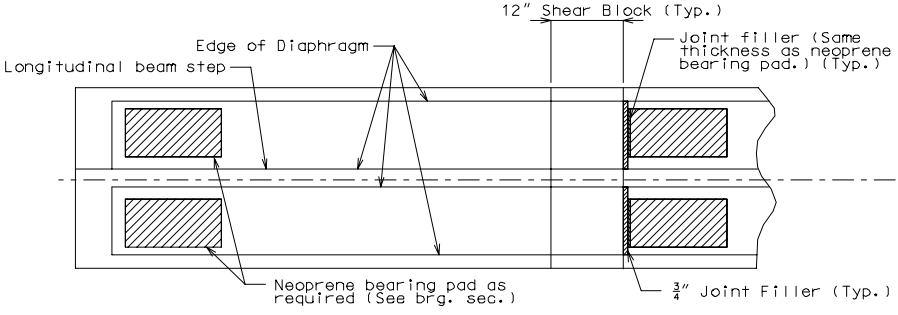

DETAIL OF JOINT FILLER AT INT. BENTS
(Longitudinal Beam Step and Shear Blocks shown)

DETAILS OF CONST. JOINT KEY

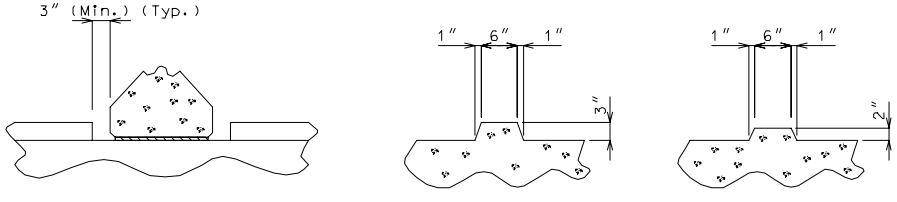

PART ELEVATION

PART SECTION THRU KEYS (P/S I-GIRDERS)

PART SECTION THRU KEYS (P/S DOUBLE TEE GDRS.)