Missouri Department of Transportation

Bridge Division

Bridge Design Manual

Section 3.62

Revised 09/01/2004

Click Here for Index

3.62.1 General

1.1 Wall Type Selection (2 Sheets)
1.2 Loads (8 Sheets)

3.62.2 Mechanically Stabilized Earth (MSE) Walls

2.1 Design (2 Sheets)
2.2 Details (5 Sheets)

3.62.3 Cast-In-Place Concrete Retaining Walls

3.1 Unit Stresses (1 Sheet)
3.2 Design (16 Sheets)
3.3 Example 1: Spread Footing Cantilever Wall (11 Sheets)
3.4 Example 2: L-Shaped Cantilever Wall (13 Sheets)
3.5 Example 3: Pile Footing Cantilever Wall (13 Sheets)
3.6 Dimensions (6 Sheets)
3.7 Reinforcement (6 Sheets)
3.8 Details (7 Sheets)

3.62.1 General

AASHTO 5.1

Retaining wall shall be designed to withstand lateral earth and water pressures, including any live and dead load surcharge, the self weight of the wall, temperature and shrinkage effect, live load and collision forces, and earthquake loads in accordance with the general principles of AASHTO Section 5 and the general principles specified in this section.

1.1 Wall Type Selection

AASHTO 5.2.1

Selection of wall type shall be based on an assessment of the magnitude and direction of loading, depth to suitable foundation support, potential for earthquake loading, presence of deleterious environmental factors, wall site cross-sectional geometry, proximity of physical constraints, tolerable and differential settlement, facing appearance, and ease and cost of construction.

The following wall types are the most commonly used in MoDOT projects

- Mechanically Stabilized Earth Retaining Walls
- Cast-In-Place Concrete Cantilever Retaining Walls
  - Cantilever Walls on Spread Footings
  - Cantilever Wall on Pile Footings
  - L-Shaped Walls on Spread Footings

Mechanically Stabilized Earth (MSE) Retaining Walls

AASHTO 5.2.1.4 & 5.8

MSE retaining walls use precast block or panel like facing elements combined with either metallic or geosynthetic tensile reinforcements in the soil mass. MSE walls are preferred over cast-in-place walls because they are usually more economical. Other advantages include a wide variety of design styles, ease and speed of installation, and their ability to accommodate total and differential settlements. Wall design heights upwards of 80 feet are technically feasible (FHFW-SA-96-071). MSE walls may be used to retain fill for end bents of bridge structures.

Situations exist where the use of MSE walls is either limited or not recommended. Some obstacles such as drop inlets, sign truss pedestals or footings, and fence posts may be placed within the reinforcing strip area, however, these obstacles increase the difficulty and expense of providing sufficient reinforcing strips for stability. Box culverts and highway drainage pipes may run through MSE walls, but it is preferable not to run the pipes close to or parallel to the walls. Utilities other than highway drainage should not be constructed within the reinforcing strip area. Be cautious when using MSE walls in a flood plain. A flood could cause scouring around the reinforcement and seepage of the backfill material. Soil reinforcements should not be used where exposure to ground water contaminated by acid mine drainage or other industrial pollutants as indicated by a low pH and high chlorides and sulfates exist. Galvanized metallic reinforcements shall not be used where stray electrical ground currents could occur as would be present near an electrical substation.

Sufficient right-of-way is required to install the reinforcing strips which extend into the backfill area at least 8 feet, 70 % of the wall height or as per design requirements, whichever is greater. Finally, barrier curbs constructed over or in line with the front face of the wall shall have adequate room provided laterally between the back of the wall facing and the curb or slab so that load is not directly transmitted to the top wall facing units.

Concrete Cantilever Wall on Spread Footing

Concrete cantilever walls derive their capacity through combinations of dead weight and structural resistance. These walls are constructed of reinforced concrete.

Concrete cantilever walls are used when MSE walls are not a viable option. Cantilever walls can reduce the rock cut required and can also provide solutions when there are right of way restrictions. Concrete walls also provide better structural capacity when barrier curbs on top of the walls are required.

Counterforts are used on rare occasions. Sign-board type retaining walls are a special case of counterfort retaining walls. They are used where the soil conditions are such that the footings must be placed well below the finished ground line. For these situations the wall is discontinued 12 inches below the ground line or below the frost line. Counterforts may also be a cost-savings option when the wall height approaches 20 feet (Foundation Analysis and Design by Joseph E. Bowles, 4th ed., 1988). However, other factors such as poor soil conditions, slope of the retained soil, wall length and uniformity in wall height should also be considered before using counterforts.

Concrete Cantilever Wall on Pile Footing

Concrete cantilever walls on pile footings are used when the soil conditions do not permit the use of spread footings. These walls are also used when an end bent requires wings longer than 22 feet. In these cases a stub wing is left attached to the end bent and the rest of the wing is detached to become a retaining wall.

Concrete L-Shaped Retaining Wall on Spread Footings

Concrete L-Shaped walls are cantilever walls without heels. These walls are used when there are space limitations for cantilever walls. Since there is no heel the height of these walls is limited to about 7 feet depending on the soil conditions and the slope of the retained soil.

L-Shaped Walls are often used next to roadways where the footings are frequently used as shoulders and where the wall will require structural capacity for collision forces.

1.2 Loads

Dead Loads

Dead loads shall be determined from the Weight of Materials Table of the Loads Section in the Bridge Manual.

Equivalent Fluid Pressure (Earth Pressures)

AASHTO 3.20.1

For determining equivalent earth pressures for Group Loadings I through VI the Rankine Formula for Active Earth Pressure shall be used.

Rankine Formula: $P_a = \frac{1}{2} C_a \gamma_s H^2$ where:

$$C_a = \cos\delta \left[\frac{\cos\delta - \sqrt{\cos^2\delta - \cos^2\phi}}{\cos\delta + \sqrt{\cos^2\delta - \cos^2\phi}} \right]$$

P_a = equivalent active earth pressure

C_a = coefficient of active earth pressure

H = height of the soil face at the vertical plane of interest

γ_s = unit weight of soil

δ = slope of fill in degrees

ϕ = angle of internal friction of soil in degrees

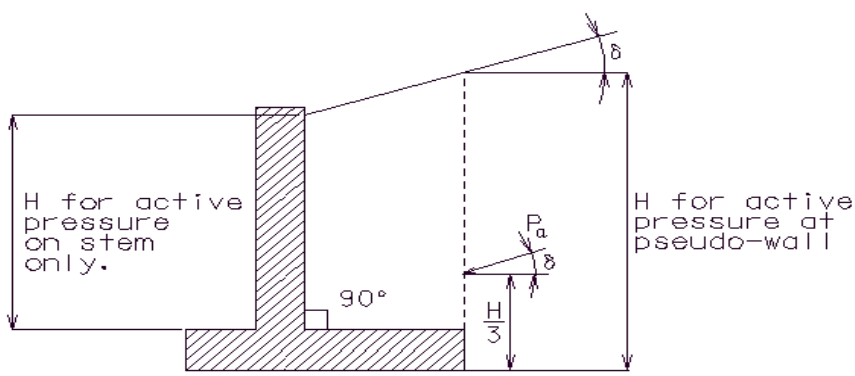

Example

Given

δ = 3:1 (H:V) slope

ϕ = 25°

γ_s = 0.120 kcf

H = 10 ft

$$\delta = \arctan\left[\frac{1}{3}\right] = 18.4°$$

$$C_a = \cos(18.4°)\left[\frac{\cos(18.4°) - \sqrt{\cos^2(18.4°) - \cos^2(25°)}}{\cos(18.4°) + \sqrt{\cos^2(18.4°) - \cos^2(25°)}}\right] = 0.515$$

P_a = (1/2)(0.515)(0.120 kips/ft^3)(10 ft)^2 = 3.090 kips per foot of wall length

The ϕ angle shall be determined by the Materials Division from soil tests. If the ϕ angle cannot be provided by the Materials Division a ϕ angle of 27 degrees shall be used.

Drainage shall be provided to relieve water pressure from behind all cast-in-place concrete retaining walls. If adequate drainage can not be provided then walls shall be designed to resist the maximum anticipated water pressure.

Surcharge Due to Point, Line, and Strip Loads

Surcharge due to point and line loads on the soil being retained shall be included as dead load surcharge. The effect of these loads on the wall may be calculated using Figure 5.5.2B from AASHTO.

Surcharge due to strip loads on the soil being retained shall be included as a dead load surcharge load. The following procedure as described in Principles of Foundation Engineering by Braja M. Das (1995) shall be applied to calculate these loads when strip loads are applicable. An example of this application is when a retaining wall is used in front of an abutment so that the wall is retaining the soil from behind the abutment as a strip load on the soil being retained by the wall.

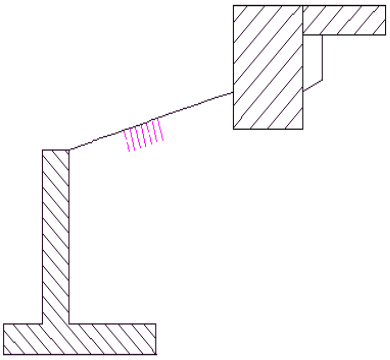

RETAINING WALL IN FRONT OF AN ABUTMENT

The portion of soil that is in the active wedge must be determined because the surcharge pressure only affects the wall if it acts on the active wedge. The actual failure surface in the backfill for the active state can be represented by ABC shown in the figure below. An approximation to the failure surface based on Rankine's active state is shown by dashed line AD. This approximation is slightly unconservative because it neglects friction at the pseudo-wall to soil interface.

The following variables are shown in the figure below:

β = slope of the active failure plane in degrees
δ = slope of fill in degrees
H = height of the pseudo-wall (fom the bottom of the footing).
L_1 = distance from back of stem to back of footing heel
L_2 = distance from footing heel to intersection of failure plane with ground surface

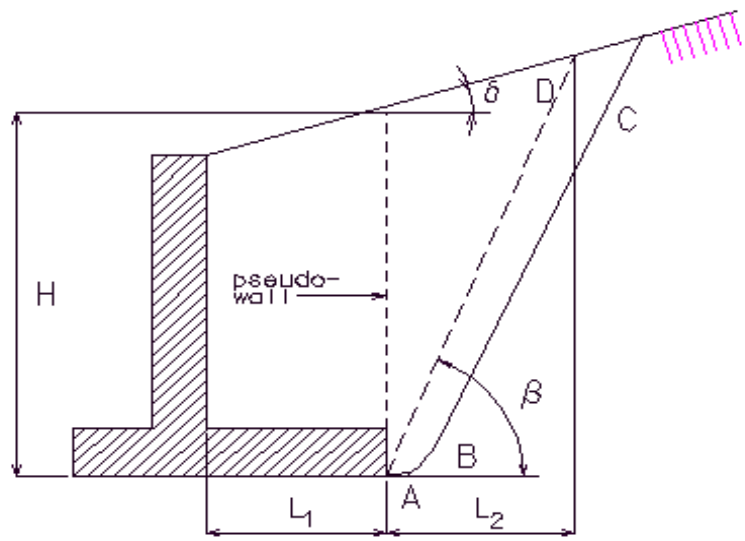

DETERMINATION OF ACTIVE WEDGES

In order to determine β the following equation which has been derived from Rankine's active earth pressure theory must be solved by iteration:

$$\tan(-\beta)+\frac{1}{\tan(\beta-\phi)}-\frac{1}{\tan(\beta-\delta)}+\frac{1}{\tan(90°+\phi+\delta-\beta)}=0$$

ϕ = angle of internal friction of soil in degrees

A good estimate for the first iteration is to let $\beta = 45° + (\phi/2)$. In lieu of iterating the above equation a conservative estimate for β is 45 degrees. Once β has been established, an estimate of L_1 is needed to determine L_2. From the geometry of the variables shown in the above figure:

$$L_2 = H\frac{\cos\delta\cos\beta}{\sin(\beta-\delta)}$$

The resultant pressure due to the strip load surcharge and its location are then determined. The following variables are shown in the figure below:

q = load per unit area

P_s = resultant pressure on wall due only to surcharge earth pressure

$\bar{z}$ = location of P_s measured from the bottom of the footing

L_3 = distance from back of stem to where surcharge pressure begins

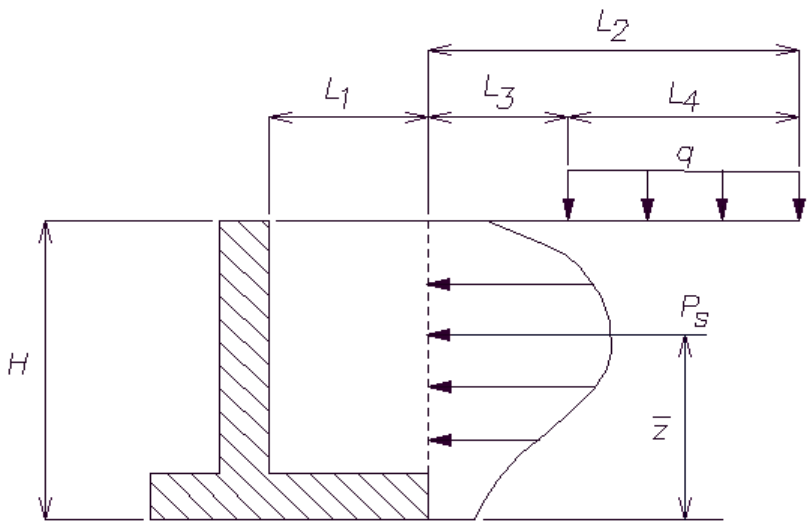

SURCHARGE PRESSURE ON RETAINING WALL

From the figure:

$$P_s = \frac{q}{90}\left[H\left(\theta_2 - \theta_1\right)\right] \text{ where}$$

$$\theta_1 = \arctan\left[\frac{L_3}{H}\right] \text{ and } \theta_2 = \arctan\left[\frac{L_2}{H}\right]$$

$$\bar{z} = \frac{H^2\left(\theta_2 - \theta_1\right) - \left(R - Q\right) + 57.30 L_4 H}{2H\left(\theta_2 - \theta_1\right)} \quad \text{where}$$

$$R = \left(L_2\right)^2\left(90° - \theta_2\right) \text{ and } Q = \left(L_3\right)^2\left(90° - \theta_1\right)$$

When applicable, P_S is applied to the wall in addition to other earth pressures. The wall is then designed as usual.

Live Load Surcharge

AASHTO 3.20.3 & 5.5.2

Live load surcharge pressure of not less than two feet of earth shall be applied to the structure when highway traffic can come within a horizontal distance equal to one-half of the wall height, measured from the plane where earth pressure is applied.

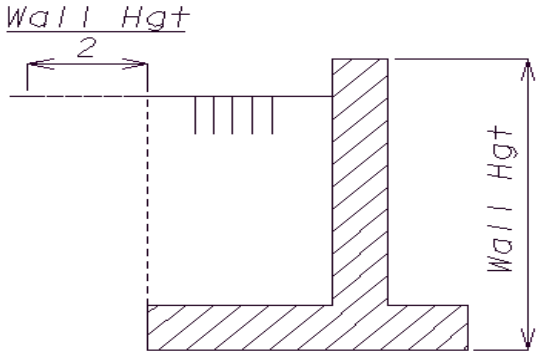

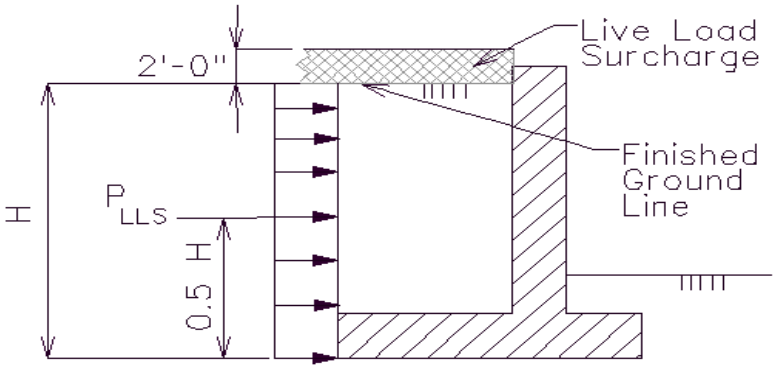

LIVE LOAD SURCHARGE

P_{LLS} = (2 ft) γ_s C_a H

P_{LLS} = pressure due to live load surcharge only

γ_s = unit weight of soil (Note: AASHTO 5.5.2 specifies a minimum of 125 pcf for live load surcharge, MoDOT policy allows 120 pcf as given from the Weight of Materials Table of the Loads Section in the Bridge Manual.)

C_a = coefficient of active earth pressure

H = height of the soil face at the vertical plane of interest

The vertical live load surcharge pressure should only be considered when checking footing bearing pressures, when designing footing reinforcement, and when collision loads are present.

Live Load Wheel Lines

Live load wheel lines shall be applied to the footing when the footing is used as a riding or parking surface.

AASHTO 3.24.5.1.1 & 5.5.6.1

Distribute a LL_{WL} equal to 16 kips as a strip load on the footing in the following manner.

$$P = \frac{LL_{WL}}{E}$$

where E = 0.8X+3.75

X = distance in feet from the load to the front face of the wall

AASHTO 3.24.2 & 3.30

The wheel lines shall move 1 foot from the barrier curb or wall to 1 foot from the toe of the footing.

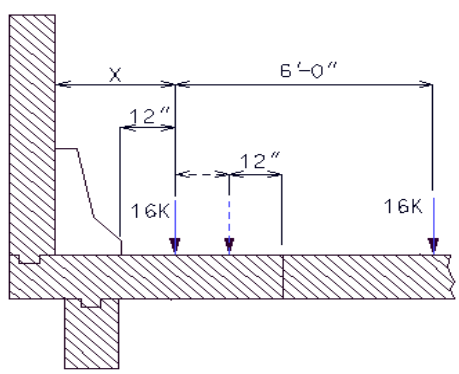

Collision Forces

AASHTO Figure 2.7.4B

Collision forces shall be applied to a wall that can be hit by traffic. Apply a point load of 10 kips to the wall at a point 3 ft above the finished ground line.

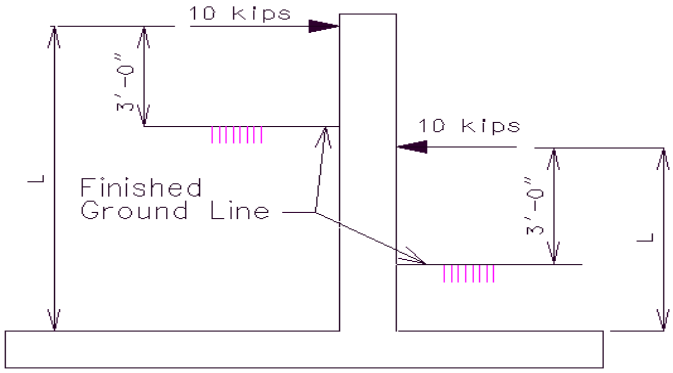

SECTION

Distribute the force to the wall in the following manner:

Force per ft of wall = $\frac{10 \ \ kips}{2L}$

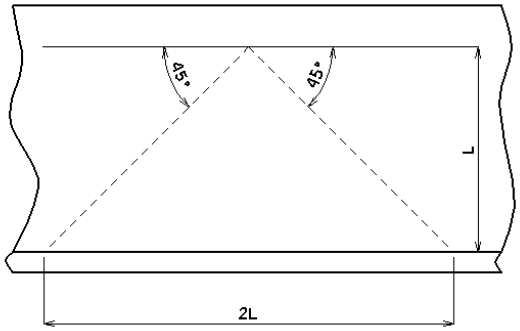

PROFILE

When considering collision loads, a 25% overstress is allowed for bearing pressures and a factor of safety of 1.2 shall be used for sliding and overturning.

Wind and Temperature Forces

These forces shall be disregarded except for special cases, consult the Structural Project Manager.

When walls are greater than 84 feet long, an expansion joint shall be provided. Contraction joint spacing shall not exceed 28 feet.

Seismic Loads

Retaining walls in Seismic Performance Category A (SPC A) and SPC B which are located adjacent to roadways may be designed in accordance with AASHTO specifications for SPC A. Retaining walls in SPC B which are located under a bridge abutment or in a location where failure of the wall may affect the structural integrity of a bridge shall be designed to AASHTO specifications for SPC B. All

retaining walls located in SPC C and SPC D shall be designed in accordance to AASHTO specifications for the corresponding SPC.

In seismic category B, C and D determine equivalent fluid pressure from Mononobe-Okabe static method.

P_{AE} = equivalent active earth pressure during an earthquake

1992 AASHTO Div. IA Eqn. C6-3

$$P_{AE} = \frac{1}{2}\gamma_s H^2 (1 - k_v) K_{AE}$$ where

K_{AE} = seismic active pressure coefficient

1992 AASHTO Div. IA Eqn. C6-4

$$K_{AE} = \frac{\cos^2(\phi - \theta - \beta)}{\cos\theta \cos^2\beta \cos(\delta + \beta + \theta)\left\{1 + \sqrt{\frac{\sin(\phi + \delta)\sin(\phi - \theta - i)}{\cos(\delta + \beta + \theta)\cos(i - \beta)}}\right\}^2}$$

γ_s = unit weight of soil

AASHTO 5.2.2.3 & Div. IA 6.4.3

k_v = vertical acceleration coefficient

k_h = horizontal acceleration coefficient which is equal to 0.5A for all walls, but 1.5A for walls with battered piles where
A = seismic acceleration coefficient

The following variables are shown in the figure below:
ϕ = angle of internal friction of soil

$\theta = \arctan\left(\frac{k_h}{1 - k_v}\right)$

β = slope of soil face
δ = angle of friction between soil and wall in degrees
i = backfill slope angle in degrees
H = distance from the bottom of the part of the wall to which the pressure is applied to the top of the fill at the location where the earth pressure is to be found.

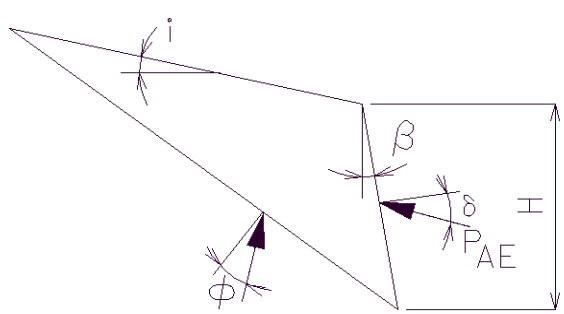

ACTIVE SOIL WEDGE

Group Loads

For SPC A and B (if wall does not support an abutment), apply AASHTO Group I Loads only. Bearing capacity, stability and sliding shall be calculated using working stress loads. Reinforced concrete design shall be calculated using load factor design loads.

AASHTO Table 3.22.1A

AASHTO Group I Load Factors for Load Factor Design of concrete:

γ = 1.3

β_D = 1.0 for concrete weight

β_D = 1.0 for flexural member

β_E = 1.3 for lateral earth pressure for retaining walls

β_E = 1.0 for vertical earth pressure

β_{LL} = 1.67 for live load wheel lines

β_{LL} = 1.67 for collision forces

AASHTO 5.14.2

β_E = 1.67 for vertical earth pressure resulting from live load surcharge

β_E = 1.3 for horizontal earth pressure resulting from live load surcharge

For SPC B (if wall supports an abutment), C, and D apply AASHTO Group I Loads and seismic loads in accordance with AASHTO Division IA - Seismic Design Specifications.

AASHTO Div. IA 4.7.3

When seismic loads are considered, load factor for all loads = 1.0.

3.62.2 Mechanically Stabilized Earth (MSE) Walls

2.1 Design

Designs of Mechanically Stabilized Earth (MSE) walls are completed by consultants or contractors in accordance with Section 5 of the AASHTO Specifications. MoDOT Internet site contains a listing of facing unit manufacturers, soil reinforcement suppliers, and wall system suppliers which have been approved for use. See Special Provisions for additional information.

General policy

- Small block walls are limited to a 10 foot height in one lift.
- For small block walls, top cap units shall be used and shall be permanently attached by means of a resin anchor system.
- For large block walls, capstone may be substituted for coping if specified on the design layout.
- MSE walls shall not be used where exposure to acid water may occur such as in areas of coal mining.
- MSE walls shall not be used where scour is a problem.
- MSE walls with metallic soil reinforcement shall not be used where stray electrical ground currents may occur as would be present near electrical substations.
- No utilities shall be allowed in the reinforced earth with the exception of storm water drainage.
- The interior angle between two walls must be greater than 70 degrees.
- Walls greater than 10 feet shall have a maximum batter of 1.5 inches per foot.
- The friction angle used for the computation of horizontal forces within the reinforced soil shall be greater than or equal to 34 degrees.
- All reinforcement shall be epoxy coated in the concrete face for walls subject to spraying from adjacent roadways (approximately 10 feet or less from the curb.)
- All concrete except facing panels or units shall be CLASS B or B-1.
- The friction angle of the soil to be retained by the reinforced earth shall be listed on the plans as well as the friction angle for the foundation material the wall is to rest on.
- Seismic performance category and acceleration coefficient shall be listed on the plans.
- Factors of Safety for MSE walls shall be 2.0 for overturning, 1.5 for sliding, 2.0 for ultimate bearing capacity and 1.5 for pullout resistance.
- Factors of Safety for seismic design shall be 1.5 for overturning and 1.1 for sliding.
- Do not use small block walls in the following locations:

  Within the splash zone from snow removal operations (assumed to be 15 feet from the edge of the shoulder).

  Where the blocks will be continuously wetted, such as around sources of water.

Where blocks will be located behind barrier curbs or other obstacles which will trap salt-laden snow from removal operations.

For structurally critical applications, such as containing necessary fill around structures.

In tiered wall systems.

- For locations where small block walls are not desirable, consider coloring agents and/or architectural forms using large block walls for aesthetic installations.

MSE Wall Plan and Geometrics

- A plan view shall be drawn showing a baseline or centerline, roadway stations and wall offsets. The plan shall contain enough information to properly locate the wall. The ultimate right of way shall also be shown, unless it is of a significant distance from the wall and will have no bearing on the wall design or construction.
- Stations and offsets are established between one construction baseline or roadway centerline and a wall control line (baseline). Some wall designs contain a slight batter, while others are vertical. A wall control line is set at the front face of the wall, either along the top or at the base of the wall, whichever is critical to the proposed improvements. For battered walls, to allow for batter adjustments of the stepped level pad or variation of the top of the wall, the wall control line (baseline) is to be shown at a fixed elevation. For battered walls, the offset location and elevation of control line shall be indicated. All horizontal breaks in the wall are given station-offset points, and walls with curvature indicate station-offsets to the PC and PT of the wall, and the radius.
- Any obstacles which may possibly interfere with wall reinforcing strips are shown. Drainage structures, lighting, or truss pedestals and footings, etc. are to be shown, with station offset to centerline of the obstacle, with obstacle size. Skew angles are shown to indicate the angle between a wall and a pipe or box which runs through the wall.
- Elevations at the top and bottom of the wall shall be shown at 25 foot intervals and at any break points in the wall.
- Curve data and/or offsets shall be shown at all changes in horizontal alignment. If battered wall systems are used on curved structures, show offsets at 10 foot (max.) intervals from the baseline.
- Details of salt proofing if under roadway.
- Details of any architectural finishes.
- Details of threaded rod connecting the top cap block.
- Estimated quantities, total sq. ft. of mechanically stabilized earth systems.

MSE Wall Cross Sections

- A typical wall section for general information is shown.
- Additional sections are drawn for any special criteria. The front face of the wall is drawn vertical, regardless of the wall type.
- Any fencing and barrier curb are shown.
- Barriers if needed are shown on the cross section. Concrete barriers are attached to the roadway or shoulder pavement, not to the MSE wall. Standard Type B barrier curbs are placed along wall faces when traffic has access to the front face of the wall over shoulders of paved areas.

2.2 DETAILS

MSE Walls

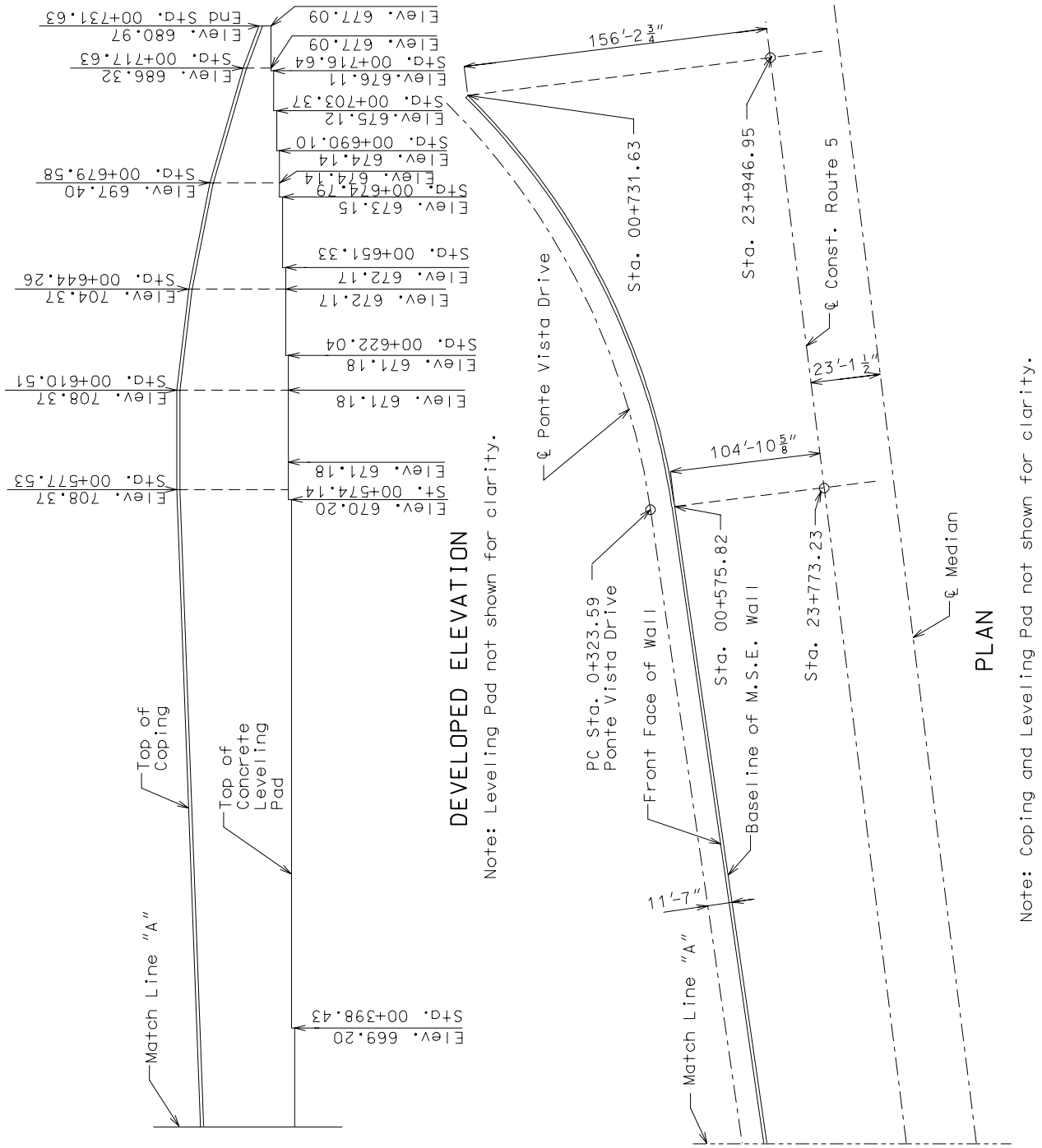

MSE Walls

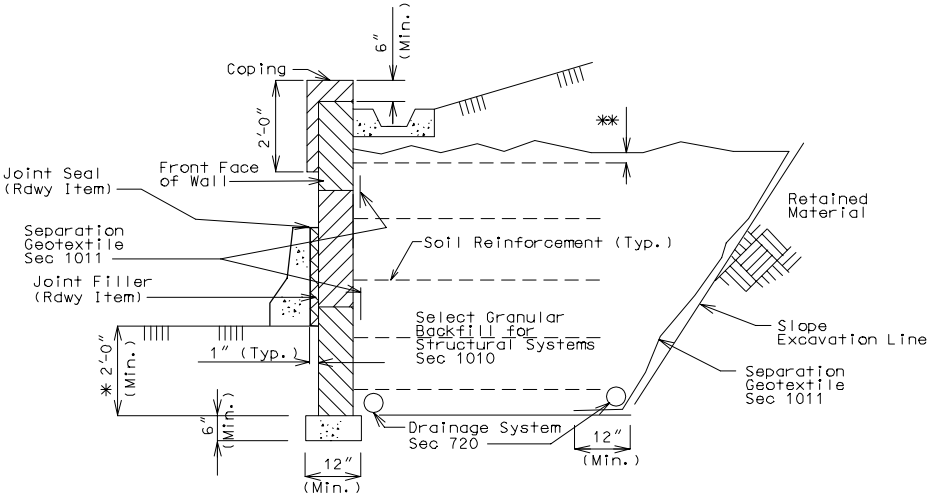

* For minimum embedment see AASHTO 5.8.1.

** Topmost layer of reinforcement shall be fully covered with select granular backfill for structural systems, as approved by the wall manufacturer, before placement of the Separation Geotextile.

TYPICAL SECTION THRU LARGE PANEL WALL

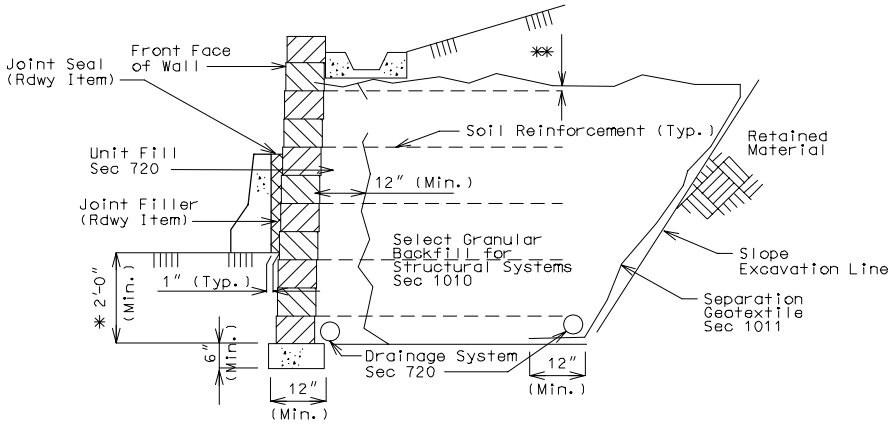

* For minimum embedment see AASHTO 5.8.1.

** Topmost layer of reinforcement shall be fully covered with select granular backfill for structural systems, as approved by the wall manufacturer, before placement of the Separation Geotextile.

TYPICAL SECTION THRU SMALL BLOCK WALL

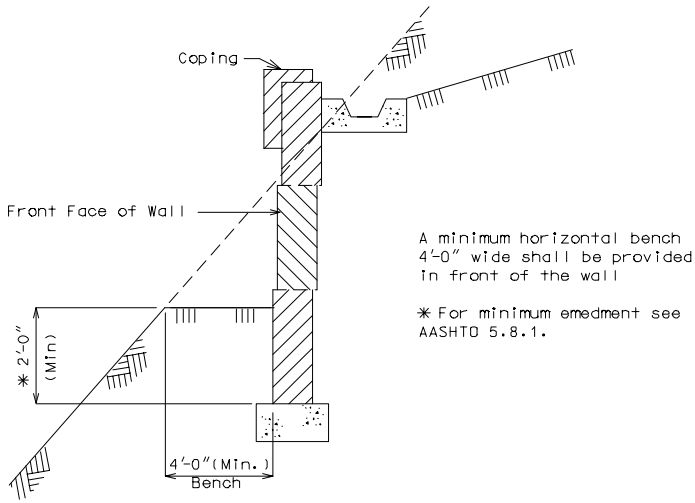

TYPICAL SECTION THRU WALL

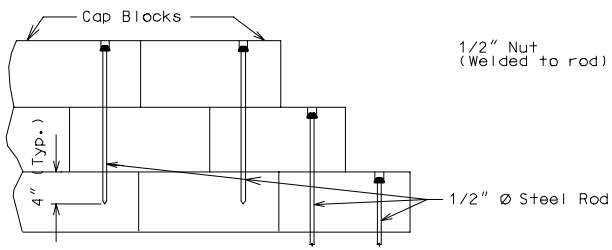

WALL PROFILE

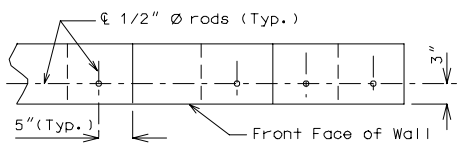

WALL PLAN

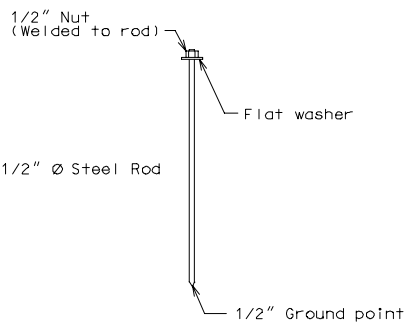

DETAILS OF 1/2" THREADED ROD OR REINFORCING ROD

Note:

Holes are 5/8" round, extend 4" into the third layer of blocks, recessed 2" deep by 1-1/2" round.

Rods or reinforcing bars are secured by an approved resin anchor system in accordance with Sec 1039.

Recess hole to be backfilled with non-shrink cement grout.

CAPSTONE ANCHOR DETAILS

BATTERED WALLS

Battered mechanically stabilized earth wall systems may be used unless the design layout specifically calls for a vertical wall (large panel walls shall not be battered). If a battered MSE wall system is allowed, then the following note should be placed on the design plans:

"The top and bottom of wall elevations are given for a vertical wall. If a battered wall system is used, the height of the wall shall be adjusted as necessary to fit the ground slope. If fence is built on an extended gutter, then the height of the wall shall be adjusted further."

For battered walls, note on the plans whether the horizontal offset from the baseline is fixed at the top or bottom of the wall. Horizontal offset and corresponding vertical elevation shall be noted on plans.

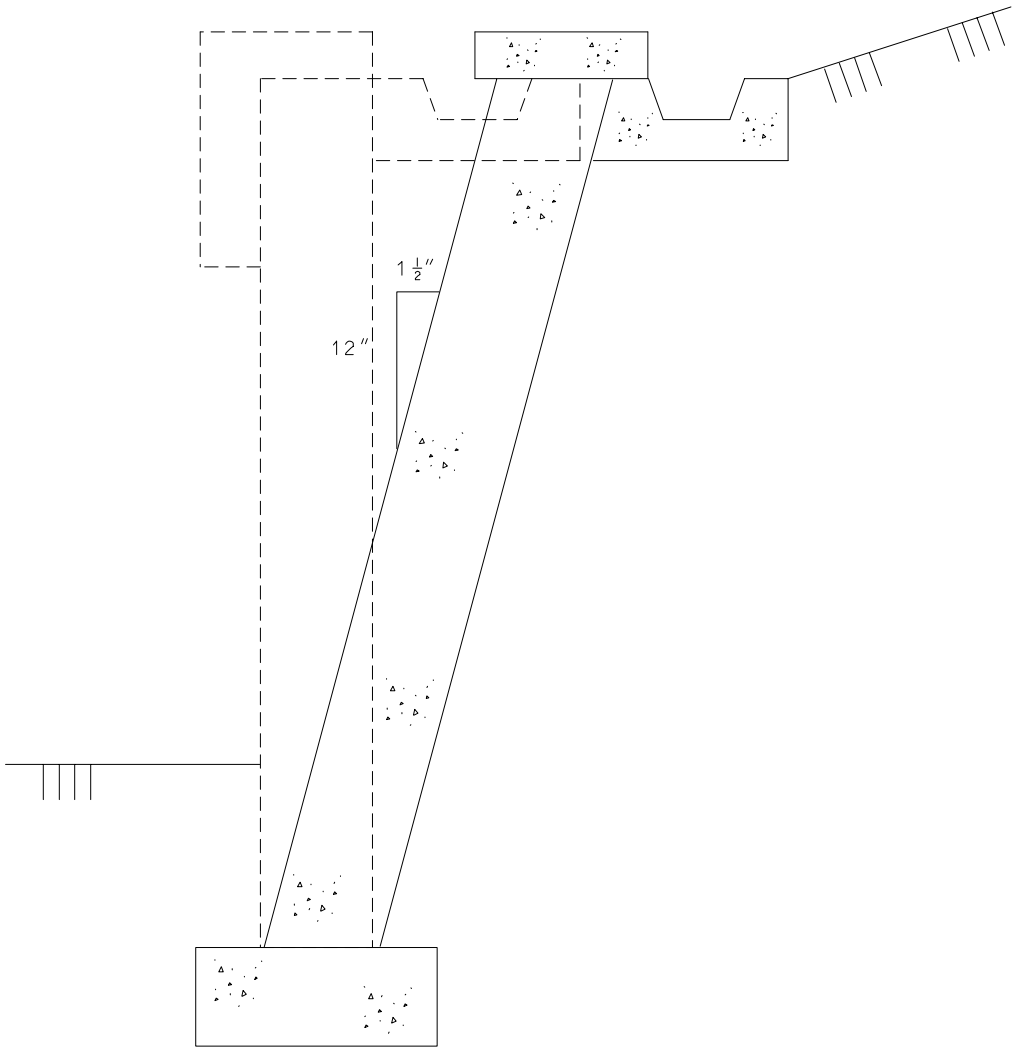

TYPICAL SECTION THRU WALL

FENCING

MSE Walls

Fencing may be installed directly on top of the wall, on the gutter, or behind the wall. Fencing installed on a reinforced modified Type A or B gutter or behind the wall can be done as shown.

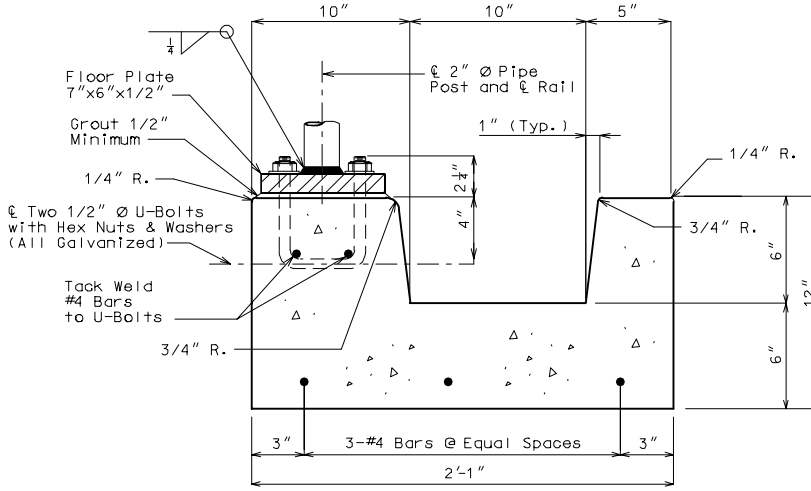

RAIL POST CONNECTION TO EXTEND GUTTER

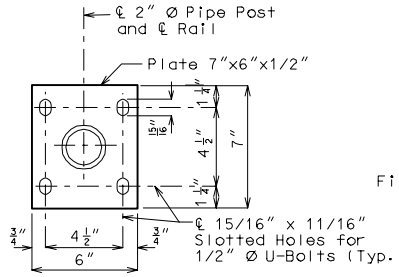

PLAN OF FLOOR PLATE

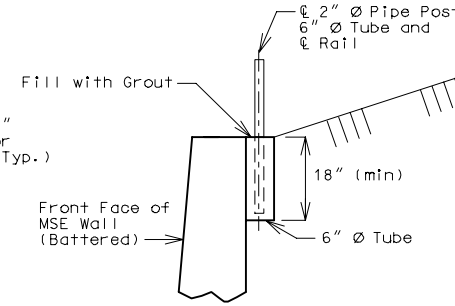

RAIL POST CONNECTION BEHIND WALL (WITHOUT GUTTER)

3.62.3 Cast-In-Place Concrete Retaining Walls

3.1 Unit Stresses

Concrete

Concrete for retaining walls shall be Class B Concrete (f'c = 3000 psi) unless the footing is used as a riding surface in which case Class B-1 Concrete (f'c = 4000 psi) shall be used.

Reinforcing Steel

Reinforcing Steel shall be Grade 60 (fy = 60,000 psi).

Pile Footing

For piling capacities, see the Unit Stresses and Piling Sections of the Bridge Manual.

Spread Footing

For foundation material capacity, see the Unit Stresses Section of the Bridge Manual and the Design Layout Sheet.

3.2 Design

If the height of the wall or fill is a variable dimension, then base the structural design of the wall, toe, and heel on the high quarter point between expansion joints.

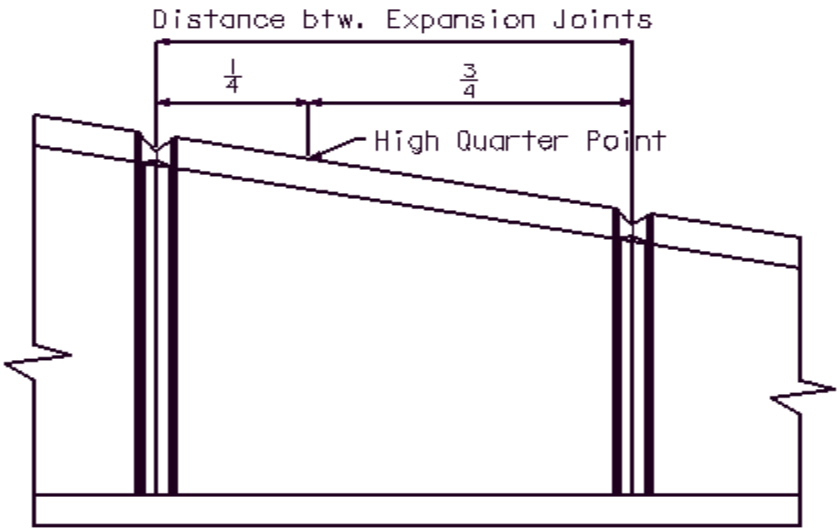

Spread Footings

Location of Resultant

AASHTO 5.5.5

The resultant of the footing pressure must be within the section of the footing specified in the following table.

When Retaining Wall is Built on:	AASHTO Group Loads I-VI	For Seismic Loads
Soil [a]	Middle 1/3	Middle 1/2 [b]
Rock [c]	Middle 1/2	Middle 2/3

a. Soil is defined as clay, clay and boulders, cemented gravel, soft shale, etc. with allowable bearing values less than 6 tons/sq. ft.
b. MoDOT is more conservative than AASHTO in this requirement.
c. Rock is defined as rock or hard shale with allowable bearing values of 6 tons/sq. ft. or more.

Note:
The location of the resultant is not critical when considering collision loads.

Factor of Safety Against Overturning

AASHTO 5.5.5

AASHTO Group Loads I - VI:
- F.S. for overturning ≥ 2.0 for footings on soil.
- F.S. for overturning ≥ 1.5 for footings on rock.

For seismic loading, F.S. for overturning may be reduced to 75% of the value for AASHTO Group Loads I - VI. For seismic loading:
- F.S. for overturning ≥ (0.75)(2.0) = 1.5 for footings on soil.
- F.S. for overturning ≥ (0.75)(1.5) = 1.125 for footings on rock.

For collision forces:
- F.S. for overturning ≥ 1.2.

Factor of Safety Against Sliding

AASHTO 5.5.5

Only spread footings on soil need be checked for sliding because spread footings on rock or shale are embedded into the rock.
- F.S. for sliding ≥ 1.5 for AASHTO Group Loads I - VI.
- F.S. for sliding ≥ (0.75)(1.5) = 1.125 for seismic loads.
- F.S. for sliding ≥ 1.2 for collision forces.

The resistance to sliding may be increased by:
- adding a shear key that projects into the soil below the footing.
- widening the footing to increase the weight and therefore increase the frictional resistance to sliding.

Passive Resistance of Soil to Lateral Load

The Rankine formula for passive pressure can be used to determine the passive resistance of soil to the lateral force on the wall. This passive pressure is developed at shear keys in retaining walls and at end abutments.

AASHTO Figure 5.5.5A

The passive pressure against the front face of the wall and the footing of a retaining wall is loosely compacted and should be neglected when considering sliding.

Rankine formula: $P_P = \frac{1}{2} C_P \gamma_S \left[H^2 - H_1^2 \right]$ where the following variables are defined in the figure below:

$$C_P = \tan^2\left(45^o + \frac{\phi}{2}\right)$$

$$y_1 = \frac{H_1 y_2^2 + \frac{2}{3} y_2^3}{H^2 - H_1^2}$$

P_P = passive force at shear key in pounds per foot of wall length

C_P = coefficient of passive earth pressure

γ_S = unit weight of soil

H = height of front face fill less 1 foot min. for erosion

H_1 = H minus depth of shear key

y_1 = location of P_P from bottom of footing

ϕ = angle of internal friction of soil

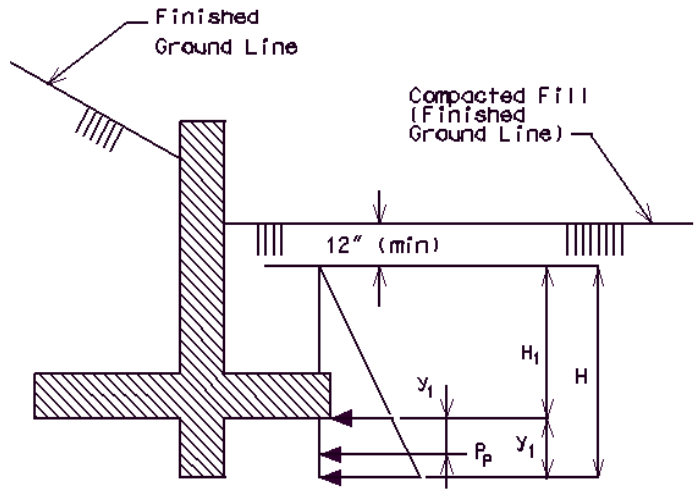

AASHTO 5.5.2

The resistance due to passive pressure in front of the shear key shall be neglected unless the key extends below the depth of frost penetration.

MoDOT Materials Division

Frost line is set at 36 inches at the north border of Missouri and at 18" at the south border.

Passive Pressure During Seismic Loading

During an earthquake, the passive resistance of soil to lateral loads is slightly decreased. The Mononobe-Okabe static method is used to determine the equivalent fluid pressure.

P_{PE} = equivalent passive earth pressure during an earthquake

1992 AASHTO Div.IA Eqn. C6-5

$$P_{PE} = \frac{1}{2}\gamma_S H^2 (1 - k_V) K_{PE}$$ where:

1992 AASHTO Div.1A Eqn. C6-6

K_{PE} = seismic passive pressure coefficient

$$K_{PE} = \frac{\cos^2(\phi - \theta + \beta)}{\cos\theta \cos^2\beta \cos(\delta - \beta + \theta)\left\{1 - \sqrt{\frac{\sin(\phi + \delta)\sin(\phi - \theta + i)}{\cos(\delta - \beta + \theta)\cos(i - \beta)}}\right\}^2}$$

γ_S = unit weight of soil

H = height of soil at the location where the earth pressure is to be found

k_V = vertical acceleration coefficient

ϕ = angle of internal friction of soil

θ = $\arctan\left[\frac{k_h}{1 - k_V}\right]$

k_H = horizontal acceleration coefficient

β = slope of soil face in degrees

i = backfill slope angle in degrees
δ = angle of friction between soil and wall

Special Soil Conditions
Due to creep, some soft clay soils have no passive resistance under a continuing load. Removal of undesirable material and replacement with suitable material such as sand or crushed stone is necessary in such cases. Generally, this condition is indicated by a void ratio above 0.9, an angle of internal friction (ϕ) less than 22°, or a soil shear less than 0.8 ksf. Soil shear is determined from a standard penetration test.

$$\text{Soil Shear}\left(\frac{k}{ft^2}\right)=\frac{blows \quad per \quad 12 \ in}{10}$$

Friction
In the absence of tests, the total shearing resistance to lateral loads between the footing and a soil that derives most of its strength from internal friction may be taken as the normal force times a coefficient of friction. If the plane at which frictional resistance is evaluated is not below the frost line then this resistance must be neglected.

When A Shear Key Is Not Used

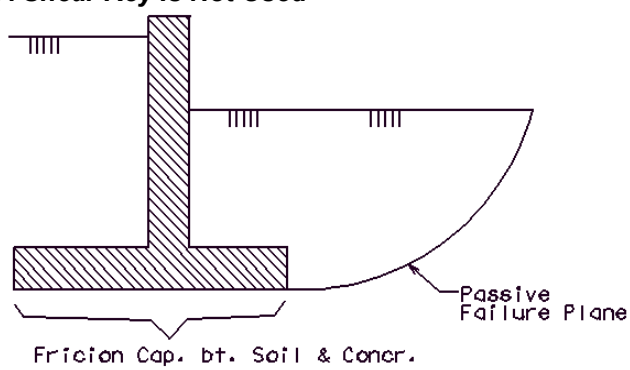

Sliding is resisted by the friction force developed at the interface between the soil and the concrete footing along the failure plane. The coefficient of friction for soil against concrete can be taken from the table below. If soil data is not readily available or is inconsistent, the friction factor (f) can be taken as $f = \tan\left(\frac{2}{3}\phi\right)$ where ϕ is the angle of internal friction of the soil (Civil Engineering Reference Manual by Michael R. Lindeburg, 6th ed., 1992).

AASHTO Table 5.5.2B

Coefficient of Friction Values for Soil Against Concrete	
Soil Type [a]	**Coefficient of Friction**
coarse-grained soil without silt	0.55
coarse-grained soil with silt	0.45
Silt (only)	0.35
clay	0.30 [b]

a. It is not necessary to check rock or shale for sliding due to embedment.
b. Caution should be used with soils with $\phi < 22^{o}$ or soil shear < 0.8 k/sq.ft. (soft clay soils). Removal and replacement of such soil with suitable material should be considered.

When A Shear Key Is Used

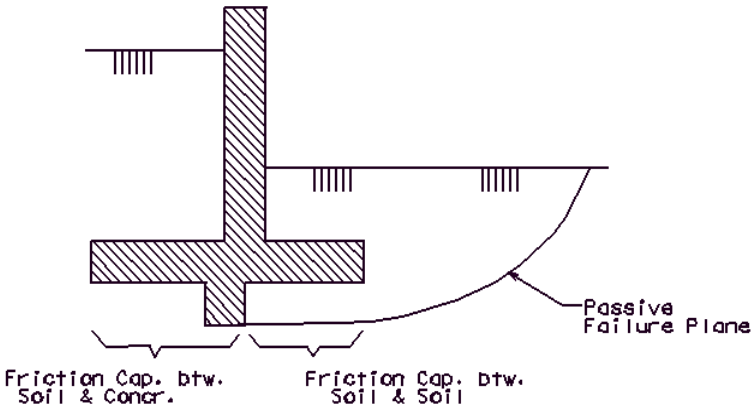

When a shear key is used, the failure plane is located at the bottom of the shear key in the front half of the footing. The friction force resisting sliding in front of the shear key is provided at the interface between the stationary layer of soil and the moving layer of soil, thus the friction angle is the internal angle of friction of the soil (soil against soil). The friction force resisting sliding on the rest of the footing is of that between the concrete and soil. Theoretically the bearing pressure distribution should be used to determine how much normal load exists on each surface, however it is reasonable to assume a constant distribution. Thus the normal load to each surface can be divided out between the two surfaces based on the fractional length of each and the total frictional force will be the sum of the normal load on each surface multiplied by the corresponding friction factor.

Bearing Pressure

Group Loads I - VI

AASHTO 4.4.7.1.2 & 4.4.8.1.3

The bearing capacity failure factor of safety for Group Loads I - VI must be greater than or equal to 3.0. This factor of safety is figured into the allowable bearing pressure given on the "Design Layout Sheet".

The bearing pressure on the supporting soil shall not be greater than the allowable bearing pressure given on the "Design Layout Sheet".

Seismic Loads

AASHTO Div. IA 6.3.1(B)

When seismic loads are considered, AASHTO allows the ultimate bearing capacity to be used. The ultimate capacity of the foundation soil can be conservatively estimated as 2.0 times the allowable bearing pressure given on the "Design Layout".

Stem Design

AASHTO 5.5.6.2

The vertical stem (the wall portion) of a cantilever retaining wall shall be designed as a cantilever supported at the base.

Footing Design

AASHTO 5.5.6.1

Toe

The toe of the base slab of a cantilever wall shall be designed as a cantilever supported by the wall. The critical section for bending moments shall be taken at the front face of the stem. The critical section for shear shall be taken at a distance d (d = effective depth) from the front face of the stem.

Heel

The rear projection (heel) of the base slab shall be designed to support the entire weight of the superimposed materials, unless a more exact method is used. The heel shall be designed as a cantilever supported by the wall. The critical section for bending moments and shear shall be taken at the back face of the stem.

Shear Key Design

The shear key shall be designed as a cantilever supported at the bottom of the footing.

Pile Footings

Footings shall be cast on piles when specified on the "Design Layout Sheet". If the horizontal force against the retaining wall cannot otherwise be resisted, some of the piles shall be driven on a batter.

Pile Arrangement

For retaining walls subject to moderate horizontal loads (walls 15 to 20 feet high), the following layout is suggested.

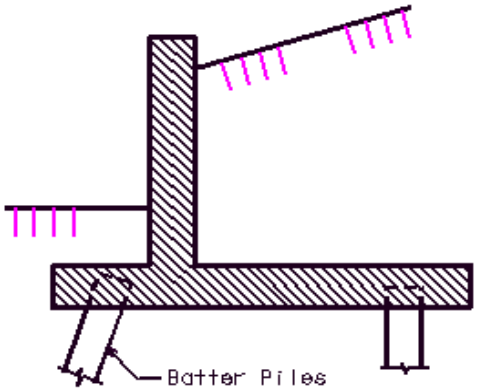

SECTION

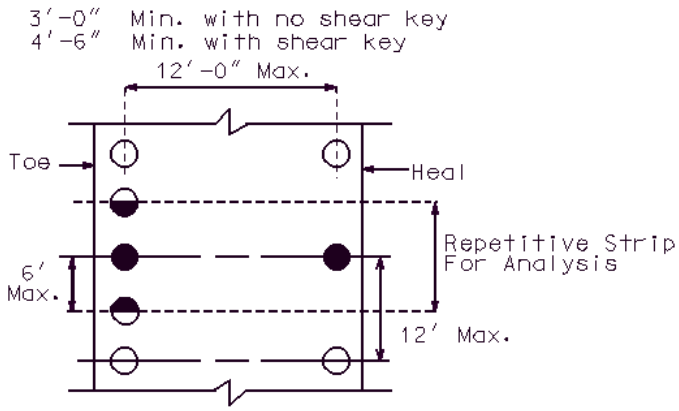

PLAN

For higher walls and more extreme conditions of loading, it may be necessary to:

- use the same number of piles along all rows
- use three rows of piles
- provide batter piles in more than one row

Loading Combinations for Stability and Bearing

The following table gives the loading combinations to be checked for stability and pile loads. These abbreviations are used in the table:

DL = dead load weight of the wall elements
SUR = two feet of live load surcharge
E = earth weight
EP = equivalent fluid earth pressure
COL = collision force
EQ = earthquake inertial force of failure wedge

				Sliding Factor of Safety	
Loading Case	**Vertical Loads**	**Horizontal Loads**	**Overturning Factor of Safety**	**Battered Toe Piles**	**Vertical Toe Piles**
I [a]	DL+SUR+E	EP+SUR	1.5	1.5	2.0
II	DL+SUR+E	EP+SUR+COL	1.2	1.2	1.2
III	DL+E	EP	1.5	1.5	2.0
IV [b]	DL+E	None	-----	-----	-----
V [c]	DL+E	EP+EQ	1.125	1.125	1.5

a. Load Case I should be checked with and without the vertical surcharge.

b. A 25% overstress is allowed on the heel pile in Load Case IV.

c. The factors of safety for earthquake loading are 75% of that used in Load Case III. Battered piles are not recommended for use in seismic performance categories B, C, and D. Seismic design of retaining walls is not required in SPC A and B. Retaining walls in SPC B located under a bridge abutment shall be designed to AASHTO Specifications for SPC B.

Pile Properties and Capacities

For Load Cases I-IV in the table above, the allowable compressive pile force may be taken from the pile capacity table in the Piling Section of the Bridge Manual which is based in part on AASHTO 4.5.7.3. Alternatively, the allowable compressive pile capacity of a friction pile may be determined from the ultimate frictional and bearing capacity between the soil and pile divided by a safety factor of 3.5 (AASHTO Table 4.5.6.2.A). The maximum amount of tension allowed on a heel pile is 3 tons.

For Load Case V in the table above, the allowable compressive pile force may be taken from the pile capacity table in the Piling Section of the Bridge Manual multiplied by the appropriate factor (2.0 for steel bearing piles, 1.5 for friction piles). Alternatively, the allowable compressive pile capacity of a friction pile may be determined from the ultimate frictional and bearing capacity between the soil and pile divided by a safety factor of 2.0. The allowable tension force on a bearing or friction pile will be equal to the ultimate friction capacity between the soil and pile divided by a safety factor of 2.0.

To calculate the ultimate compressive or tensile capacity between the soil and pile requires the boring data which includes the SPT blow counts, the friction angle, the water level, and the soil layer descriptions.

Assume the vertical load carried by battered piles is the same as it would be if the pile were vertical. The properties of piles may be found in the Piling Section of the Bridge Manual.

Neutral Axis of Pile Group

Locate the neutral axis of the pile group in the repetitive strip from the toe of the footing at the bottom of the footing.

Moment of Inertia of Pile Group

The moment of inertia of the pile group in the repetitive strip about the neutral axis of the section may be determined using the parallel axis theorem:

$$I = \sum(I_A) + \sum(Ad^2) \quad where:$$

I_A = moment of inertia of a pile about its neutral axis

A = area of a pile

d = distance from a pile's neutral axis to pile group's neutral axis

I_A may be neglected so the equation reduces to:

$$I = \sum(Ad^2)$$

Resistance To Sliding

Any frictional resistance to sliding shall be ignored, such as would occur between the bottom of the footing and the soil on a spread footing.

Friction or Bearing Piles With Batter (Case 1)

Retaining walls using friction or bearing piles with batter should develop lateral strength (resistance to sliding) first from the batter component of the pile and second from the passive pressure against the shear key and the piles.

Friction or Bearing Piles Without Batter (Case 2)

Retaining walls using friction or bearing piles without batter due to site constrictions should develop lateral strength first from the passive pressure against the shear key and second from the passive pressure against the pile below the bottom of footing. In this case, the shear key shall be placed at the front face of the footing.

Concrete Pedestal Piles or Drilled Shafts (Case 3)

Retaining walls using concrete pedestal piles should develop lateral strength first from passive pressure against the shear key and second from passive pressure against the pile below the bottom of the footing. In this case, the shear key shall be placed at the front of the footing. Do not batter concrete pedestal piles.

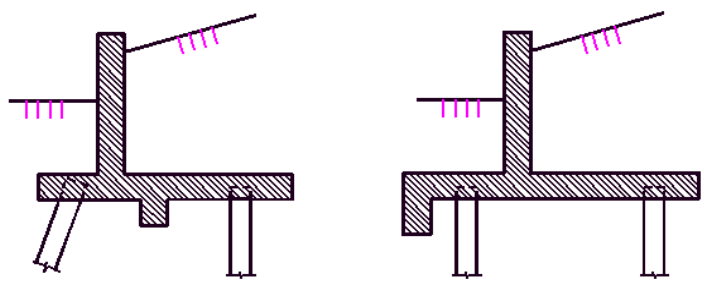

CASE 1 **CASE 2 & 3**

Resistance Due to Passive Pressure Against Pile

The procedure below may be used to determine the passive pressure resistance developed in the soil against the piles. The procedure assumes that the piles develop a local failure plane.

F = the lateral force due to passive pressure on pile

$$F = \frac{1}{2}\gamma_s C_P H^2 B \quad where: \quad C_p = \tan^2\left[45 + \frac{\phi}{2}\right]$$

γ_s = unit weight of soil

H = depth of pile considered for lateral resistance (H_{max}= 6B)

C_P = coefficient of active earth pressure

B = width of pile

ϕ = angle of internal friction of soil

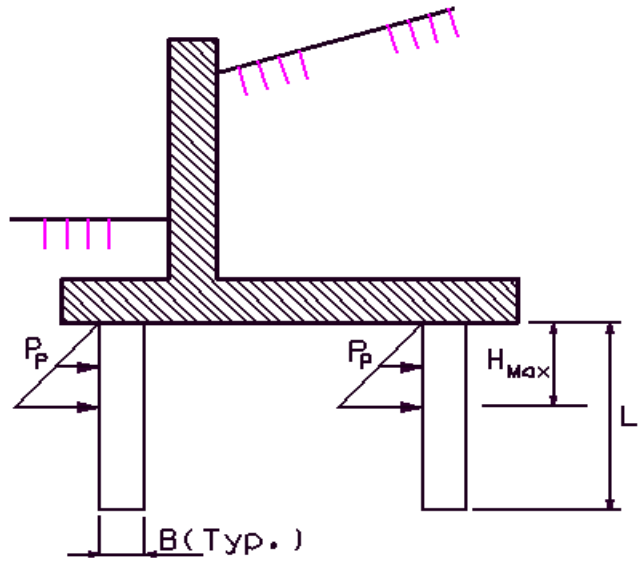

Resistance Due to Pile Batter

Use the horizontal component (due to pile batter) of the allowable pile load as the lateral resistance of the battered pile. (This presupposes that sufficient lateral movement of the wall can take place before failure to develop the ultimate strength of both elements.)

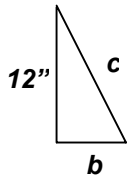

b = the amount of batter per 12 inches.

$$c = \sqrt{(12\ in)^2 + (b)^2}$$

$P_{HBatter}$ = $P_T\left(\frac{b}{c}\right)$(# of battered piles) where:

$P_{HBatter}$ = the horizontal force due to the battered piles

P_T = the allowable pile load

Maximum batter is 4" per 12".

Resistance Due to Shear Keys

A shear key may be needed if the passive pressure against the piles and the horizontal force due to batter is not sufficient to attain the factor of safety against sliding. The passive pressure against the shear key on a pile footing is found in the same manner as for spread footings.

Resistance to Overturning

The resisting and overturning moments shall be computed at the centerline of the toe pile at a distance of 6B (where B is the width of the pile) below the bottom of the footing. A maximum of 3 tons of tension on each heel pile may be assumed to resist overturning. Any effects of passive pressure, either on the shear key or on the piles, which resist overturning, shall be ignored.

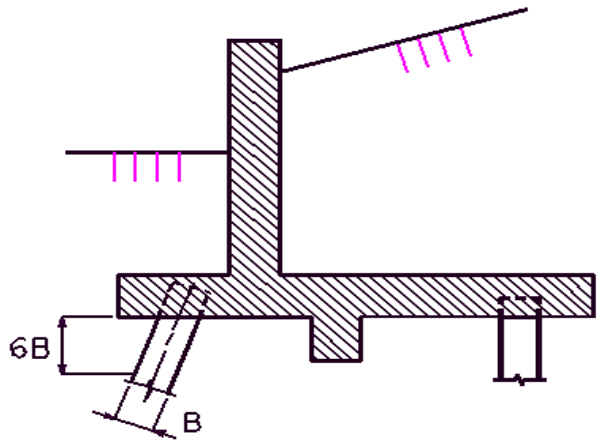

Pile Properties

Location of Resultant

The location of the resultant shall be evaluated at the bottom of the footing and can be determined by the equation below:

$$e = \frac{\sum M}{\sum V} \quad where:$$

e = the distance between the resultant and the neutral axis of the pile group

$\sum M$ = the sum of the moments taken about the neutral axis of the pile group at the bottom of the footing

$\sum V$ = the sum of the vertical loads used in calculating the moment

Pile Loads

The loads on the pile can be determined as follows:

$$P = \frac{\sum V}{A} \pm \frac{Mc}{I} \quad \text{Where:}$$

P = the force on the pile
A = the areas of all the piles being considered
M = the moment of the resultant about the neutral axis
c = distance from the neutral axis to the centerline of the pile being investigated
I = the moment of inertia of the pile group

Stem Design

AASHTO 5.5.6.2

The vertical stem (the wall portion) of a cantilever retaining wall shall be designed as a cantilever supported at the base.

Footing Design

Toe

AASHTO 5.5.6.1

The toe of the base slab of a cantilever wall shall be designed as a cantilever supported by the wall. The critical section for bending moments shall be taken at the front face of the stem. The critical section for shear shall be taken at a distance d (d = effective depth) from the front face of the stem.

Heel

AASHTO 5.5.6.1

The top reinforcement in the rear projection (heel) of the base slab shall be designed to support the entire weight of the superimposed materials plus any tension load in the heel piles (neglect compression loads in the pile), unless a more exact method is used. The bottom reinforcement in the heel of the base slab shall be designed to support the maximum compression load in the pile neglecting the weight of the superimposed materials. The heel shall be designed as a cantilever supported by the wall. The critical sections for bending moments and shear shall be taken at the back face of the stem.

Shear Key Design

The shear key shall be designed as a cantilever supported at the bottom of the footing.

Counterfort Walls

Assumptions:

(1) Stability

The external stability of a counterfort retaining wall shall be determined in the same manner as described for cantilever retaining walls. Therefore refer to previous pages for the criteria for location of resultant, factor of safety for sliding, and bearing pressures.

(2) Stem

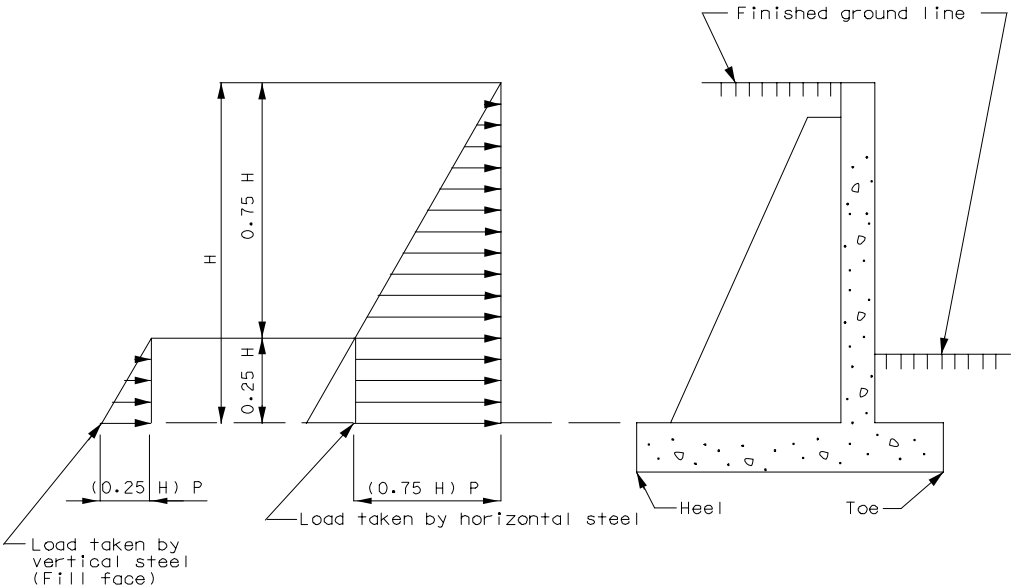

$P = Ca\ \gamma_s$ where: Ca = coefficient of active earth pressure, γ_s = unit weight of soil

Design the wall to support horizontal load from the earth pressure and the liveload surcharge (If applicable) as outlined on the previous pages and as designated in AASHTO Article 3.20, except that maximum horizontal loads shall be the calculated equivalent fluid pressure at 3/4 height of wall [(0.75 H)P] which shall be considered applied uniformly from the lower quarter point to the bottom of wall.

In addition, vertical steel in the fill face of the bottom quarter of the wall shall be that required by the vertical cantilever wall with the equivalent fluid pressure of that (0.25 H) height.

Maximum concrete stress shall be assumed as the greater of the two thus obtained.

(2) Stem (Cont.)

The application of these horizontal pressures shall be as follows:

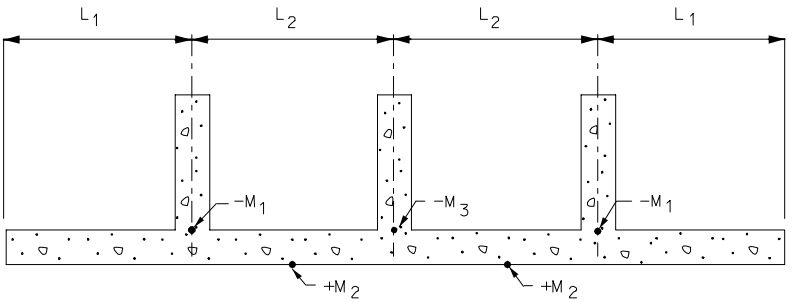

COUNTERFORT WALL SECTION

Moments are to be determined by analysis as a continuous beam. The counterforts are to be spaced so as to cause positive and negative moments to be approximately equal.

(3) Counterfort

Counterforts shall be designed as T-beams, of which the wall is the flange and the counterfort is the stem. For this reason the concrete stresses are normally low and will not control.

For the design of reinforcing steel in the back of the counterfort, the effective d shall be the perpendicular distance from the front face of the wall (at point that moment is considered), to center of reinforcing steel. (See sketch)

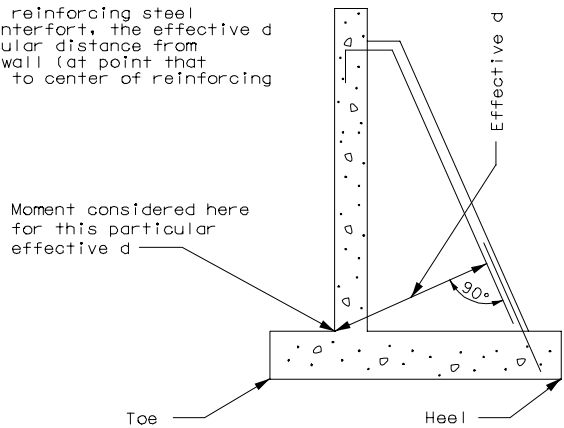

(4) Footing

The footing of the counterfort walls shall be designed as a continuous beam of spans equal to the distance between the counterforts.

The rear projection or heel shall be designed to support the entire weight of the superimposed materials, unless a more exact method is used. Refer to AASHTO-Article 5.5.6.

Divide footing (Transversely) into four (4) equal sections for design footing pressures.

Counterfort walls on pile are very rare and are to be treated as special cases. See Structural Project Manager.

(5) Sign-Board type walls

The Sign-Board type of retaining walls are a special case of the counterfort retaining walls. This type of wall is used where the soil conditions are such that the footings must be placed a great distance below the finished ground line. For this situation, the wall is discontinued approximately 12" below the finished ground line or below the frost line.

Due to the large depth of the counterforts, it may be more economical to use a smaller number of counterforts than would otherwise be used.

(5) Sign-Board type walls: (Continued)

All design assumptions that apply to counterfort walls will apply to sign-board walls with the exception of the application of horizontal forces for the stem (Or wall design),and the footing design which shall be as follows:

(A) Wall

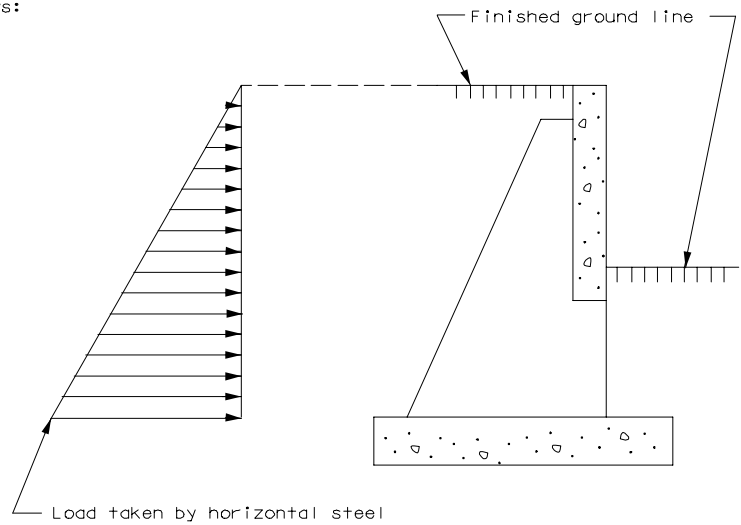

(B) Footing

The individual footings shall be designed transversely as cantilevers supported by the wall. Refer to AASHTO - Article Section 5.

3.3 Example 1: Spread Footing Cantilever Wall

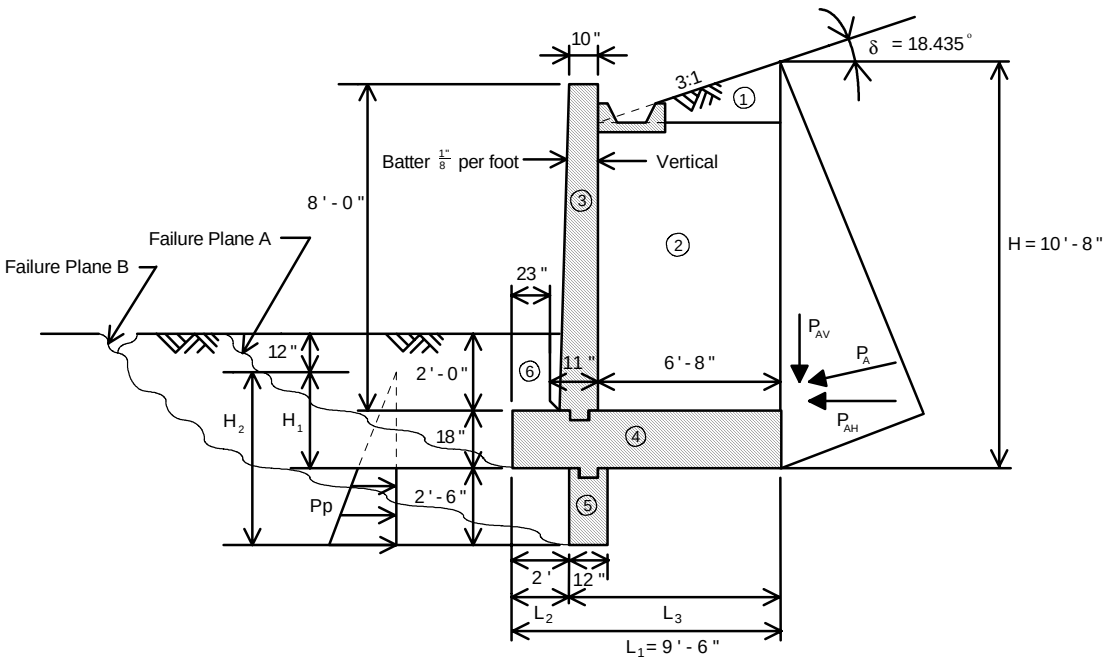

TYPICAL SECTION THRU WALL
(Spread Footing)

f'_c = 3,000 psi f_y = 60,000 psi $\phi = 24^o$ γ_s = 120 pcf (unit wgt of soil)
Allowable soil pressure = 2 tsf γ_c = 150 pcf (unit wgt of concr.)
Retaining wall is located in Seismic Performance Category (SPC) B.
A = 0.1 (A = seismic acceleration coefficient)

$P_a = \frac{1}{2}\gamma_s C_a H^2$ $P_p = \frac{1}{2}\gamma_s C_p \; H_2^2 - H_1^2$

Assumptions

- Retaining wall is under an abutment or in a location where failure of the wall may affect the structural integrity of a bridge. Therefore, it must be designed for SPC B.
- Design is for a unit length (1 foot) of wall.
- Sum moments about the toe at the bottom of the footing for overturning.
- For Group Loads I-VI loading:
  - F.S. for overturning ≥ 2.0 for footings on soil.
  - F.S. for sliding ≥ 1.5.
  - Resultant to be within middle 1/3 of footing.
- For earthquake loading:
  - F.S. for overturning ≥ 0.75(2.0) = 1.5.
  - F.S. for sliding ≥ 0.75(1.5) = 1.125.
  - Resultant to be within middle 1/2 of footing.
- Base of footing is below the frost line.
- Neglect top one foot of fill over toe when determining passive pressure and soil weight.

- Use of a shear key shifts the failure plane to "B" where resistance to sliding is provided by passive pressure against the shear key, friction of soil along failure plane "B" in front of the key, and friction between soil and concrete along the footing behind the key.
- Soil cohesion along failure plane is neglected.
- Footings are designed as cantilevers supported by the wall.
  - Critical sections for bending are at the front and back faces of the wall.
  - Critical sections for shear are at the back face of the wall for the heel and at a distance d (effective depth) from the front face for the toe.
- Neglect soil weight above toe of footing in design of the toe.
- The wall is designed as a cantilever supported by the footing.
- Load factors for AASHTO Groups I - VI for design of concrete:
  - $\gamma = 1.3$.
  - $\beta_E = 1.3$ for horizontal earth pressure on retaining walls.
  - $\beta_E = 1.0$ for vertical earth pressure.
- Load factor for earthquake loads = 1.0.

Lateral Pressures Without Earthquake

$$C_a = \cos\delta\left[\frac{\cos\delta - \sqrt{\cos^2\delta - \cos^2\phi}}{\cos\delta + \sqrt{\cos^2\delta - \cos^2\phi}}\right]$$

$$C_a = \cos 18.435^o\left[\frac{\cos 18.435^o - \sqrt{\cos^2 18.435^o - \cos^2 24^o}}{\cos 18.435^o + \sqrt{\cos^2 18.435^o - \cos^2 24^o}}\right] = 0.546$$

$$C_p = \tan^2(45^o + \tfrac{\phi}{2}) = \tan^2(45^o + \tfrac{24^o}{2}) = 2.371$$

$$P_A = \tfrac{1}{2}\left[0.120\tfrac{k}{ft^3}\right](1ft)(0.546)(10.667ft)^2 = 3.726k$$

$$P_P = \tfrac{1}{2}\left[0.120\tfrac{k}{ft^3}\right](1ft)(2.371)\left[(5.0)^2 - (2.5)^2\right] = 2.668k$$

$$P_{AV} = P_A(\sin\delta) = 3.726k(\sin 18.435^o) = 1.178k$$

$$P_{AH} = P_A(\cos\delta) = 3.726k(\cos 18.435^o) = 3.534k$$

Load	Area (ft^2)	Force (k) = (Unit Wgt.)(Area)	Arm (ft)	Moment (ft-k)
(1)	(0.5)(6.667ft)(2.222ft) = 7.407	0.889	7.278	6.469
(2)	(6.667ft)(6.944ft) = 46.296	5.556	6.167	34.259
(3)	(0.833ft)(8.000ft) + (0.5)(0.083ft)(8.000ft) = 7.000	1.050	2.396	2.515
(4)	(1.500ft)(9.500ft) = 14.250	2.138	4.750	10.153
(5)	(2.500ft)(1.000ft) = 2.500	0.375	2.500	0.938
(6)	(1.000ft)(1.917ft)+ (0.5)(0.010ft)(1.000ft) = 1.922	0.231	0.961	0.222
Σ		ΣV = 10.239		ΣM_R = 54.556
P_{AV}		1.178	9.500	11.192
Σ resisting		ΣV = 11.417		ΣM_R = 65.748
P_{AH}		3.534	3.556	12.567
P_P		2.668	1.389[a]	

a. The passive capacity at the shear key is ignored in overturning checks,since this capacity is considered in the factor of safety against sliding. It is assumed that a sliding and overturning failure will not occur simultaneously. The passive capacity at the shear key is developed only if the wall does slide.

$$\bar{y} = \frac{H_1 y^2 + \frac{2}{3}y^3}{H_2^2 - H_1^2} = \frac{(2.5ft)(2.5ft)^2 + \frac{2}{3}(2.5ft)^3}{(5.0ft)^2 - (2.5ft)^2} = 1.389ft$$

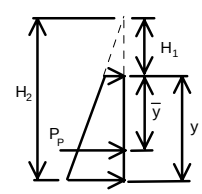

Overturning

$$F.S. = \frac{M_R}{M_{OT}} = \frac{65.748(ft-k)}{12.567(ft-k)} = 5.232 \geq 2.0 \quad \underline{\text{o.k.}}$$

where: M_{OT} = overturning moment; M_R = resisting moment

Resultant Eccentricity

$$\bar{x} = \frac{(65.748 - 12.567)(ft-k)}{11.417k} = 4.658ft$$

$$e = \frac{9.500ft}{2} - 4.658ft = 0.092ft$$

$$\frac{L}{6} = \frac{9.500ft}{6} = 1.583ft > e \quad \underline{\text{o.k.}}$$

Sliding

Check if shear key is required for Group Loads I-VI:

$$F.S. = \frac{\Sigma V(\tan\phi_{s-c})}{P_{AH}} = \frac{11.042k(\tan\frac{2}{3}(24°))}{3.534k} = 0.896 \quad \underline{\text{no good - shear key req'd}}$$

where: ϕ_{s-c} = angle of friction between soil and concrete = $(2/3)\phi_{s-s}$

$$F.S. = \frac{P_p + (\Sigma V)\left|\left(\frac{L_2}{L_1}\tan\phi_{s-s} + \left(\frac{L_3}{L_1}\right)\tan\phi_{s-c}\right|\right.}{P_{AH}}$$

where: $\phi_{s\text{-}s}$ = angle of internal friction of soil

$$F.S. = \frac{2.668k + (11.417k)\left[\left(\frac{2ft}{9.50ft}\right)\tan 24° + \left(\frac{7.50ft}{9.50ft}\right)\tan\left(\frac{2}{3}(24°)\right)\right]}{3.534k} = 1.789 \geq 1.5 \qquad \underline{\text{o.k.}}$$

Footing Pressure

$$P = \frac{\Sigma V}{bL}\left[1 \pm \frac{6e}{L}\right]$$

P_H = pressure at heel $\quad P_H = \frac{11.417k}{(1ft)9.50ft}\left[1 - \frac{6(0.092ft)}{9.50ft}\right] = 1.132\frac{k}{ft^2}$

P_T = pressure at toe $\quad P_T = \frac{11.417k}{(1ft)9.50ft}\left[1 + \frac{6(0.092ft)}{9.50ft}\right] = 1.272\frac{k}{ft^2}$

$$Allowable \quad pressure = 2\frac{tons}{ft^2} = 4\frac{k}{ft^2} \geq 1.272\frac{k}{ft^2} \qquad \underline{\text{o.k.}}$$

Lateral Pressures With Earthquake

$$k_h = 0.5A = 0.5(0.1) = 0.05$$

$$k_v = 0$$

$$\theta = \arctan\left[\frac{k_h}{1-k_v}\right] = \arctan\left[\frac{0.05}{1-0}\right] = 2.862^o$$

Active Pressure on Psuedo-Wall

$\delta = \phi = 24^o$ (δ is the angle of friction between the soil and the wall. In this case, $\delta = \phi$ because the soil wedge considered is next to the soil above the footing.)

$i = 18.435^o$
$\beta = 0°$

$$K_{AE} = \frac{\cos^2(\phi - \theta - \beta)}{\cos\theta\cos^2\beta\cos(\delta+\beta+\theta)\left\{1 + \sqrt{\frac{\sin(\phi+\delta)\sin(\phi-\theta-i)}{\cos(\delta+\beta+\theta)\cos(i-\beta)}}\right\}^2}$$

$$K_{AE} = \frac{\cos^2(24^o - 2.862^o - 0^o)}{\cos(2.862^o)\cos^2(0^o)\cos(24^o + 0^o + 2.862^o)\left\{1 + \sqrt{\frac{\sin(24^o+24^o)\sin(24^o - 2.862^o - 18.435^o)}{\cos(24^o+0^o+2.862^o)\cos(18.435^o - 0^o)}}\right\}^2}$$

$K_{AE} = 0.674$

$$P_{AE} = \frac{1}{2}\gamma_s H^2(1 - k_v)K_{AE}$$

$$P_{AE} = \frac{1}{2}\left[0.120\frac{k}{ft^3}\right](10.667ft)^2(1ft)(1-0)(0.674) = 4.602k$$
$$P_{AEV} = P_{AE}(\sin\delta) = 4.602k(\sin 24^o) = 1.872k$$

$$P_{AEH} = P_{AE}(\cos\delta) = 4.602k(\cos 24^o) = 4.204k$$

$$P'_{AH} = P_{AEH} - P_{AH} = 4.204k - 3.534k = 0.670k$$

$$P'_{AV} = P_{AEV} - P_{AV} = 1.872k - 1.178k = 0.694k$$

where: P'_{AH} and P'_{AV} are the seismic components of the active force.

Passive Pressure on Shear Key

$\delta = \phi = 24°$ ($\delta = \phi$ because the soil wedge considered is assumed to form in front of the footing.)
$i = 0°$
$\beta = 0°$

$$K_{PE} = \frac{\cos^2(\phi-\theta+\beta)}{\cos\theta\cos^2\beta\cos(\delta-\beta+\theta)\left\{1-\sqrt{\frac{\sin(\phi-\delta)\sin(\phi-\theta+i)}{\cos(\delta-\beta+\theta)\cos(i-\beta)}}\right\}^2}$$

$$K_{PE} = \frac{\cos^2(24^o-2.862^o+0^o)}{\cos(2.862^o)\cos^2(0^o)\cos(24^o-0^o+2.862^o)\left\{1-\sqrt{\frac{\sin(24^o-24^o)\sin(24^o-2.862^o+0^o)}{\cos(24^o-0^o+2.862^o)\cos(0^o-0^o)}}\right\}^2}$$

$K_{PE} = 0.976$

$$P_{PE} = \tfrac{1}{2}\gamma_s H^2(1-k_v)K_{PE}$$

$$P_{PE} = \tfrac{1}{2}\left[0.120\tfrac{k}{ft^3}\right]\left[(5.0ft)^2-(2.5ft)^2\right](1ft)(1-0)(0.976) = 1.098k$$

Load	Force (k)	Arm (ft)	Moment (ft-k)
Σ (1) thru (6)	10.239		54.556
P_{AV}	1.178	9.500	11.192
P'_{AV}	0.694	9.500	6.593
Σ resisting	ΣV = 12.111		ΣM_R = 72.341
P_{AH}	3.534	3.556	12.567
P'_{AH}	0.670	6.400[a]	4.288
P_{PEV}	0.447[b]	0.000	0.000
P_{PEH}	1.003[b]	1.389[c]	0.000
			ΣM_{OT} = 16.855

a. P'_{AH} acts at 0.6H of the wedge face (1992 AASHTO Div. IA Commentary).
b. P_{PEV} and P_{PEH} are the components of P_{PE} with respect to δ (the friction angle). P_{PE} does not contribute to overturning.
c. The line of action of P_{PEH} can be located as was done for P_P.

Overturning

$$F.S._{OT} = \frac{72.341(ft-k)}{16.855(ft-k)} = 4.292 > 1.5 \qquad \text{o.k.}$$

Resultant Eccentricity

$\bar{x} = \frac{72.341(ft\text{–}k)\text{–}16.855(ft\text{–}k)}{12.111k} = 4.581ft$

$e = \frac{9.5ft}{2} - 4.581ft = 0.169ft$

$\frac{L}{4} = \frac{9.5ft}{4} = 2.375ft > e$ <u>o.k.</u>

Sliding

$F.S. = \frac{1.003k + 12.111k\left[\left(\frac{2}{9.5}\right)\tan 24° + \left(\frac{7.5}{9.5}\right)\tan\left(\frac{2}{3}(24°)\right)\right]}{4.204k} = 1.161 > 1.125$ <u>o.k.</u>

Footing Pressure

for $e \le \frac{L}{6}$:

$P = \frac{\sum V}{bL}\left[1 \pm \frac{6e}{L}\right]$

P_H = pressure at heel $P_H = \frac{12.111k}{(1ft)9.50ft}\left[1 - \frac{6(0.169ft)}{9.50ft}\right] = 1.139\frac{k}{ft^2}$

P_T = pressure at toe $P_T = \frac{12.111k}{(1ft)9.50ft}\left[1 + \frac{6(0.169ft)}{9.50ft}\right] = 1.411\frac{k}{ft^2}$

Allowable soil pressure for earthquake = 2(allowable soil pressure)

$(2)\left[4\frac{k}{ft^2}\right] = 8\frac{k}{ft^2} > 1.411\frac{k}{ft^2}$ <u>o.k.</u>

Reinforcement-Stem

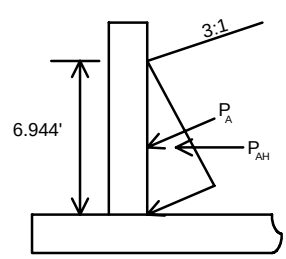

d = 11" - 2" - (1/2)(0.5") = 8.75"
b = 12"
f'_c = 3,000 psi

Without Earthquake

$P_{AH} = \frac{1}{2}\left[0.120\frac{k}{ft^3}\right](0.546)(6.944ft)^2(1ft)(\cos 18.435°) = 1.499k$

$\gamma = 1.3$

$\beta_E = 1.3$ (active lateral earth pressure)

M_u = (1.3)(1.3)(1.499k)(2.315ft) = 5.865 (ft-k)

With Earthquake

k_h=0.05
k_v=0

$\theta = 2.862°$

1992 AASHTO Div. IA Commentary

$\delta = \frac{\phi}{2} = \frac{24°}{2} = 12°$ for angle of friction between soil and wall. This criteria is used only for seismic loading if the angle of friction is not known.

$\phi = 24°$

$i = 18.435°$

$\beta = 0°$

K_{AE}=0.654

$P_{AEH} = \frac{1}{2}\gamma_S K_{AE} H^2 \cos\delta$

$P_{AEH} = \frac{1}{2}\left[0.120\frac{k}{ft}\right](0.654)(6.944ft)^2(1ft)\cos(12^o) = 1.851k$

$M_u = (1.499k)(2.315ft) + (1.851k - 1.499k)(0.6(6.944ft)) = 4.936(ft-k)$

The moment without earthquake controls.

$R_n = \frac{M_u}{\phi bd^2} = \frac{5.865(ft-k)}{0.9(1ft)(8.75in)^2}\left(1000\frac{lb}{k}\right) = 85.116psi$

$\rho = \frac{0.85f'_c}{f_y}\left[1 - \sqrt{1 - \frac{2R_n}{0.85f'_c}}\right]$

$\rho = \frac{0.85(3{,}000psi)}{60{,}000psi}\left[1 - \sqrt{1 - \frac{2(85.116psi)}{0.85(3{,}000psi)}}\right] = 0.00144$

AASHTO 8.17.1.1 & 8.15.2.1.1

$\rho_{min} = 1.7\left[\frac{h}{d}\right]^2 \frac{\sqrt{f'_c}}{f_y} = 1.7\left[\frac{11in}{8.75in}\right]^2 \frac{\sqrt{3{,}000psi}}{60{,}000psi} = 0.00245$

Use $\rho = \frac{4}{3}\rho = \frac{4}{3}(0.00144) = 0.00192$

$A_{S_{Req.}} = \rho bd = 0.00192(12in)(8.75in) = 0.202\frac{in^2}{ft}$

One # 4 bar has A_S = 0.196 in^2

$\frac{s}{0.196in^2} = \frac{12in}{0.202in^2}$

$s = 11.64in$

<u>Use # 4's @ 10" cts.</u>

Check Shear

$V_u \geq \phi V_n$

Without Earthquake

$V_u = (1.3)(1.3)(1.499k) = 2.533k$

With Earthquake

$V_u = 1.851k$

The shear force without earthquake controls.

$\frac{v_u}{\phi} = \frac{2.533k}{0.85(12in)(8.75in)}(1000\frac{lb}{k}) = 28.4psi$

$v_c = 2\sqrt{3{,}000psi} = 109.5psi > 28.4psi$ <u>o.k.</u>

Reinforcement-Footing-Heel

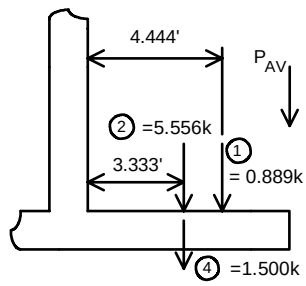

Note: Earthquake will not control and will not be checked.
$\beta_E = 1.0$ (vertical earth pressure)
d = 18" - 3" - (1/2)(0.750") = 14.625"
b = 12"
f'$_c$ = 3,000 psi

$$M_u = 1.3[(5.556k + 1.500k)(3.333ft) + 0.889k(4.444ft) + 1.178k(6.667ft)]$$
$$M_u = 45.919(ft - k)$$
$$R_n = \frac{45.919(ft-k)}{0.9(1ft)(14.625in)^2}(1000\tfrac{lb}{k}) = 238.5psi$$
$$\rho = \frac{0.85(3{,}000)psi}{60{,}000psi}\left[1 - \sqrt{1 - \frac{2(238.5psi)}{0.85(3{,}000psi)}}\right] = 0.00418$$
$$\rho_{min} = 1.7\left[\frac{18in}{14.625in}\right]^2 \frac{\sqrt{3{,}000psi}}{60{,}000psi} = 0.00235$$
$$A_{S_{Req.}} = 0.00418(12in)(14.625in) = 0.734\tfrac{in^2}{ft}$$

<u>Use # 6's @ 7" cts.</u>

Check Shear

Shear shall be checked at back face of stem.

$$V_u = 1.3(5.556k + 1.500k + 0.889k + 1.178k) = 11.860k$$
$$\frac{v_u}{\phi} = \frac{11.860k}{0.85(12in)(14.625in)}(1000\tfrac{lb}{k}) = 79.5psi < 2\sqrt{3{,}000psi} = 109.5psi \quad \text{o.k.}$$

Reinforcement-Footing-Toe

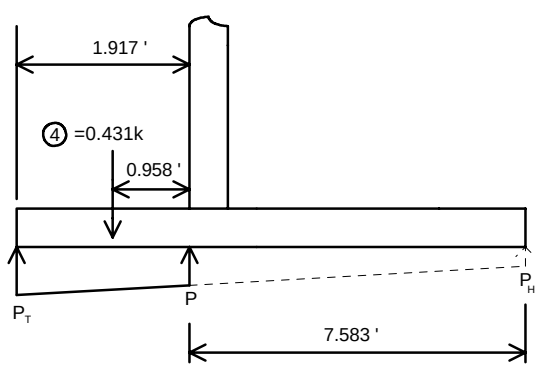

d = 18" - 4" = 14"
b = 12"

Without Earthquake

Apply Load Factors

load 4 (weight) = 0.431k(1.3)(1.0) = 0.560k
β_E = 1.3 for lateral earth pressure for retaining walls.
β_F = 1.0 for vertical earth pressure.

$$\Sigma M_{OT} = 12.567(ft-k)(1.3)(1.3) = 21.238(ft-k)$$
$$\Sigma M_R = [54.556(ft-k) + 11.192(ft-k)](1.3)(1.0) = 85.472(ft-k)$$
$$\Sigma V = 11.417k(1.3)(1.0) = 14.842k$$

$$\bar{x} = \frac{85.472(ft-k) - 21.238(ft-k)}{14.842k} = 4.328ft$$

$$e = \frac{9.5ft}{2} - 4.328ft = 0.422ft$$

$$P_H = \frac{14.842k}{(1ft)(9.5ft)}\left[1 - \frac{6(0.422ft)}{9.5ft}\right] = 1.146\frac{k}{ft^2}$$

$$P_T = \frac{14.842k}{(1ft)(9.5ft)}\left[1 + \frac{6(0.422ft)}{9.5ft}\right] = 1.979\frac{k}{ft^2}$$

$$P = \left[\frac{1.979\frac{k}{ft} - 1.146\frac{k}{ft}}{9.5ft}\right](7.583ft) + 1.146\frac{k}{ft} = 1.811\frac{k}{ft}$$

$$M_u = 1.811\frac{k}{ft}\frac{(1.917ft)^2}{2} + \frac{1}{2}(1.917ft)^2\left[1.979\frac{k}{ft} - 1.811\frac{k}{ft}\right]\frac{2}{3} - 0.560k(0.958ft)$$

$$M_u = 2.997(ft-k)$$

With Earthquake

$$P_H = 1.139\frac{k}{ft}$$
$$P_T = 1.411\frac{k}{ft}$$

$$P = \left[\frac{1.411\frac{k}{ft} - 1.139\frac{k}{ft}}{9.5ft}\right](7.583ft) + 1.139\frac{k}{ft} = 1.356\frac{k}{ft}$$

$$M_u = 1.356\frac{k}{ft}\frac{(1.917ft)^2}{2} + \frac{1}{2}(1.917ft)^2\left[1.411\frac{k}{ft} - 1.356\frac{k}{ft}\right]\frac{2}{3} - 0.431k(0.958ft)$$

$$M_u = 2.146(ft-k)$$

The moment without earthquake controls.

$$R_n = \frac{2.997(ft-k)}{0.9(1ft)(14.0in)^2}(1000\frac{lb}{k}) = 16.990psi$$
$$\rho = \frac{0.85(3{,}000psi)}{60{,}000psi}\left[1 - \sqrt{1 - \frac{2(16.990psi)}{0.85(3{,}000psi)}}\right] = 0.000284$$

$$\rho_{min} = 1.7\left[\frac{18in}{14.0in}\right]^2 \frac{\sqrt{3{,}000psi}}{60{,}000psi} = 0.00257$$

Use $\rho = \frac{4}{3}\rho = \frac{4}{3}(0.000284) = 0.000379$

$$A_{S_{Req.}} = 0.000379(12in)(14.0in) = 0.064\frac{in^2}{ft}$$

$$\frac{12in}{0.064in^2} = \frac{s}{0.196in^2}$$

$$s = 36.8in$$

Minimum is # 4 bars at 12 inches. These will be the same bars that are in the back of the stem. Use the smaller of the two spacings.

<u>Use # 4's @ 10" cts.</u>

Check Shear

Shear shall be checked at a distance "d" from the face of the stem.

Without Earthquake

$$P_d = \left[\frac{1.979\frac{k}{ft} - 1.146\frac{k}{ft}}{9.5ft}\right](8.750ft) + 1.146\frac{k}{ft} = 1.913\frac{k}{ft}$$

$$V_u = \frac{1.979\frac{k}{ft} + 1.913\frac{k}{ft}}{2}(0.750ft) - 1.3\left[0.225\frac{k}{ft}\right](0.750ft) = 1.240k$$

With Earthquake

$$P_d = \left[\frac{1.411\frac{k}{ft} - 1.139\frac{k}{ft}}{9.5ft}\right](8.750ft) + 1.139\frac{k}{ft} = 1.390\frac{k}{ft}$$

$$V_u = \frac{1.411\frac{k}{ft} + 1.139\frac{k}{ft}}{2}(0.750ft) - \left[0.225\frac{k}{ft}\right](0.750ft) = 0.788k$$

Shear without earthquake controls.

$$\frac{v_u}{\phi} = \frac{1.240k}{0.85(12in)(14.0in)}\left(1000\frac{lb}{k}\right) = 8.7psi < 2\sqrt{3{,}000psi} = 109.5psi \qquad \underline{\text{o.k.}}$$

Reinforcement-Shear Key

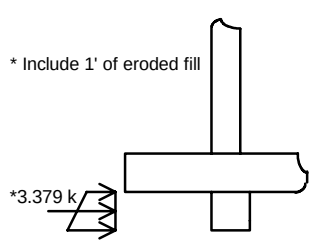

The passive pressure is higher without earthquake loads.

$\gamma = 1.3$

$\beta_E = 1.3$ (lateral earth pressure)

d = 12"-3"-(1/2)(0.5") = 8.75"
b = 12"

$$M_u = (3.379k)(1.360ft)(1.3)(1.3) = 7.764(ft-k)$$

$$R_n = \frac{7.764(ft-k)}{0.9(1ft)(8.75in)^2}(1000\tfrac{lb}{k}) = 112.677psi$$

$$\rho = \frac{0.85(3{,}000psi)}{60{,}000psi}\left[1-\sqrt{1-\frac{2(112.677psi)}{0.85(3{,}000psi)}}\right] = 0.00192$$

$$\rho_{min} = 1.7\left[\frac{12in}{8.75in}\right]^2\frac{\sqrt{3{,}000psi}}{60{,}000psi} = 0.00292$$

Use $\rho = \frac{4}{3}\rho = \frac{4}{3}(0.00192) = 0.00256$

$$A_{S_{Req.}} = 0.00256(12in)(8.75in) = 0.269\frac{in^2}{ft}$$

<u>Use # 4 @ 8.5 in cts.</u>

Check Shear

$$\frac{v_u}{\phi} = \frac{1.3(3.379k)(1.3)}{0.85(12in)(8.75in)}(1000\tfrac{lb}{k}) = 64.0psi < 2\sqrt{3{,}000psi} = 109.5psi \quad \text{o.k.}$$

Reinforcement Summary

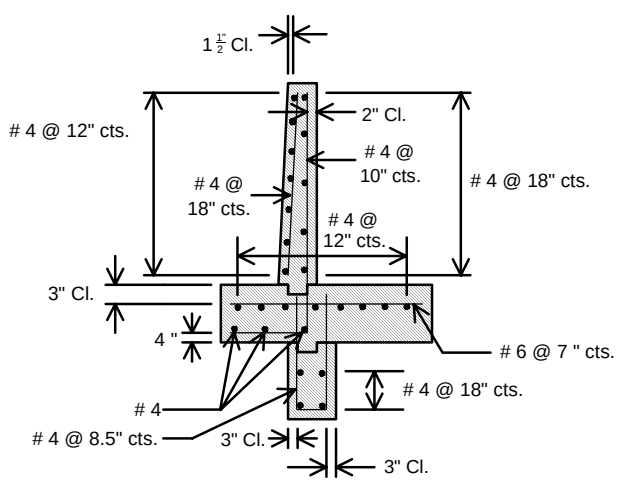

3.4 Example 2: L-Shaped Cantilever Wall

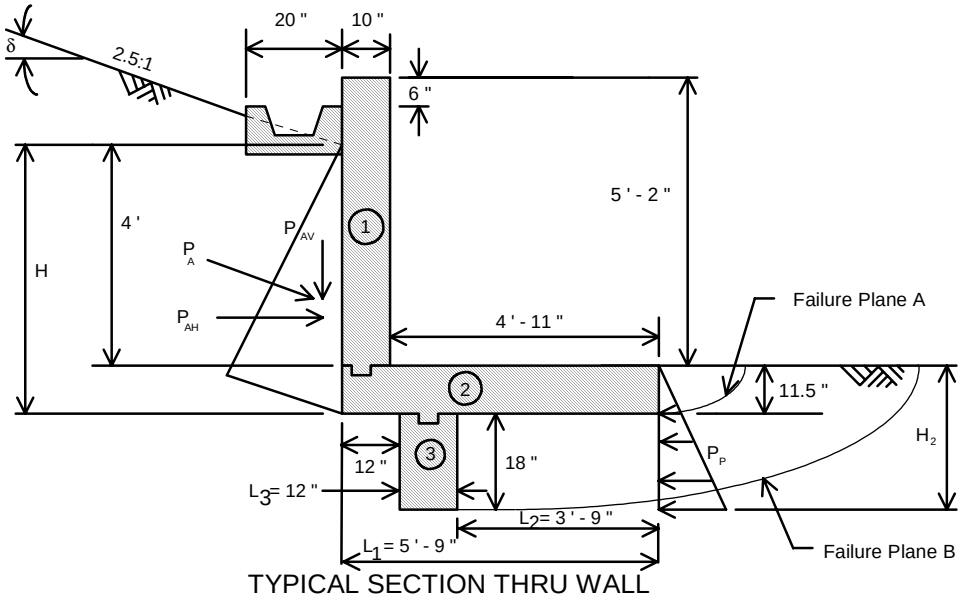

TYPICAL SECTION THRU WALL
(Spread Footing)

f'_c = 4,000 psi f_y = 60,000 psi $\phi = 29°$ $\gamma_s = 120pcf$
Allowable soil pressure = 1.5 tsf = 3.0 ksf
Retaining wall is located in Seismic Performance Category (SPC) A.
$\delta = \tan^{-1}\ \frac{1}{2.5}\ = 21.801^o$

$$C_a = \cos\delta\left[\frac{\cos\delta - \sqrt{\cos^2\delta - \cos^2\phi}}{\cos\delta + \sqrt{\cos^2\delta - \cos^2\phi}}\right] = 0.462$$

$$C_p = \tan^2\left[45 + \frac{\phi}{2}\right] = 2.882$$

$$P_A = \frac{1}{2}\gamma_s C_a H^2 = \frac{1}{2}(0.120\frac{k}{ft^3})(0.462)(4.958ft)^2 = 0.681k$$

For sliding, P_P is assumed to act only on the portion of key below the frost line which is set at an 18in. depth on the southeren border.

$$P_P = \frac{1}{2}(0.120\frac{k}{ft^3})(2.882)\left[(2.458ft)^2 - (1.500ft)^2\right] = 0.656k$$

Assumptions

- Design is for a unit length (1 foot) of wall.
- Sum moments about the toe at the bottom of the footing for overturning.
- F.S. for overturning ≥ 2.0 for footings on soil.
- F.S. for sliding ≥ 1.5 for footings on soil.
- Resultant of dead load and earth pressure to be in back half of the middle third of the footing if subjected to frost heave.
- For all loading combinations the resultant must be in the middle third of the footing except for collision loads.
- The top 12 inches of the soil is not neglected in determining the passive pressure because the soil there will be maintained.

- Frost line is set at 18 inches at the south border for Missouri.
- Portions of shear key which are above the frost line are assumed not to resist sliding by passive pressure.
- Use of a shear key shifts the failure plane to "B" where resistance to sliding is also provided by friction of soil along the failure plane in front of the shear key. Friction between the soil and concrete behind the shear key will be neglected.
- Soil cohesion along the failure plane is neglected.
- Live loads can move to within 1 foot of the stem face and 1 foot from the toe.
- The wall is designed as a cantilever supported by the footing.
- Footing is designed as a cantilever supported by the wall. Critical sections for bending and shear will be taken at the face of the wall.
- Load factors for AASHTO Groups I-VI for design of concrete are:
  - γ = 1.3.
  - β_E = 1.3 for horizontal earth pressure on retaining walls.
  - β_E = 1.0 for vertical earth pressure.
  - β_{LL} = 1.67 for live loads and collision loads.

Dead Load and Earth Pressure - Stabilty and Pressure Checks

Load	Force (k)	Arm (in)	Moment (ft-k)
(1)	(0.833ft)(5.167ft)(0.150k/ft^3) = 0.646	5.333	3.444
(2)	(0.958ft)(5.750ft)(0.150k/ft^3) = 0.827	2.875	2.376
(3)	(1.000ft)(1.500ft)(0.150k/ft^3) = 0.225	4.250	0.956
	ΣV = 1.698		ΣM_R = 6.776
P_{AV}	0.253	5.750	1.455
	ΣV = 1.951		ΣM_R = 8.231
P_{AH}	0.633	1.653	1.045
P_P	0.656	1.06[a.]	
			ΣM_{OT} = 1.045

a. The passive pressure at the shear key is ignored in overturning checks.

Overturning

$$F.S. = \frac{\Sigma M_R}{\Sigma M_{OT}} = \frac{8.231(ft\text{–}k)}{1.045(ft\text{–}k)} = 7.877 \geq 2.0 \qquad \underline{\text{o.k.}}$$

Location of Resultant

MoDOT policy is that the resultant must be in the back half of the middle third of the footing when considering dead and earth loads:

$$\left[\frac{5.750ft}{2} = 2.875ft\right] \leq \bar{x} \leq \left[\left(\frac{5.750ft}{2} + \frac{5.750ft}{6}\right) = 3.833ft\right]$$

$$\bar{x} = \frac{M_{NET}}{\Sigma V} = \frac{8.231(ft\text{–}k) - 1.045(ft\text{–}k)}{1.951k} = 3.683ft \qquad \underline{\text{o.k.}}$$

Sliding

$$F.S. = \frac{P_P + \Sigma V \left| \left(\frac{L_2}{L_1}\right) \tan\phi_{s-s} + \left(\frac{L_3}{L_1}\right) \tan\phi_{s-c} \right|}{P_{AH}}$$

where: $\phi_{s\text{-}s}$ = angle of internal friction of soil
$\phi_{s\text{-}c}$ = angle of friction between soil and concrete = $(2/3)\phi_{s\text{-}s}$

$$F.S. = \frac{0.656k + (1.951k)\left[\left(\frac{3.75ft}{5.75ft}\right)\tan 29° + \left(\frac{1ft}{5.75ft}\right)\tan\left(\frac{2}{3}(29°)\right)\right]}{0.633k} = 2.339 \geq 1.5 \quad \underline{\text{o.k.}}$$

Footing Pressure

$$P = \frac{\Sigma V}{bL}\left[1 \pm \frac{6e}{L}\right]$$

$$e = \bar{x} - \frac{L}{2} = 3.683ft - \frac{5.75ft}{2} = 0.808ft$$

Heel: $P_H = \frac{1.951k}{(1ft)(5.75ft)}\left[1 + \frac{6(0.808ft)}{5.75ft}\right] = 0.625ksf < 3.0ksf$ <u>o.k.</u>

Toe: $P_T = \frac{1.951k}{(1ft)(5.75ft)}\left[1 - \frac{6(0.808ft)}{5.75ft}\right] = 0.053ksf < 3.0ksf$ <u>o.k.</u>

Dead Load, Earth Pressure, and Live Load - Stability and Pressure Checks

Stability is not an issue because the live load resists overturning and increases the sliding friction force.

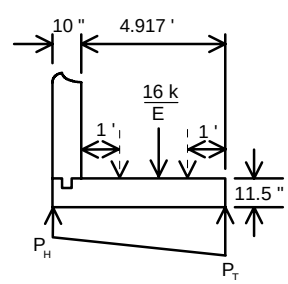

The live load will be distributed as:
$F_{LL} = \frac{LL_{WL}}{E}$ *where* $E = 0.8X + 3.75$
X = distance in feet from the load to the front face of wall

The live load will be positioned as shown by the dashed lines above. The bearing pressure and resultant location will be determined for these two positions.

Live Load 1 ft From Stem Face

Resultant Eccentricity

X=1ft
E=0.8(1ft)+3.75=4.55ft
$F_{LL} = \frac{16k}{4.55ft}(1ft) = 3.516k$

$$\bar{x} = \frac{M_{NET}}{\sum V} = \frac{8.231(ft-k)+(3.516k)(3.917ft)-1.045(ft-k)}{1.951k+3.516k} = 3.834ft$$

$$e = \bar{x} - \frac{L}{2} = 3.834ft - \frac{5.75ft}{2} = 0.959ft \le \frac{L}{6} = \frac{5.75ft}{6} = 0.958ft \quad \underline{\text{o.k.}}$$

Footing Pressure

$$P = \frac{\sum V}{bL}\left[1 \pm \frac{6e}{L}\right]$$

Allowable Pressure = 3.0ksf

Heel: $P_H = \frac{5.467k}{(1ft)(5.75ft)}\left[1 + \frac{6(0.959ft)}{5.75ft}\right] = 1.902ksf$ <u>o.k.</u>

Toe: $P_T = \frac{5.467k}{(1ft)(5.75ft)}\left[1 - \frac{6(0.959ft)}{5.75ft}\right] = 0.000ksf$ <u>o.k.</u>

Live Load 1 ft From Toe

Resultant Eccentricity

X=3.917ft
E=0.8(3.917ft)+3.75=6.883ft
$F_{LL} = \frac{16k}{6.883ft}(1ft) = 2.324k$

$$\bar{x} = \frac{8.231(ft-k)+(2.324k)(1ft)-1.045(ft-k)}{1.951k+2.324k} = 2.225ft$$

$$e = \frac{L}{2} - \bar{x} = \frac{5.75ft}{2} - 2.225ft = 0.650ft \le \frac{L}{6} = \frac{5.75ft}{6} = 0.958ft \quad \underline{\text{o.k.}}$$

Footing Pressure

Allowable Pressure = 3.0ksf

Heel: $P_H = \frac{4.275k}{(1ft)(5.75ft)}\left[1 - \frac{6(0.650ft)}{5.75ft}\right] = 0.239ksf$ <u>o.k.</u>

Toe: $P_H = \frac{4.275k}{(1ft)(5.75ft)}\left[1 + \frac{6(0.650ft)}{5.75ft}\right] = 1.248ksf$ <u>o.k.</u>

Dead Load, Earth Pressure, Collision Load, and Live Load - Stability and Pressure Checks

During a collision, the live load will be close to the wall so check this combination when the live load is one foot from the face of the stem. Sliding (in either direction) will not be an issue. Stability about the heel should be checked although it is unlikely to be a problem. There are no criteria for the location of the resultant, so long as the footing pressure does not exceed 125% of the allowable. It is assumed that the distributed collision force will develop an equal and opposite force on the fillface of the back wall unless it exceeds the passive pressure that can be developed by soil behind the wall.

F_{LL}=3.516k

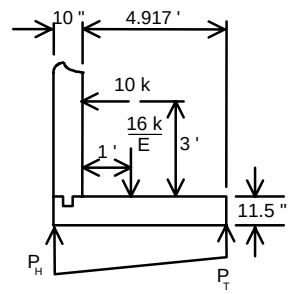

$$F_{COLL} = \frac{10k}{2(3ft)}(1ft) = 1.667k$$

$$C_P = \cos\delta\left[\frac{\cos\delta + \sqrt{\cos^2\delta - \cos^2\phi}}{\cos\delta - \sqrt{\cos^2\delta - \cos^2\phi}}\right] = 1.867$$

$$P_{PH} = \frac{1}{2}\gamma_s C_P H^2 \cos\delta = \frac{1}{2}(0.120kcf)(1.867)(4.958ft)^2\cos(21.801°)$$

P_{PH}=2.556k > F_{COLL} Thus the soil will develop an equal but opp. force.

Overturning About the Heel

$$F.S. = \frac{(0.646k)(0.417ft)+(0.827k)(2.875ft)+(0.225k)(1.500ft)+(3.516k)(1.833ft)+(1.667k)(\frac{4.958ft}{3})}{(1.667k)(3.958ft)}$$

$$F.S. = \frac{12.184(ft-k)}{6.598(ft-k)} = 1.847 \geq 1.2 \qquad \underline{\text{o.k.}}$$

Footing Pressure

$$\bar{x} = \frac{12.184(ft-k)-6.598(ft-k)}{1.951k+3.516k} = 1.022ft \text{ from heel}$$

$$e = \frac{5.75ft}{2} - 1.022ft = 1.853ft$$

Allowable Pressure = (1.25)(3.0ksf)=3.75ksf

Heel: $P_H = \frac{2(\sum V)}{3b\left[\frac{L}{2}-e\right]} = \frac{2(5.467k)}{3(1ft)\left[\frac{5.75ft}{2}-1.853ft\right]} = 3.566ksf$ <u>o.k.</u>

Stem Design-Steel in Rear Face

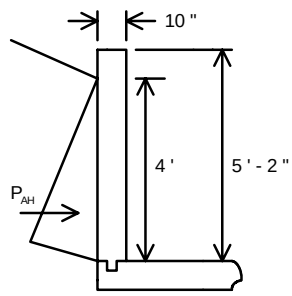

$\gamma = 1.3$
$\beta_E = 1.3$ (active lateral earth pressure)
$d = 10in - 2in - \frac{0.5in}{2} = 7.75in$

$P_{AH} = \frac{1}{2}\gamma_s C_a H^2 \cos\delta = \frac{1}{2}\left[0.120\frac{k}{ft^3}\right](0.462)(4ft)^2(1ft)\cos 21.801^o$

$P_{AH} = 0.412k$

$M_u = (1.333ft)(0.412k)(1.3)(1.3) = 0.928(ft-k)$

$R_n = \frac{M_u}{\phi bd^2} = \frac{0.928(ft-k)}{(0.9)(1ft)(7.75in)^2}\left(1000\frac{lb}{k}\right) = 17.160psi$

$\rho = \frac{0.85f'_c}{f_y}\left[1-\sqrt{1-\frac{2R_n}{0.85f'_c}}\right]$

$\rho = \frac{0.85(4,000psi)}{60,000psi}\left[1-\sqrt{1-\frac{2(17.160psi)}{0.85(4000psi)}}\right] = 0.000287$

$\rho_{min} = 1.7\left[\frac{h}{d}\right]^2\frac{\sqrt{f'_c}}{f_y}$

$\rho_{min} = 1.7\left[\frac{10in}{7.75in}\right]^2\frac{\sqrt{4,000psi}}{60,000psi} = 0.00298$

Use $\rho = \frac{4}{3}\rho = \frac{4}{3}(0.000287) = 0.000382$

$A_{S_{Req.}} = \rho bd = 0.000382(12in)(7.75in) = 0.036\frac{in^2}{ft}$
One # 4 bar has A_S = 0.196 in^2 so the required minimum of one # 4 bar every 12 in. controls.

<u>Use # 4's @ 12 in. (min)</u>

(These bars are also the bars in the bottom of the footing so the smaller of the two required spacings will be used.)

Check Shear

$\frac{V_u}{\phi} \le V_n$

$\frac{v_u}{\phi} = \frac{(1.3)(1.3)(0.412k)}{0.85(12in)(7.75in)}(1000\frac{lb}{k}) = 8.8psi$

$v_c = 2\sqrt{f'_c}$

$v_c = 2\sqrt{4,000psi} = 126.5psi > 8.8psi$ <u>o.k.</u>

Stem Design-Steel in Front Face (Collision Loads)

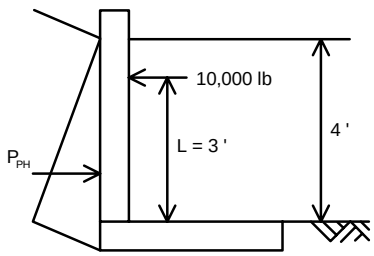

The soil pressure on the back of the stem becomes passive soil pressure during a collision, however this pressure is ignored for reinforcement design.

$\gamma = 1.3$
$\beta_{LL} = 1.67$
$d = 10in - 1.5in - 0.5in - \frac{0.5in}{2} = 7.75in$

$F_{COLL} = \frac{10k}{2L} = \frac{10k}{(2)(3ft)} = 1.667\frac{k}{ft}$
$M_u = 1.667\frac{k}{ft}(1ft)(3ft)(1.3)(1.67) = 10.855(ft-k)$

$R_n = \frac{10.855(ft-k)}{0.9(1ft)(7.75in)^2}(1000\frac{lb}{k}) = 200.809psi$

$\rho = \frac{0.85(4,000psi)}{60,000psi}\left[1 - \sqrt{1 - \frac{2(200.809psi)}{0.85(4,000psi)}}\right] = 0.00345$

$\rho_{min} = 1.7\left[\frac{10in}{7.75in}\right]^2 \frac{\sqrt{4,000psi}}{60,000psi} = 0.00298$

$A_{S_{Req.}} = 0.00345(12in)(7.75in) = 0.321\frac{in^2}{ft}$

One # 4 bar has A_S = 0.196 in^2

$\frac{s}{0.196in^2} = \frac{12in}{0.321in^2}$

$s = 7.3in$

Use # 4's @ 7 in.

Check Shear

$\frac{v_u}{\phi} = \frac{(1.3)(1.67)(1.667k)}{(0.85)(12in)(7.75in)}(1000\frac{lb}{k}) = 45.8psi < 126.5psi$ o.k.

Footing Design - Bottom Steel

It is not considered necessary to design footing reinforcement based upon a load case which includes collision loads.

Dead Load and Earth Pressure Only

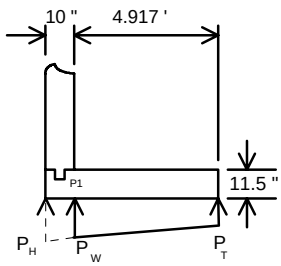

$Footing\ wt. = \left[\frac{11.5}{12}ft\right](4.917ft)\left[0.150\frac{k}{ft^3}\right](1ft) = 0.707k$

$\beta_E = 1.3$ (lateral earth pressure)

$\gamma = 1.3$

Apply Load Factors:

$\Sigma V = 1.951k(1.3) = 2.536k$

$\Sigma M_R = 8.231(ft-k)(1.3) = 10.700(ft-k)$

$\Sigma M_{OT} = 1.045(ft-k)(1.3)(1.3) = 1.766(ft-k)$

$Footing\ wt. = 0.707k(1.3) = 0.919k$

$\bar{x} = \frac{10.700(ft-k)-1.766(ft-k)}{2.536k} = 3.523ft$

$e = 3.523ft - \frac{5.75ft}{2} = 0.648ft$

$P_H = \frac{2.536k}{(1ft)(5.75ft)}\left[1 + \frac{6(0.648ft)}{5.75ft}\right] = 0.739ksf$

$P_T = \frac{2.536k}{(1ft)(5.75ft)}\left[1 - \frac{6(0.648ft)}{5.75ft}\right] = 0.143ksf$

$P_W = 0.143ksf + [0.739ksf - 0.143ksf]\left[\frac{4.917ft}{5.75ft}\right] = 0.653ksf$

Moment at Wall Face:

$$M_W = \left[0.143\tfrac{k}{ft}\right]\left[\tfrac{(4.917ft)^2}{2}\right] + \tfrac{1}{3}(4.917ft)^2\left[0.653\tfrac{k}{ft} - 0.143\tfrac{k}{ft}\right]\tfrac{1}{2}$$
$$-0.919k\left[\tfrac{4.917ft}{2}\right] = 1.524(ft-k)$$

Dead Load, Earth Pressure, and Live Load

Live Load 1 ft From Stem Face

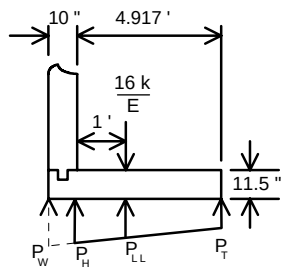

$\beta_E = 1.3$ (lateral earth pressure)
$\beta_{LL} = 1.67$
$\gamma = 1.3$

Apply Load Factors:

$$F_{LL} = 3.516k(1.3)(1.67) = 7.633k$$

$$\Sigma V = 7.633k + 1.951k(1.3) = 10.169k$$

$$\Sigma M_{OT} = 1.045(ft-k)(1.3)(1.3) = 1.766(ft-k)$$

$$\Sigma M_R = 8.231(ft-k)(1.3) + 3.917ft(7.633k) = 40.599(ft-k)$$

$$\bar{x} = \frac{40.599(ft-k) - 1.766(ft-k)}{10.169k} = 3.819ft$$

$$e = 3.819ft - \frac{5.75ft}{2} = 0.944ft$$

$$P_T = \left[\frac{10.169k}{(1ft)(5.75ft)}\right]\left[1 - \frac{6(0.944ft)}{5.75ft}\right] = 0.026ksf$$

$$P_H = \left[\frac{10.169k}{(1ft)(5.75ft)}\right]\left[1 + \frac{6(0.944ft)}{5.75ft}\right] = 3.511ksf$$

$$P_W = 0.026ksf + [3.511ksf - 0.026ksf]\left[\frac{4.917ft}{5.75ft}\right] = 3.006ksf$$

$$P_{LL} = 0.026ksf + [3.511ksf - 0.026ksf]\left[\frac{3.917ft}{5.75ft}\right] = 2.400ksf$$

Footing wt. from face of wall to toe:
$$Footing\ wt. = 1.3\left[\tfrac{11.5}{12}ft\right](4.917ft)\left[0.150\tfrac{k}{ft^3}\right](1ft) = 0.919k$$
Footing wt. from LL_{WL} to toe:

$$Footing\ wt. = 1.3\left[\frac{11.5}{12}ft\right](3.917ft)\left[0.150\frac{k}{ft^3}\right](1ft) = 0.732k$$

Moment at Wall Face:

$$M_W = 0.026\frac{k}{ft}\frac{(4.917ft)^2}{2} - 7.633k(1ft)$$
$$+\frac{1}{2}\left[3.006\frac{k}{ft} - 0.026\frac{k}{ft}\right](4.917ft)^2\left[\frac{1}{3}\right] - 0.919k\frac{(4.917ft)}{2}$$
$$M_W = 2.430(ft-k)$$

Moment at LL_{WI}

$$M_{LL} = 0.026\frac{k}{ft}\frac{(3.917ft)^2}{2} - 0.732k\frac{(3.917ft)}{2}$$
$$+\frac{1}{2}\left[2.400\frac{k}{ft} - 0.026\frac{k}{ft}\right](3.917ft)^2\left[\frac{1}{3}\right] = 4.837(ft-k)$$

Live Load 1 ft From Toe

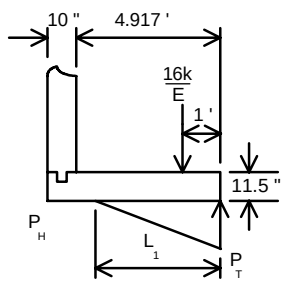

Apply Load Factors:

$$F_{LL} = 2.324k(1.3)(1.67) = 5.045k$$
$$\Sigma V = 5.045k + 1.951k(1.3) = 7.581k$$
$$\Sigma M_{OT} = 1.045(ft-k)(1.3)(1.3) = 1.766(ft-k)$$
$$\Sigma M_R = 8.231(ft-k)(1.3) + 5.045k(1ft) = 15.745(ft-k)$$

$$\bar{x} = \frac{15.745(ft-k) - 1.766(ft-k)}{7.581k} = 1.844ft$$

$$e = \frac{5.75ft}{2} - 1.844ft = 1.031ft$$

$$P_H = 0ksf$$

$$P_T = \frac{2(7.581k)}{3(1ft)\left[\frac{5.75ft}{2} - 1.031ft\right]} = 2.741ksf$$

$$L_1 = 3\left[\frac{L}{2} - e\right]$$

$$L_1 = 3\left[\frac{5.75ft}{2} - 1.031ft\right] = 5.532ft$$

$$P_W = 2.741ksf\left[\frac{0.615ft}{5.532ft}\right] = 0.305ksf$$

$$P_{LL} = 2.741ksf\left[\frac{4.432ft}{5.532ft}\right] = 2.196ksf$$

Moment at Wall Face:

$$M_W = -5.045k(3.917ft) - 0.919k\left[\frac{4.917ft}{2}\right] + \frac{1}{2}(0.305\frac{k}{ft})(4.917ft)^2$$
$$+\frac{1}{2}(4.917ft)^2\left[2.741\frac{k}{ft} - 0.305\frac{k}{ft}\right]\frac{2}{3} = 1.298(ft-k)$$

Moment at LL_{WI}:

$$M_{LL} = -0.187k(0.5ft) + 2.196\frac{k}{ft}\frac{(1ft)^2}{2}$$
$$+\frac{1}{2}(1ft)\left[2.741\frac{k}{ft} - 2.196\frac{k}{ft}\right]\left[\frac{2}{3}\right](1ft) = 1.186(ft-k)$$

Design Flexural Steel in Bottom of Footing

$d = 11.5in - 4in = 7.500in$

$M_u = 4.837(ft-k)$ (controlling moment)

$R_n = \frac{4.837(ft-k)}{0.9(1ft)(7.5in)^2} = 0.096ksi$

$\rho = \frac{0.85(4{,}000psi)}{60{,}000psi}\left[1 - \sqrt{1 - \frac{2(0.096ksi)}{0.85(4ksi)}}\right] = 0.00162$

$\rho_{\min} = 1.7\left[\frac{11.5in}{7.5in}\right]^2\frac{\sqrt{4{,}000psi}}{60{,}000psi} = 0.00421$

Use $\rho = \frac{4}{3}\rho = \frac{4}{3}(0.00162) = 0.00216$

$A_{S_{Req.}} = 0.00216(12in)(7.5in) = 0.194\frac{in^2}{ft}$

$\frac{s}{0.196in^2} = \frac{12in}{0.194in^2}$

$s = 12.1in$

<u>Use # 4's @ 12 in. cts.</u> (Also use this spacing in the back of the stem.)

Check Shear

Dead Load and Earth Pressure Only

$V_W = 0.143\frac{k}{ft}(4.917ft) + \frac{1}{2}(4.917ft)\left[0.653\frac{k}{ft} - 0.143\frac{k}{ft}\right] - 0.919k$

$V_W = 1.038k$

Live Load 1 ft From Stem Face

Shear at the wall can be neglected for this loading case.

$V_{LL} = 0.026\frac{k}{ft}(3.917ft) + \frac{1}{2}(3.917ft)\left[2.400\frac{k}{ft} - 0.026\frac{k}{ft}\right] - 0.732k$

$V_{LL} = 4.019k$

Live Load 1 ft From Toe

$$V_W = 0.305\tfrac{k}{ft}(4.917ft) + \tfrac{1}{2}(4.917ft)\left[2.741\tfrac{k}{ft} - 0.305\tfrac{k}{ft}\right] - 0.919k - 5.045k$$

$$V_W = 1.525k$$

$$V_{LL} = 2.196\tfrac{k}{ft}(1ft) + \tfrac{1}{2}(1ft)\left[2.741\tfrac{k}{ft} - 2.196\tfrac{k}{ft}\right] - 0.187k$$

$$V_{LL} = 2.282k$$

Use $V_U = 4.019k$

$$\frac{v_u}{\phi} = \frac{4019(lbs)}{0.85(12in)(7.5in)} = 52.5psi < 2\sqrt{4000psi} = 126.5psi \quad \underline{\text{o.k.}}$$

Shear Key Design

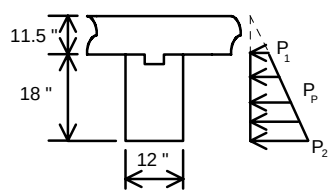

For concrete cast against and permanently exposed to earth, minimum cover for reinforcement is 3 inches.

$$d = 12in - 3in - \tfrac{1}{2}\left[\tfrac{1}{2}in\right] = 8.75in$$

$$P_1 = 0.120\tfrac{k}{ft^3}(1ft)(2.882)\left[\tfrac{11.5}{12}ft\right] = 0.331\tfrac{k}{ft}$$

$$P_2 = 0.120\tfrac{k}{ft^3}(1ft)(2.882)\left[\tfrac{29.5}{12}ft\right] = 0.850\tfrac{k}{ft}$$

$$M_u = (1.3)(1.3)\left\{0.331\tfrac{k}{ft}\tfrac{(1.5ft)^2}{2} + \tfrac{1}{2}(1.5ft)\left[0.850\tfrac{k}{ft} - 0.331\tfrac{k}{ft}\right]\left[\tfrac{2}{3}\right](1.5ft)\right\}$$

$$M_u = 1.287(ft-k)$$

$$R_n = \frac{1.287(ft-k)}{0.9(1ft)(8.75in)^2} = 0.0187ksi$$

$$\rho = \frac{0.85(4{,}000psi)}{60{,}000psi}\left[1 - \sqrt{1 - \frac{2(0.0187ksi)}{0.85(4ksi)}}\right] = 0.000312$$

$$\rho_{min} = 1.7\left[\frac{12in}{8.75in}\right]^2\frac{\sqrt{4{,}000psi}}{60{,}000psi} = 0.00337$$

Use $\rho = \tfrac{4}{3}\rho = \tfrac{4}{3}(0.000312) = 0.000416$

$$A_{S_{Req.}} = 0.000416(12in)(8.75in) = 0.0437\frac{in^2}{ft}$$

$$\frac{s}{0.196in^2} = \frac{12in}{0.0437in^2}$$

$s = 53.8in$

Use # 4 's @ 18 in. cts. (min)

Check Shear

$V = 0.886k$

$\frac{v_u}{\phi} = \frac{(1.3)(1.3)(886lbs)}{0.85(12in)(8.75in)} = 16.8psi < 126.5psi$ o.k.

Reinforcement Summary

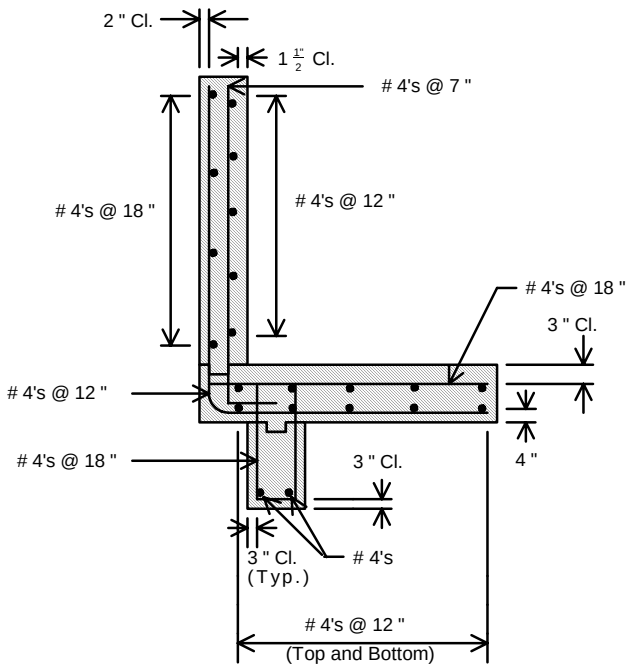

3.5 Example 3: Pile Footing Cantilever Wall

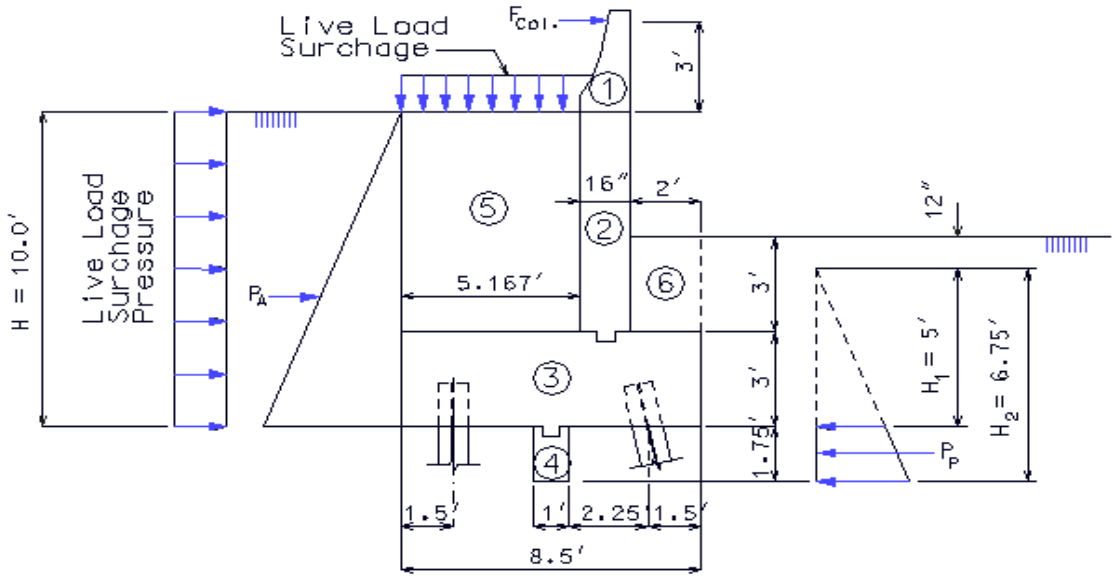

TYPICAL SECTION THROUGH WALL
(PILE FOOTING)

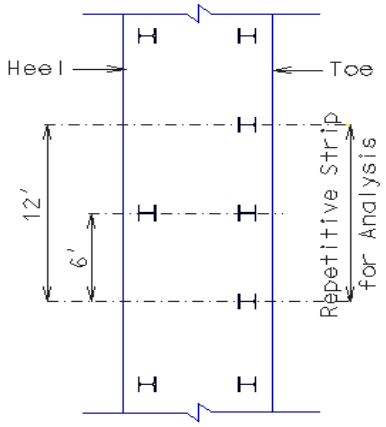

PLAN OF FOOTING

f'_c = 3,000 psi
f_y = 60,000 psi
$\phi = 27^o$
γ_s = 120 pcf
Pile type: HP 10 x 42
Allowable pile bearing = 56 tons
Pile width = 10 inches
Toe pile batter = 1:3
Barrier curb weight = 340 lbs/foot of length
Barrier curb resultant = 0.375 ft. from its flat back

Assumptions

- Retaining wall is located such that traffic can come within half of the wall height to the plane where earth pressure is applied.
- Reinforcement design is for one foot of wall length.
- Sum moments about the centerline of the toe pile at a distance of 6B (where B is the pile width) below the bottom of the footing for overturning.
- Neglect top one foot of fill over toe in determining soil weight and passive pressure on shear key.
- Neglect all fill over toe in designing stem reinforcement.
- The wall is designed as a cantilever supported by the footing.
- Footing is designed as a cantilever supported by the wall.
- Critical sections for bending are at the front and back faces of the wall.
- Critical sections for shear are at the back face of the wall for the heel and at a distance d (effective depth) from the front face for the toe.
- For load factors for design of concrete, see page 1.2-8 of this section.

$$C_A = \cos\delta \left[\frac{\cos\delta - \sqrt{\cos^2\delta - \cos^2\phi}}{\cos\delta + \sqrt{\cos^2\delta - \cos^2\phi}} \right]$$

δ = 0, $\phi = 27°$ so C_A reduces to:

$$C_A = \frac{1-\sin\phi}{1+\sin\phi} = \frac{1-\sin 27^o}{1+\sin 27^o} = 0.376$$

$$C_P = \tan^2\left[45^o + \frac{\phi}{2}\right] = \tan^2\left[45^o + \frac{27^o}{2}\right] = 2.663$$

Table is for stability check (moments taken about C.L. of toe pile at a depth of 6B below the bottom of the footing).

Load	Force (kips/ft)	Arm about C.L. of toe pile at 6B below footing (ft)	Moment (ft-kips) per foot of wall length
Dead Load			
(1)	0.340	2.542	0.864
(2)	(1.333ft)(7.000ft)(0.150k/ft^3)=1.400	2.833	3.966
(3)	(3.000ft)(8.500ft)(0.150k/ft^3)=3.825	4.417	16.895
(4)	(1.000ft)(1.750ft)(0.150k/ft^3)=0.263	4.417	1.162
Σ	Σ**V** = 5.828		ΣM_R = 22.887
Earth Load			
(5)	(7.000ft)(5.167ft)(0.120k/ft^3)=4.340	6.083	26.400
(6)	(2.000ft)(2.000ft)(0.120k/ft^3)=0.480	1.167	0.560
Σ	Σ**V** = 4.820		ΣM_R = 26.960
Live Load Surcharge			
P_{SV}	(2.000ft)(5.167ft)(0.120k/ft^3)=1.240	6.083	M_R =7.543
P_{SH}	(2.000ft)(0.376)(10.000ft)(0.120k/ft^3) = 0.902	10.000	M_{OT} =9.020
Earth Pressure			
P_A	2.256 [a]	8.333	M_{OT} = 18.799
P_P	3.285 [b]		
Collision Force (F_{COL})	(10.000k)/[2(7.000ft)] = 0.714	18.000	M_{OT} = 12.852
Heel Pile Tension (P_{HI})	(3.000tons)(2k/ton)(1pile)/(12.000ft) = 0.500	7.167	M_R = 3.584
Toe Pile Batter (P_{BH})	5.903 [c]		
Passive Pile Pressure (P_{pp})	0.832 [d]		

a. $P_A = \frac{1}{2}\gamma_S C_A H^2 = \frac{1}{2}\left[0.120\frac{k}{ft^3}\right](0.376)(10\,ft)^2 = 2.256\frac{k}{ft}$

b. $P_P = \frac{1}{2}\gamma_S C_P\left[H_2^2 - H_1^2\right] = \frac{1}{2}\left[0.120\frac{k}{ft^3}\right](2.663)\left[(6.75\,ft)^2 - (5\,ft)^2\right] = 3.285\frac{k}{ft}$

c. $P_{BH} = \left(56\frac{tons}{pile}\right)\left(2\frac{k}{ton}\right)(2\,piles)\left(\frac{4in}{\sqrt{(12in)^2 + (4in)^2}}\right)\left(\frac{1}{12\,ft}\right) = 5.903\frac{k}{ft}$

d. $P_{PP} = \frac{1}{2}(2.663)(5\,ft)^2\left(0.120\frac{k}{ft^3}\right)(0.833\,ft)(3\,piles)\left(\frac{1}{12\,ft}\right) = 0.832\frac{k}{ft}$

Table is for bearing pressure checks (moments taken about C.L of toe pile at the bottom of the footing).

Load	Force (kips/ft)	Arm about C.L. of toe pile at bottom of footing (ft)	Moment (ft-kips) per foot of wall length
Dead Load			
(1)	0.340	0.875	0.298
(2)	(1.333ft)(7.000ft)(0.150k/ft^3)=1.400	1.167	1.634
(3)	(3.000ft)(8.500ft)(0.150k/ft^3)=3.825	2.750	10.519
(4)	(1.000ft)(1.750ft)(0.150k/ft^3)=0.263	2.750	0.723
$\sum$	$\sum$**V** = 5.828		$\sum M_R$ = 13.174
Earth Load			
(5)	(7.000ft)(5.167ft)(0.120k/ft^3)=4.340	4.417	19.170
(6)	(2.000ft)(2.000ft)(0.120k/ft^3)=0.480	-0.500	-0.240
$\sum$	$\sum$**V** = 4.820		$\sum M_R$ = 18.930
Live Load Surcharge			
P_{SV}	(2.000ft)(5.167ft)(0.120k/ft^3)=1.240	4.417	M_R = 5.477
P_{SH}	(2.000ft)(0.376)(10.000ft)(0.120k/ft^3) = 0.902	5.000	M_{OT} = 4.510
Earth Pressure			
P_A	2.256	3.333	M_{OT} =7.519
P_P	3.285		
Collision Force (F_{COL})	(10.000k)/[2(7.000ft)] = 0.714	13.000	M_{OT} = 9.282
Heel Pile Tension (P_{HV})	(3.000tons)(2k/ton)(1pile)/(12.000ft) = 0.500	5.500	M_R = 2.750
Toe Pile Batter (P_{BH})	5.903		
Passive Pile Pressure (P_{pp})	0.832		

Investigate a representative 12 foot strip. This will include one heel pile and two toe piles. The assumption is made that the stiffness of a batter pile in the vertical direction is the same as that of a vertical pile.

Neutral Axis Location = $\frac{2piles(1.5ft)+1pile(7ft)}{3piles} = 3.333ft$ from the toe.

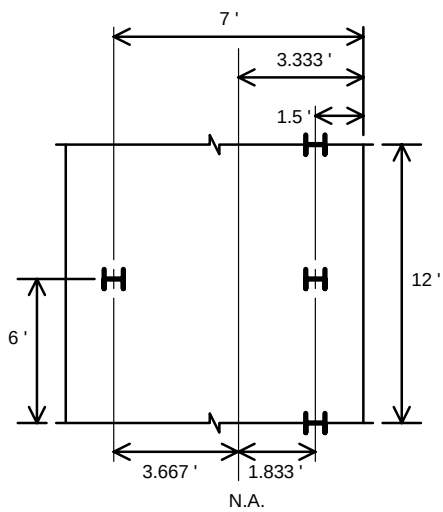

$I = Ad^2$

For repetitive 12ft strip:

Total pile area = 3A

$I = 2A(1.833ft)^2 + A(3.667ft)^2 = 20.167(A)ft^2$

For a 1ft unit strip:

$I = \frac{20.167(A)ft^2}{12ft} = 1.681(A)ft^2$

Total pile area = (3A/12ft)=0.250A

Case I

F.S. for overturning ≥ 1.5

F.S. for sliding ≥ 1.5

Check Overturning

Neglect resisting moment due to P_{SV} for this check.

$\Sigma M_R = 22.887(ft-k) + 26.960(ft-k) + 3.584(ft-k)$

$\Sigma M_R = 53.431(ft-k)$

$\Sigma M_{OT} = 9.020(ft-k) + 18.799(ft-k) = 27.819(ft-k)$

$F.S._{OT} = \frac{\Sigma M_R}{\Sigma M_{OT}} = \frac{53.431(ft-k)}{27.819(ft-k)} = 1.921 > 1.5$ <u>o.k.</u>

Check Pile Bearing

Without P_{SV} :

$$\Sigma V = 5.828k + 4.820k = 10.648k$$

$$e = \frac{\Sigma M}{\Sigma V} = \frac{(13.174+18.930)(ft-k)-(4.510+7.519)(ft-k)}{10.648k} = 1.885ft$$

Moment arm = 1.885ft - 1.833ft = 0.052ft

$$P_T = \frac{\Sigma V}{A} - \frac{Mc}{I} = \frac{10.648k}{0.250A} - \frac{10.648k(0.052ft)(1.833ft)}{1.681(A)ft^2}$$

$$P_T = \frac{41.988}{A}k$$

$$P_H = \frac{10.648k}{0.250A} + \frac{10.648k(0.052ft)(3.667ft)}{1.681(A)ft^2}$$

$$P_H = \frac{43.800}{A}k$$

Allowable pile load = 56tons/pile. Each pile has area A so:

$P_T = 41.988\frac{k}{pile} = 20.944\frac{tons}{pile}$ <u>o.k.</u>

$P_H = 43.800\frac{k}{pile} = 21.900\frac{tons}{pile}$ <u>o.k.</u>

WithP_{SV} :

$$\Sigma V = 5.828k + 4.820k + 1.240k = 11.888k$$

$$e = \frac{(13.174+18.930+5.477)(ft-k)-(4.510+7.519)(ft-k)}{11.888k} = 2.149ft$$

Moment arm = 2.149ft - 1.833ft = 0.316ft

$P_T = \frac{11.888k}{0.250A} - \frac{11.888k(0.316ft)(1.833ft)}{1.681(A)ft^2} = 43.456k = 21.728\frac{tons}{pile}$ <u>o.k.</u>

$P_H = \frac{11.888k}{0.250A} + \frac{11.888k(0.316ft)(3.667ft)}{1.681(A)ft^2} = 55.747k = 27.874\frac{tons}{pile}$ <u>o.k.</u>

Check Sliding

$F.S._{Sliding} = \frac{3.285k+5.903k+0.832k}{0.902k+2.256k} = 3.173 \geq 1.5$ <u>o.k.</u>

Case II

F.S. for overturning ≥ 1.2
F.S. for sliding ≥ 1.2

Check Overturning

$$\Sigma M_R = (22.887 + 26.960 + 7.543 + 3.584)(ft-k) = 60.974(ft-k)$$
$$\Sigma M_{OT} = (9.020 + 18.799 + 12.852)(ft-k) = 40.671(ft-k)$$

$F.S._{OT} = \frac{\Sigma M_R}{\Sigma M_{OT}} = \frac{60.974(ft-k)}{40.671(ft-k)} = 1.499 \geq 1.2$ <u>o.k.</u>

Check Pile Bearing

$$e = \frac{\Sigma M}{\Sigma V} = \frac{(13.174+18.930+5.477)(ft-k)-(4.510+7.519+9.282)(ft-k)}{(5.828+4.820+1.240)k} = 1.369ft$$

Moment arm = 1.833ft - 1.369ft = 0.464ft

$$P_T = \frac{\Sigma V}{A} + \frac{Mc}{I} = \frac{11.888k}{0.250A} + \frac{11.888k(0.464ft)(1.833ft)}{1.681(A)ft^2}$$
$$P_T = 53.567\frac{k}{pile} = 26.783\frac{tons}{pile} \le 56\frac{tons}{pile} \quad \underline{\text{o.k.}}$$
$$P_H = \frac{11.888k}{0.250A} - \frac{11.888k(0.464ft)(3.667ft)}{1.681(A)ft^2} = 35.519k$$
$$P_H = 17.760\frac{tons}{pile} \le 56\frac{tons}{pile} \quad \underline{\text{o.k.}}$$

Check Sliding

$$F.S._{Sliding} = \frac{3.285k+5.903k+0.832k}{0.902k+2.256k+0.714k} = 2.588 \ge 1.2 \quad \underline{\text{o.k.}}$$

Case III

F.S. for overturning ≥ 1.5
F.S. for sliding ≥ 1.5

Check Overturning

$$\Sigma M_R = (22.887 + 26.960 + 3.584)(ft-k) = 53.431(ft-k)$$
$$\Sigma M_{OT} = 18.799((ft-k)$$
$$F.S._{OT} = \frac{\Sigma M_R}{\Sigma M_{OT}} = \frac{53.431(ft-k)}{18.799(ft-k)} = 2.842 \ge 1.5 \quad \underline{\text{o.k.}}$$

Check Pile Bearing

$$e = \frac{\Sigma M}{\Sigma V} = \frac{(13.174+18.930)(ft-k)-7.519(ft-k)}{(5.828+4.820)k} = 2.309ft$$

Moment arm = 2.309ft - 1.833ft = 0.476ft

$$P_T = \frac{10.648k}{0.250A} - \frac{10.648k(0.476ft)(1.833ft)}{1.681(A)ft^2} = 37.065k$$
$$P_T = 18.532\frac{tons}{pille} \le 56\frac{tons}{pile} \quad \underline{\text{o.k.}}$$
$$P_H = \frac{10.648k}{0.250A} + \frac{10.648k(0.476ft)(3.667ft)}{1.681(A)ft^2} = 53.649k$$
$$P_H = 26.825\frac{tons}{pile} \le 56\frac{tons}{pile} \quad \underline{\text{o.k.}}$$

Check Sliding

$$F.S._{Sliding} = \frac{3.285k+5.903k+0.832k}{2.256k} = 4.441 \ge 1.5 \quad \underline{\text{o.k.}}$$

Case IV

Check Pile Bearing

$$e = \frac{\Sigma M}{\Sigma V} = \frac{(13.174+18.930)(ft-k)}{5.828k+4.820k} = 3.015ft$$

Moment arm = 3.015ft - 1.833ft = 1.182ft

$$P_H = \frac{\Sigma V}{A} + \frac{Mc}{I} = \frac{10.648k}{0.250A} + \frac{10.648k(1.182ft)(3.667ft)}{1.681(A)ft^2}$$
$$P_H = 70.047k = 35.024\frac{tons}{pile}$$

25% overstress is allowed on the heel pile:

$$P_H = 35.024\frac{tons}{pile} \le 1.25(56\frac{tons}{pile}) = 70\frac{tons}{pile} \quad \underline{\text{o.k.}}$$
$$P_T = \frac{10.648k}{0.250A} - \frac{10.648k(1.182ft)(1.833ft)}{1.681(A)ft^2} = 28.868k$$
$$P_T = 14.434\frac{tons}{pile} \le 56\frac{tons}{pile} \quad \underline{\text{o.k.}}$$

Reinforcement - Stem

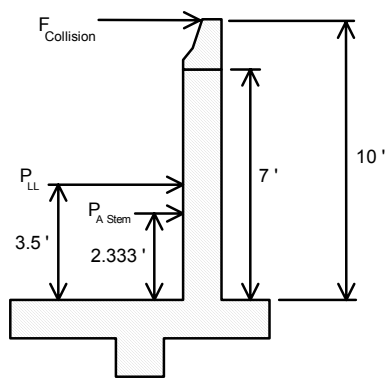

b = 12 in
cover = 2 in
h = 16 in
d = 16 in - 2 in - 0.5(0.625 in) = 13.688 in

$$F_{Collision} = 0.714\frac{k}{ft}$$
$$P_{LL} = \gamma_S C_A H(2.000ft) = (2.000ft)(0.376)(7.000ft)(0.120\frac{k}{ft^3}) = 0.632\frac{k}{ft}$$
$$P_{A_{Stem}} = \frac{1}{2}\gamma_S C_A H^2 = \frac{1}{2}\left[0.120\frac{k}{ft^3}\right](0.376)(7.000ft)^2 = 1.105\frac{k}{ft}$$

Apply Load Factors

$$F_{Col.} = \gamma\beta_{LL}(0.714k) = (1.3)(1.67)(0.714k) = 1.550k$$
$$P_{LL} = \gamma\beta_E(0.632k) = (1.3)(1.67)(0.632k) = 1.372k$$
$$P_{A_{Stem}} = \gamma\beta_E(1.105k) = (1.3)(1.3)(1.105k) = 1.867k$$

$$M_u = (10.00ft)(1.550k) + (3.500ft)(1.372k) + (2.333ft)(1.867k)$$

$M_u = 24.658(ft-k)$

$R_n = \frac{M_u}{\phi bd^2} = \frac{24.658(ft-k)}{(0.9)(1ft)(13.688in)^2} = 0.146ksi$

$\rho = \frac{0.85f'_c}{f_y}\left[1-\sqrt{1-\frac{2R_n}{0.85f'c}}\right] = \frac{0.85(3ksi)}{60ksi}\left[1-\sqrt{1-\frac{2(0.146ksi)}{0.85(3ksi)}}\right] = 0.00251$

$\rho_{min} = 1.7\left[\frac{h}{d}\right]^2\frac{\sqrt{f'_c}}{f_y} = 1.7\left[\frac{16in}{13.688in}\right]^2\frac{\sqrt{3000psi}}{60000psi} = 0.00212$

$\rho = 0.00251$

$A_{S_{Req.}} = \rho bd = (0.00251)(12in)(13.688in) = 0.412\frac{in^2}{ft}$

One # 5 bar has A_S = 0.307 in^2

$\frac{s}{0.307in^2} = \frac{12in}{0.412in^2}$

$s = 8.9in$

<u>Use # 5 bars @ 8.5 in. cts.</u>

Check Shear

$V_u \le \phi V_n$

$V_u = F_{Collision} + P_{LL} + P_{A_{Stem}} = 1.550k + 1.372k + 1.867k = 4.789k$

$\frac{v_u}{\phi} = \frac{V_u}{\phi bd} = \frac{4789lbs}{0.85(12in)(13.688in)} = 34.301psi$

$v_n = v_c = 2\sqrt{f'_c} = 2\sqrt{3,000psi} = 109.5psi > 34.3psi$ <u>o.k.</u>

Reinforcement - Footing - Top Steel

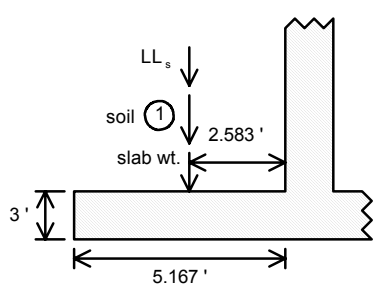

b = 12 in
cover = 3 in
h = 36 in
d = 36 in - 3 in - 0.5(0.5 in) = 32.750 in

Design the heel to support the entire weight of the superimposed materials.

$Soil(1) = 4.340\frac{k}{ft}$
$LL_s = 1.240\frac{k}{ft}$
$Slab\ wt. = (3.000ft)\left[0.150\frac{k}{ft^3}\right](5.167ft) = 2.325\frac{k}{ft}$

Apply Load Factors

$Soil(1) = \gamma\beta_E(4.340k) = (1.3)(1.0)(4.340k) = 5.642k$
$LL_s = \gamma\beta_E(1.240k) = (1.3)(1.67)(1.240k) = 2.692k$
$Slab\ wt. = \gamma\beta_D(2.325k) = (1.3)(1.0)(2.325k) = 3.023k$

$M_u = (2.583ft)(5.642k + 2.692k + 3.023k) = 29.335(ft - k)$

$R_n = \frac{M_u}{\phi bd^2} = \frac{29.335(ft-k)}{(0.9)(1ft)(32.750in)^2} = 0.0304ksi$

$\rho = \frac{0.85(3ksi)}{60ksi}\left[1 - \sqrt{1 - \frac{2(0.0304ksi)}{0.85(3ksi)}}\right] = 0.000510$

$\rho_{min} = 1.7\left[\frac{36in}{32.750in}\right]^2 \frac{\sqrt{3{,}000psi}}{60{,}000psi} = 0.00188$

Use $\rho = \frac{4}{3}\rho = \frac{4}{3}(0.000510) = 0.000680$

$A_{S_{Req.}} = \rho bd = (0.000680)(12in)(32.750in) = 0.267\frac{in^2}{ft}$

One # 4 bar has A_s = 0.196 in^2

$\frac{s}{0.196in^2} = \frac{12in}{0.267in^2}$

$s = 8.8in$

<u>Use # 4 bars @ 8.5 in. cts.</u>

Check Shear

$V_u = Soil(1) + LL_s + Slab\ wt. = 5.642k + 2.692k + 3.023k = 11.357k$

$\frac{v_u}{\phi} = \frac{V_u}{\phi bd} = \frac{11357lbs}{(0.85)(12in)(32.750in)} = 33.998psi \le 109.5psi = v_c$ <u>o.k.</u>

Reinforcement - Footing - Bottom Steel

Design the flexural steel in the bottom of the footing to resist the largest moment that the heel pile could exert on the footing. The largest heel pile bearing force was in Case IV. The heel pile will cause a larger moment about the stem face than the toe pile (even though there are two toe piles for every one heel pile) because it has a much longer moment arm about the stem face.

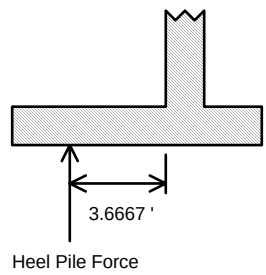

Pile is embedded into footing 12 inches.
b = 12 in
h = 36 in
d = 36 in - 4 in = 32 in

Apply Load Factors to Case IV Loads

$$\Sigma V = \gamma\beta_D\left[5.828\tfrac{k}{ft}\right] + \gamma\beta_E\left[4.820\tfrac{k}{ft}\right]$$
$$\Sigma V = 1.3(1.0)\left[5.828\tfrac{k}{ft}\right] + 1.3(1.0)\left[4.820\tfrac{k}{ft}\right]$$
$$\Sigma V = 13.842\tfrac{k}{ft}$$
$$\Sigma M = \gamma\beta_D\left[13.174\tfrac{(ft-k)}{ft}\right] + \gamma\beta_E\left[18.930\tfrac{(ft-k)}{ft}\right]$$
$$\Sigma M = (1.3)(1.0)\left[13.174\tfrac{(ft-k)}{ft}\right] + (1.3)(1.0)\left[18.930\tfrac{(ft-k)}{ft}\right]$$
$$\Sigma M = 41.735\tfrac{(ft-k)}{ft}$$

$$e = \frac{\Sigma M}{\Sigma V} = \frac{41.735(ft-k)}{13.842k} = 3.015ft$$

Moment arm = 3.015 ft -1.833 ft = 1.182 ft

$$P_H = \frac{\Sigma V}{A} + \frac{Mc}{I} = \frac{13.842k}{0.250A} + \frac{13.842k(1.182ft)(3.667ft)}{1.681(A)ft^2}$$

$$P_H = 91.059\frac{k}{pile}\left(\frac{1}{12ft}\right) = 7.588\frac{k}{ft}$$

$$M_u = \left(7.588\tfrac{k}{ft}\right)(3.667ft) = 27.825\tfrac{(ft-k)}{ft}$$

$$R_n = \frac{M_u}{\phi bd^2} = \frac{27.825(ft-k)}{(0.9)(1ft)(32in)^2} = 0.0301ksi$$

$$\rho = \frac{0.85(3ksi)}{60ksi}\left[1 - \sqrt{1 - \frac{2(0.0301ksi)}{0.85(3ksi)}}\right] = 0.000505$$

$$\rho_{\min} = 1.7\left[\frac{36in}{32in}\right]^2 \frac{\sqrt{3{,}000psi}}{60{,}000psi} = 0.00196$$

Use $\rho = \frac{4}{3}\rho = \frac{4}{3}(0.000505) = 0.000673$

$$A_{S_{Req.}} = \rho bd = (0.000673)(12in)(32in) = 0.258\frac{in^2}{ft}$$

One # 4 bar has A_s = 0.196 in^2 .

$$\frac{s}{0.196in^2} = \frac{12in}{0.258in^2}$$

$$s = 9.1in$$

Use # 4 bars @ 9 in. cts.

Check Shear

The critical section for shear for the toe is at a distance d = 21.75 inches from the face of the stem. The toe pile is 6 inches from the stem face so the toe pile shear does not affect the shear at the critical section. The critical section for shear is at the stem face for the heel so all of the force of the heel pile affects the shear at the critical section. The worst case for shear is Case IV.

$$V_u = 7.588k$$

$$\frac{\nu_u}{\phi} = \frac{V_u}{\phi bd} = \frac{7588lbs}{0.85(12in)(32in)} = 23.248psi \le 109.5psi = \nu_c \qquad \text{o.k.}$$

Reinforcement - Shear Key

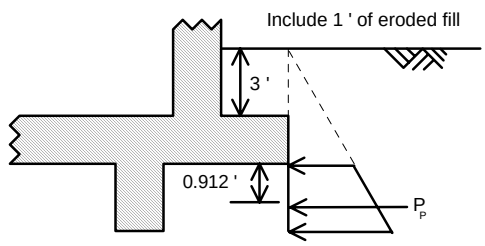

b = 12 in
h = 12 in
cover = 3 in
d = 12 in - 3 in - 0.5(0.5 in) = 8.75 in

Apply Load Factors

$$P_P = \gamma\beta_E(3.845k) = (1.3)(1.3)(3.845k) = 6.498k$$

$$M_u = (0.912ft)(6.498k) = 5.926(ft - k)$$

$$R_n = \frac{M_u}{\phi bd^2} = \frac{5.926(ft-k)}{(0.9)(1ft)(8.75in)^2} = 0.0860ksi$$

$$\rho = \frac{0.85(3ksi)}{60ksi}\left[1 - \sqrt{1 - \frac{2(0.0860ksi)}{0.85(3ksi)}}\right] = 0.00146$$

$$\rho_{min} = 1.7\left[\frac{12in}{8.75in}\right]^2 \frac{\sqrt{3{,}000psi}}{60{,}000psi} = 0.00292$$

Use $\rho = \frac{4}{3}\rho = \frac{4}{3}(0.00146) = 0.00195$

$A_{S_{Req.}} = \rho bd = (0.00195)(12in)(8.75in) = 0.205\frac{in^2}{ft}$

One # 4 bar has A_s = 0.196 in^2

$\frac{s}{0.196in^2} = \frac{12in}{0.205in^2}$

s = 11.5 in

<u>Use # 4 bars @ 11 in. cts.</u>

Check Shear

$\frac{v_u}{\phi} = \frac{V_u}{\phi bd} = \frac{6498lbs}{0.85(12in)(8.75in)} = 72.807psi < 109.5psi = v_c$

Reinforcement Summary

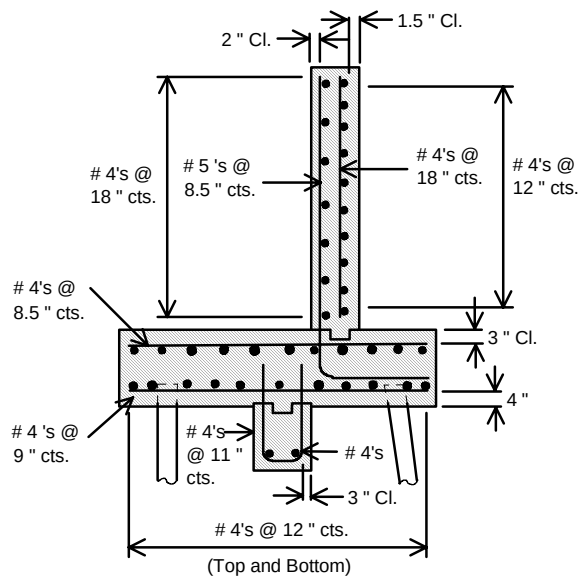

3.6 Dimensions

Cast-In-Place Concrete Retaining Walls

Cantilever Walls

Each section of wall shall be in increments of 4 feet with a maximum length of 28'-0".

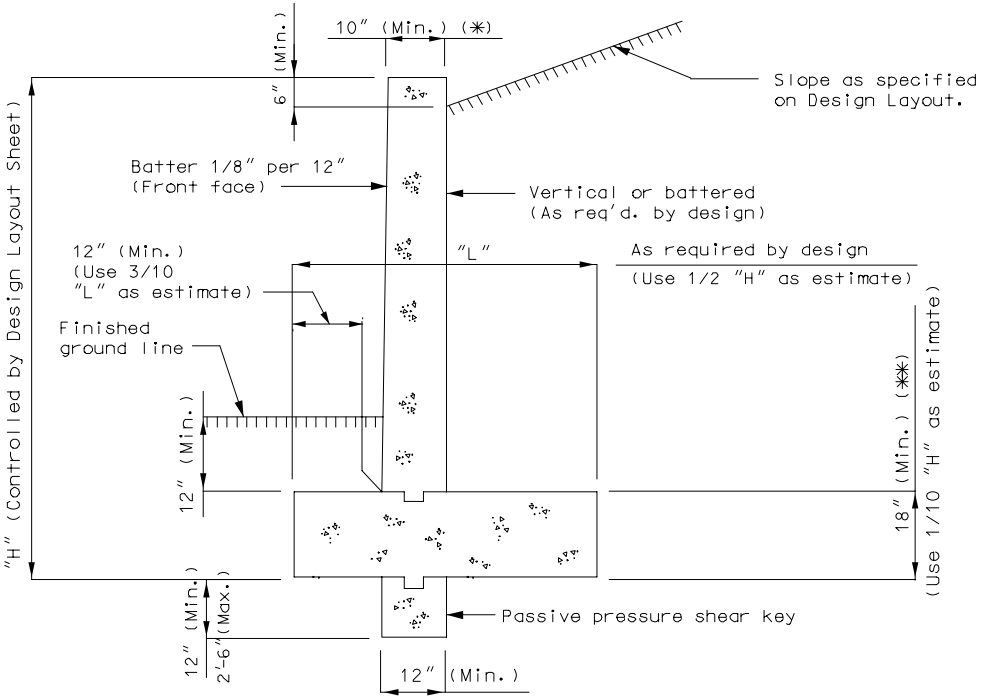

TYPICAL SECTION THRU WALL (SPREAD FOOTING)

(✳) 10-1/2" is minimum for median walls.

(✳✳) 15" is minimum for median walls.

① For SPC B, C and D follow guidelines for footing depth and pile embedment as given in Sec. 3.71 Page 5.1.4. See also Sec. 3.71 Page 5.3.3 and Sec. 3.74 Page 1.2.4 for channel shear connectors and anchorage reinforcement.

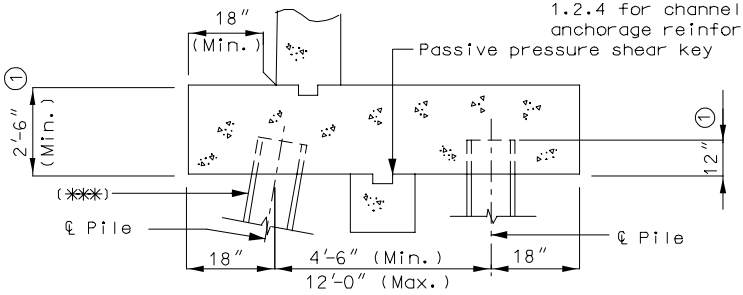

(✳✳✳) Batter 3" per 12" (Min.) and 4" per 12" (Max.), as required by design. Do not batter concrete pedestal piles.

TYPICAL PART SECTION THRU WALL (PILE FOOTING)

(Friction or bearing piles)

Each section of wall shall be in increments of 4 feet with a maximum length of 28'-0".

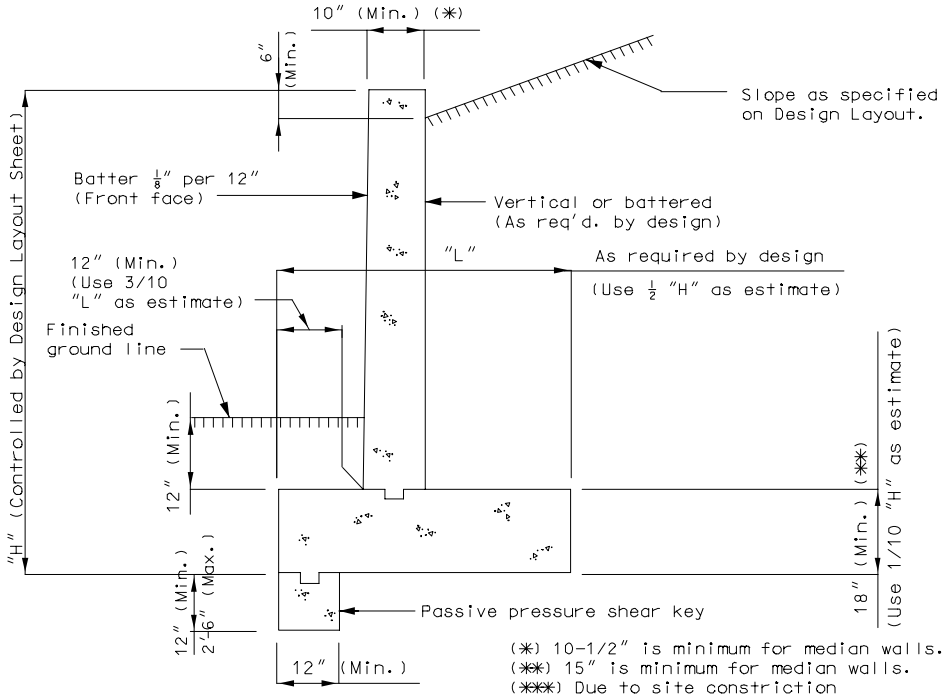

TYPICAL SECTION THRU WALL
(Spread footing)

(1) For SPC B, C and D follow guidelines for footing depth and pile embedment as given in Sec. 3.71 Page 5.1.4. See also Sec. 3.71 Page 5.3.3 and Sec. 3.74 Page 1.2.4 for channel shear connectors and anchorage reinforcement.

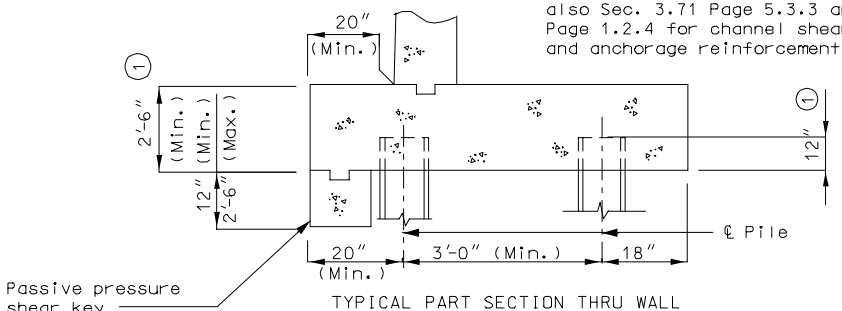

TYPICAL PART SECTION THRU WALL
(Pile footing)
(Concrete pedestal pile)
(Vertical friction or bearing pile) (✳✳✳)

Cantilever Walls - L Shaped

Cast-In-Place Concrete Retaining Walls

Each section of wall shall be in increments of 4 feet with a maximum length of 28'-0".

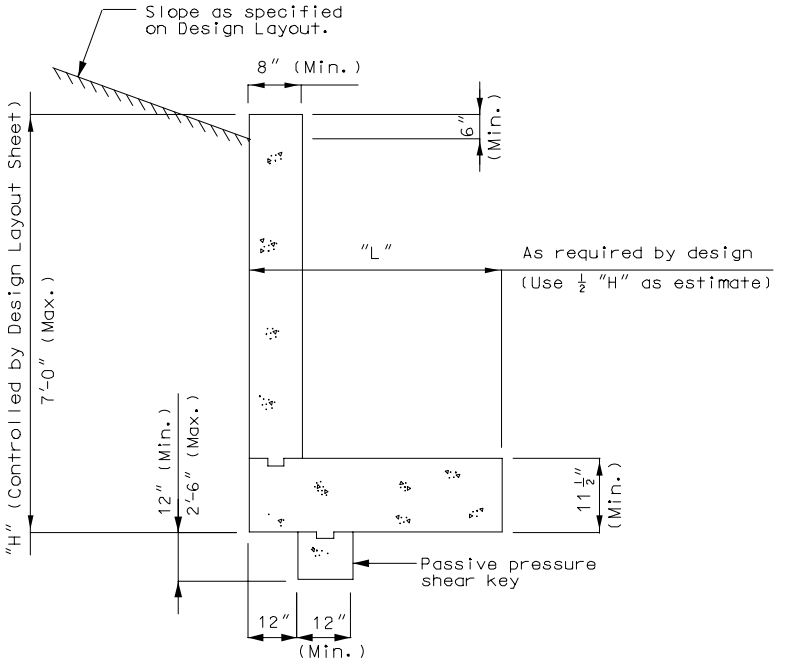

TYPICAL SECTION THRU WALL
(Spread footing)

Counterfort Walls

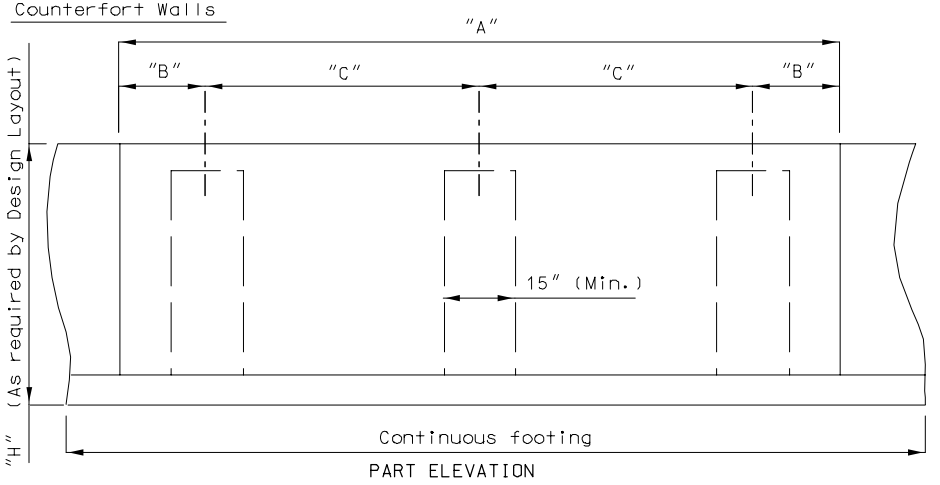

PART ELEVATION

Note: For "A","B","C","D", and "L" see Page: 3.6-6.

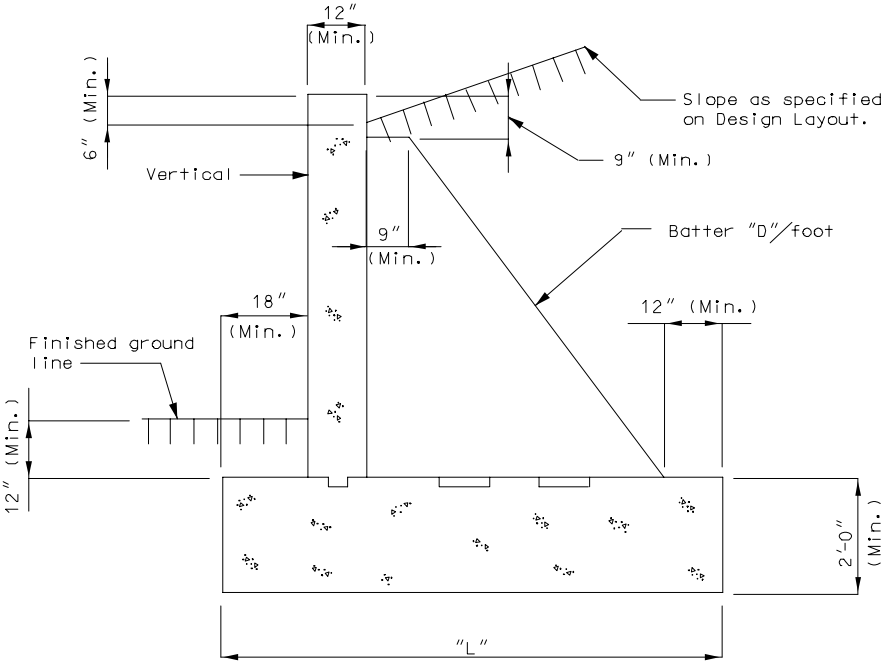

TYPICAL SECTION THRU
WALL & SPREAD FOOTING

Sign-Board Type Counterfort Walls

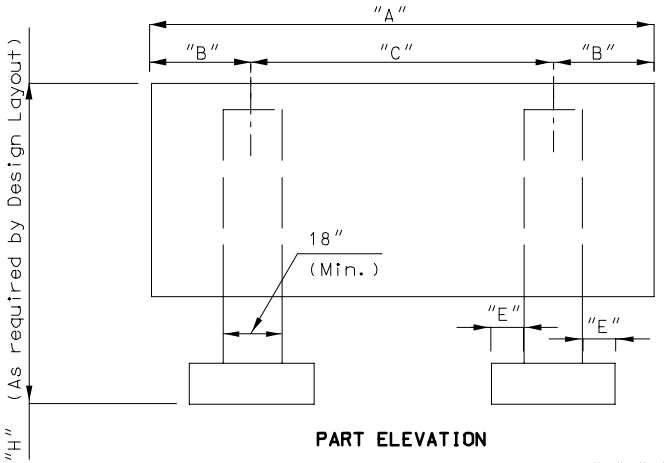

PART ELEVATION

Note: For "A", "B", "C", "D", "E", and "L" see the following sheet.

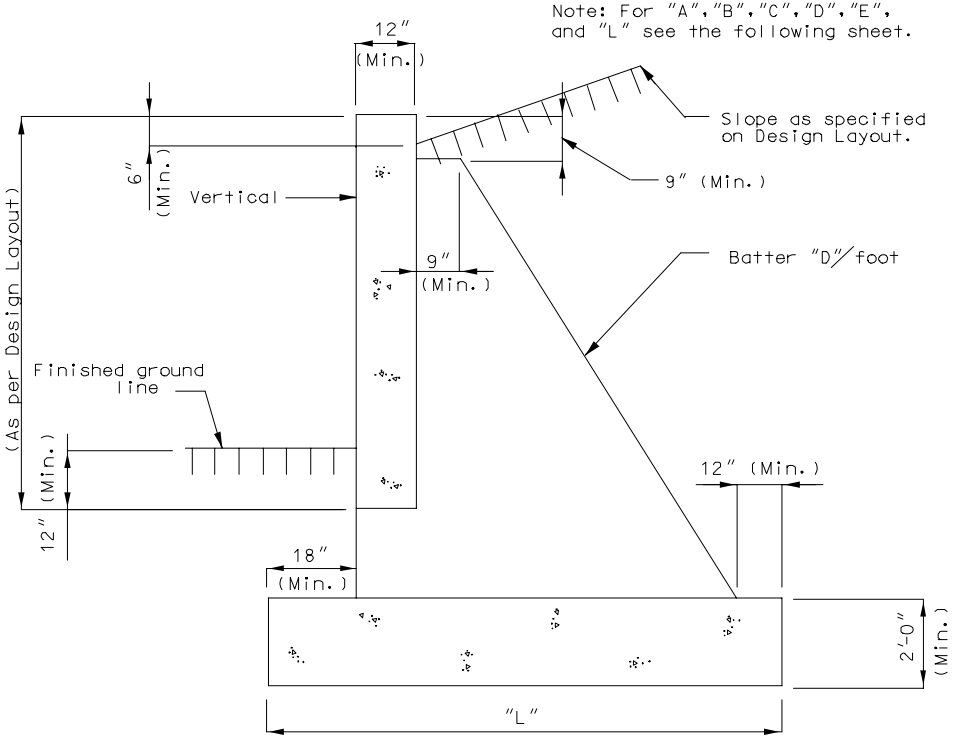

TYPICAL SECTION THRU WALL & SPREAD FOOTING

Dimension "A"

Maximum length = 28'-0".
Each section to be in 4'-0" increments.
(See rustication recess details, Sec. 3.62 Page: 3.8-3)

Dimensions "B" & "C"

As required by the design to balance the negative and positive moments. (See the design assumptions).

Batter "D"

As required to maintain 9" minimum at top of counterfort and 12" minimum edge distance at the top of the footing, between counterfort and footing edge.

Batter to be given in eighth of an inch per foot of counterfort height.

Dimension "E"

(Sign-board type only)

As required to maintain footing pressure within the allowable for existing foundation material.
12" minimum.

Dimension "L"

As required for stability.
As an estimate, use "L" equal to $\frac{1}{2}$ the height of "H".

3.7 Reinforcement

Cast-In-Place Concrete Retaining Walls

Cantilever Walls

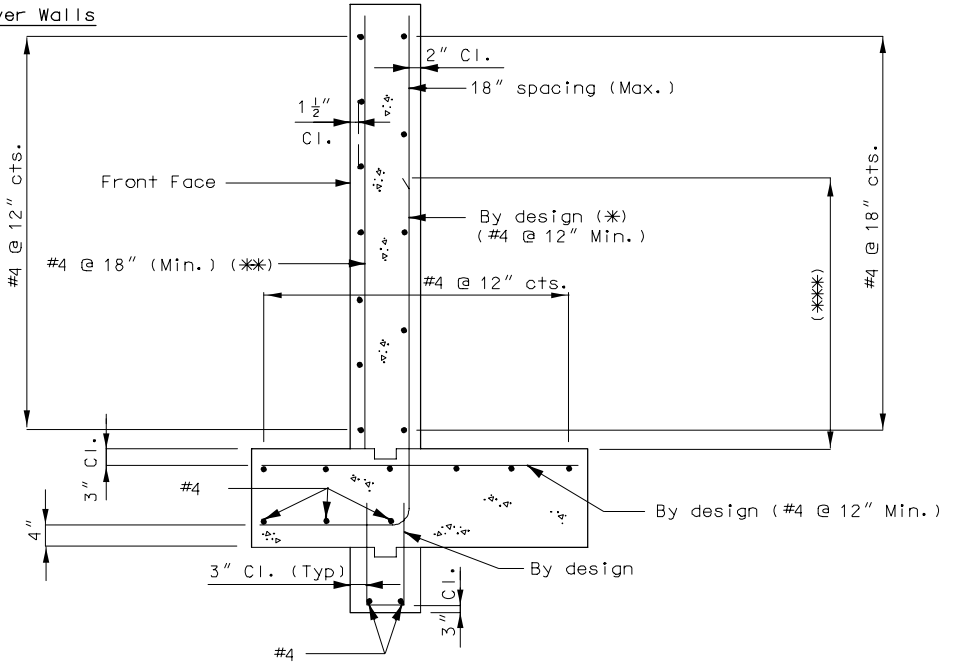

TYPICAL SECTION THRU WALL
(SPREAD FOOTING)

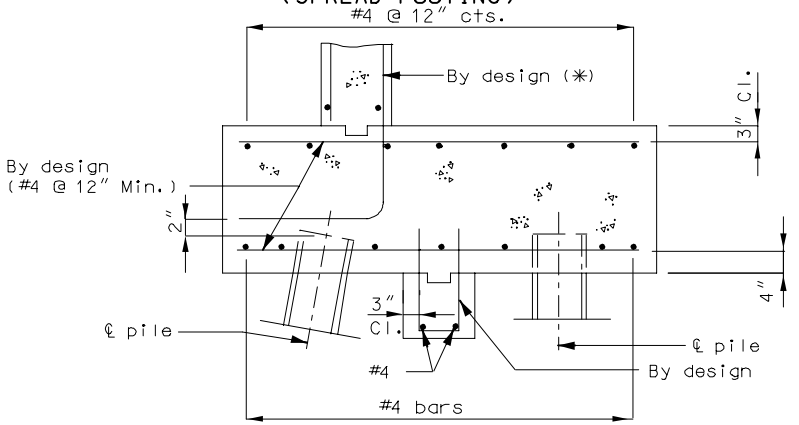

TYPICAL PART SECTION THRU WALL
(PILE FOOTING)
(Friction or bearing piles)

(✳) Alternate long and short bars at equal spaces.

(✳✳) If collision forces are assumed, use #4 @ 12″ cts. Min., and extend at least development length into footing, (See Section 2.4).

(✳✳✳) Theo. cut-off for bending + development length (Wall height over 10′ only).

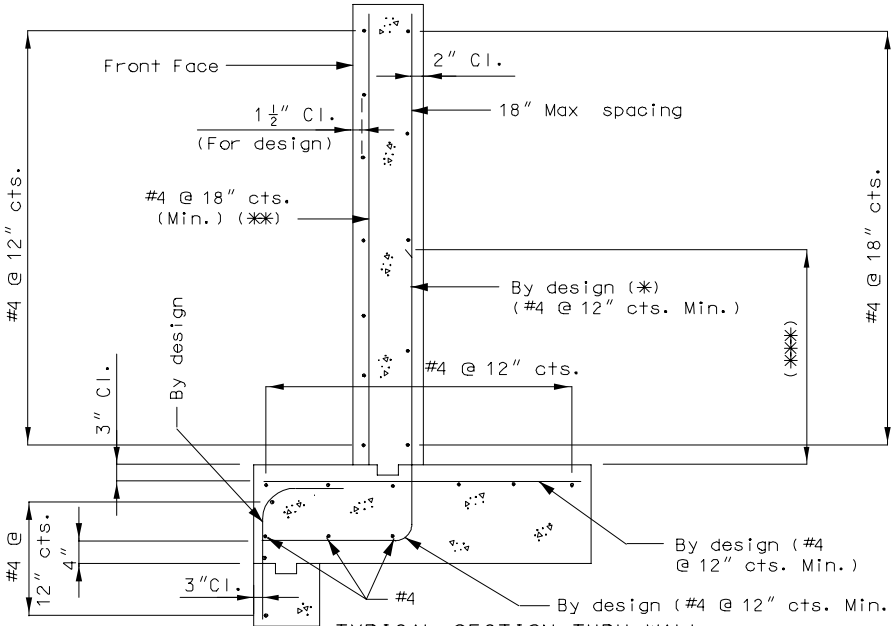

TYPICAL SECTION THRU WALL
(SPREAD FOOTING)

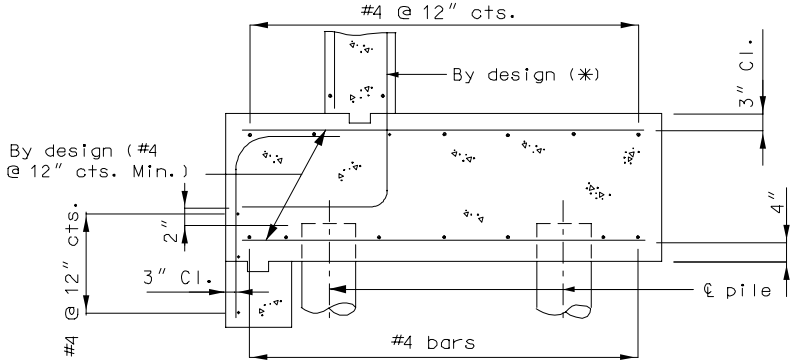

TYPICAL PART SECTION THRU WALL
(PILE FOOTING)

(Concrete pedestal pile)
(Vertical friction or bearing pile) (✱✱✱✱)

(✱) Alternate long and short bars at equal spaces.

(✱✱) If collision forces are assumed, use #4 @ 12″ cts. Min., and extend at least development length into footing, (See Section 2.4).

(✱✱✱) Theo. cut-off for bending + development length (Wall height over 10′ only).

(✱✱✱✱) Due to site constriction

Cantilever Walls - L-Shaped

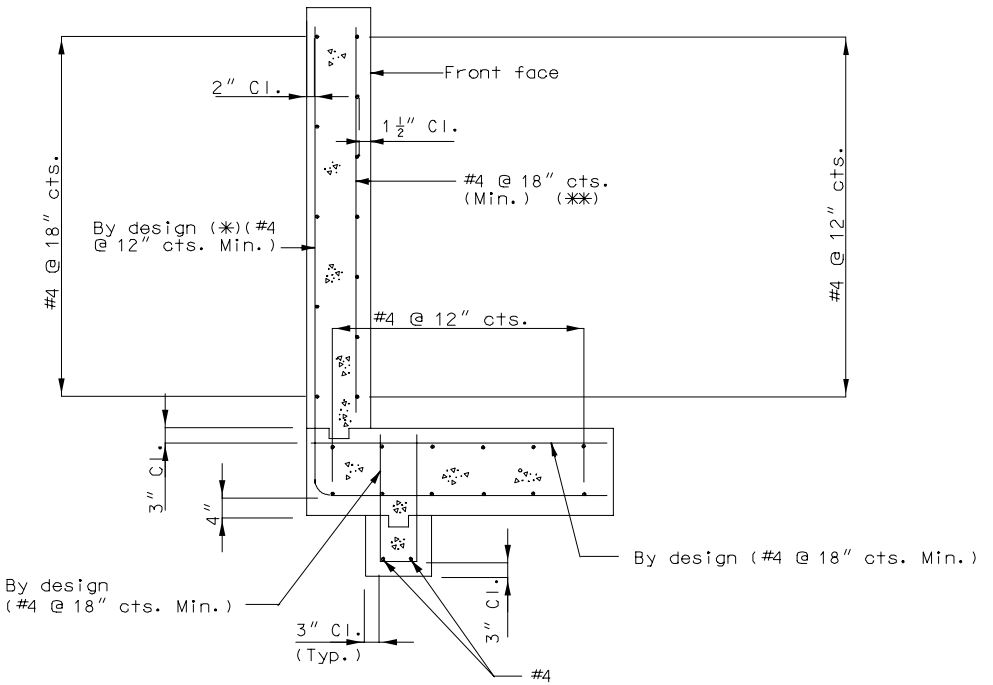

TYPICAL SECTION THRU WALL
(Spread footing)

(✱) Do not splice stress bars in the fill face at top of footing.

(✱✱) If collision forces are assumed, use #4 @ 12" cts., and extend at least development length into footing, (See Section 2.4).

Counterfort Walls

Wall and Stem:

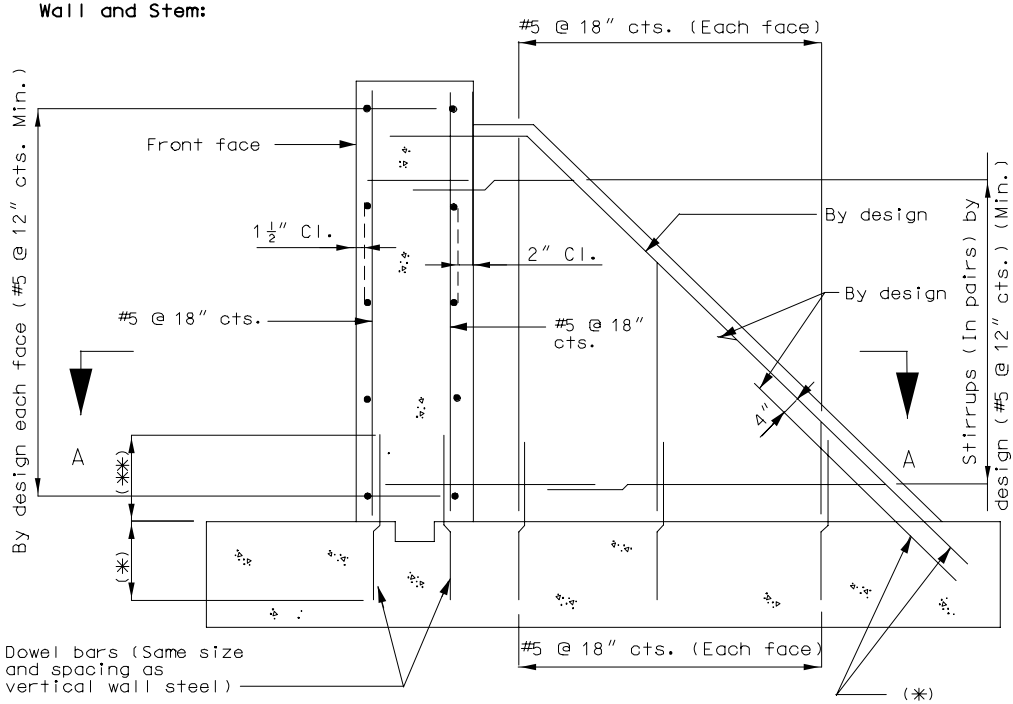

TYPICAL SECTION NEAR COUNTERFORT

(For footing reinforcement, see the following sheet)

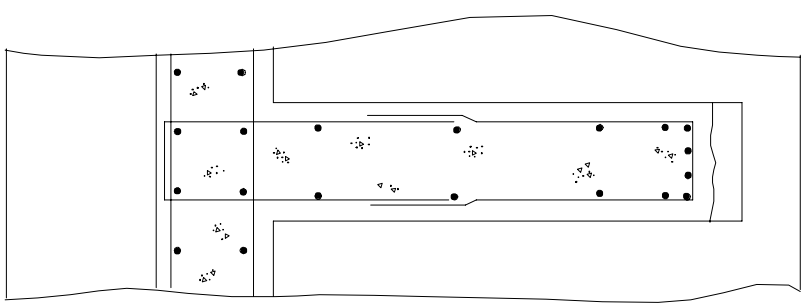

PART PLAN SECTION A-A

(✳) Use development length (other than top bar) or standard hook with (Min.) tension embedment "E" (See Manual Section 2.4).

(✳✳) See lap splices Class B (Other than top bars) (See Manual Section 2.4).

Footing:

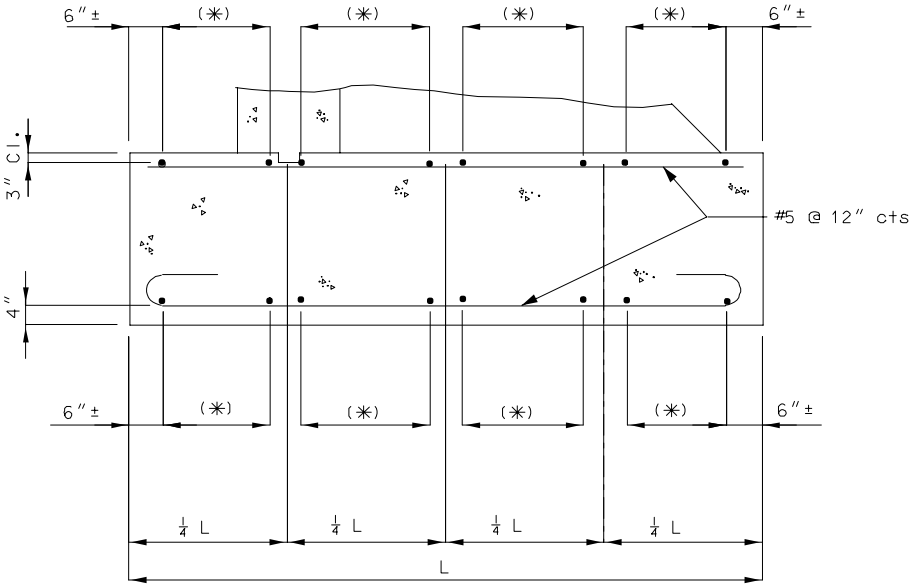

TYPICAL SECTION THRU FOOTING

(✳) By design for loads and footing pressures on section under consideration. (#5 @ 12″ cts. is the minimum.)

Counterfort Walls - Sign-Board Type

Wall and Stem:

Refer to preceding page.

Spread Footing:

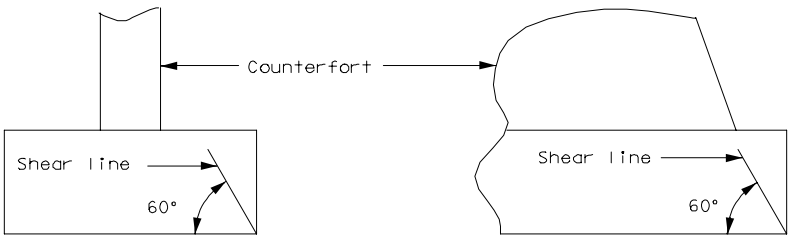

FRONT VIEW SIDE VIEW

If the shear line is within the counterfort projected (longitudinally or transversely) the footing may be considered satisfactory for all conditions. If outside of the counterfort projected, the footing must be analyzed and reinforced for bending and checked for bond stress and for diagonal tension stress.

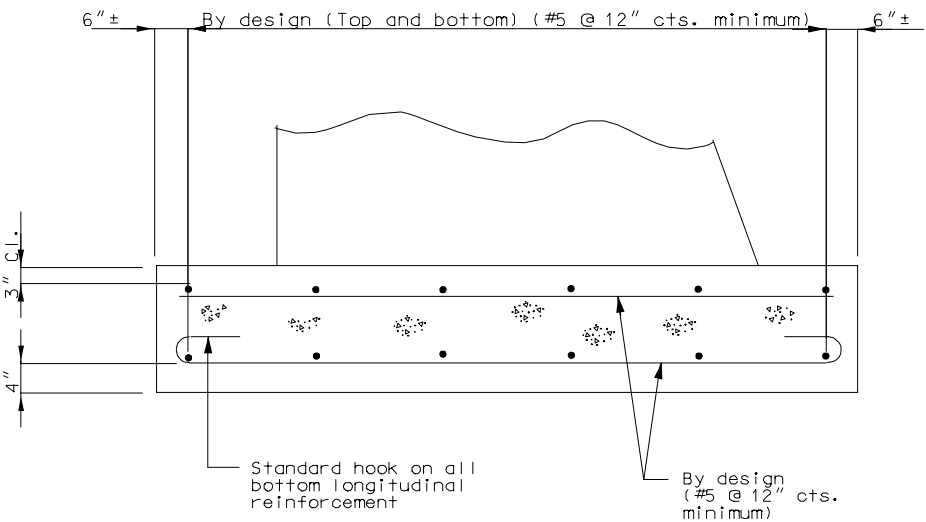

TYPICAL SECTION THRU FOOTING

3.8 Details

Cast-In-Place Concrete Retaining Walls

Non-Keyed Joints

Each section of wall shall be in increments of 4 feet with a maximum length of 28'-0".

Expansion and contraction joints:

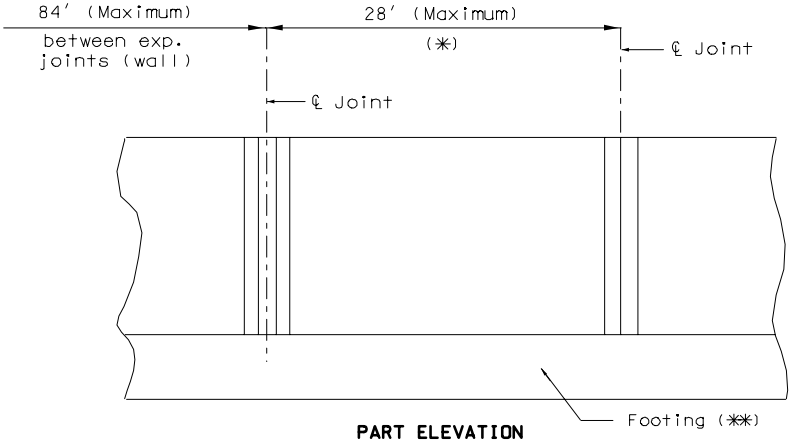

PART ELEVATION

(✳) Between expansion joint and contraction joint or between contraction joint and contraction joint.

(✳✳) Footings are to be constructed continuous if below frost line. Footings at the surface are to match expansion joints in wall.

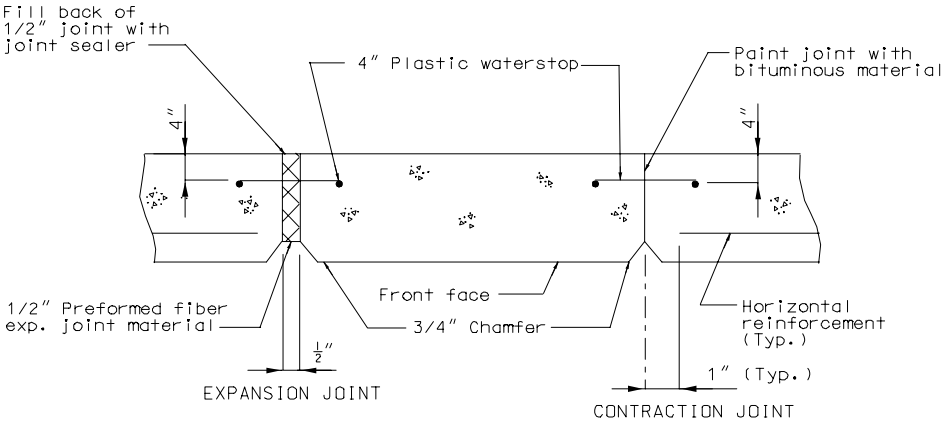

PLAN SECTION THRU WALL

See Manual Section 4.0 for appropriate notes.

Keyed Joints

Expansion and contraction joints:

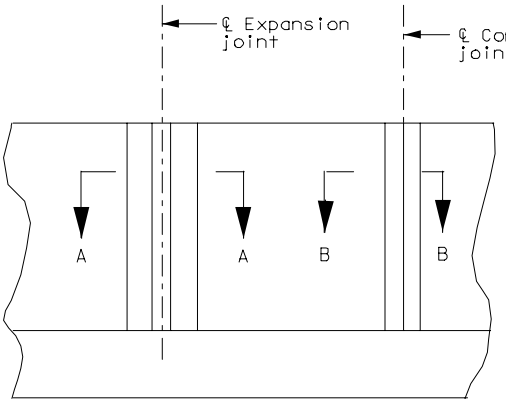

PART ELEVATION

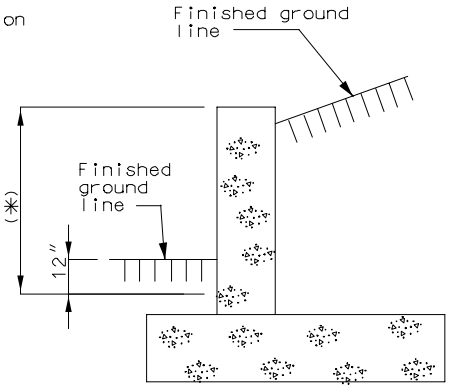

SECTION THRU WALL

(✳) 8′ (Maximum) wall height limit for keyed expansion joint or contraction joint. Use keyed joints if wall heights allow.

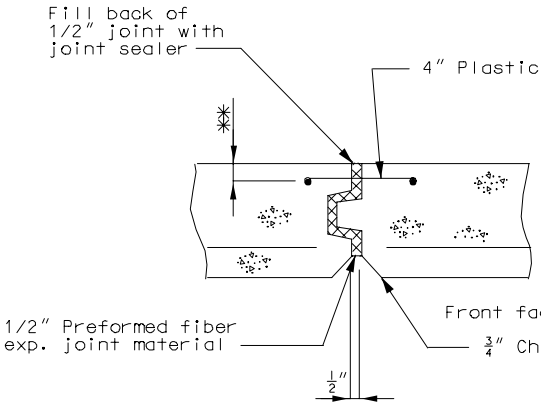

SECTION A-A
(Expansion joint)

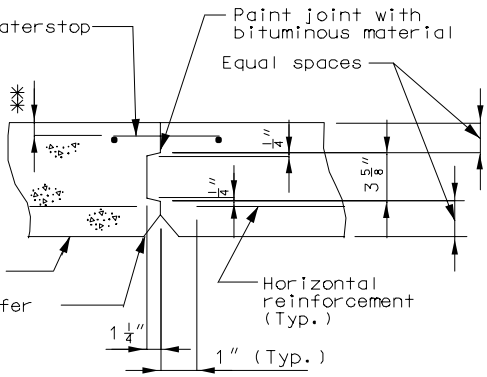

SECTION B-B
(Contraction joint)

✳✳ Use 4″ (Max.) adjust for "L" walls or minimum stem thickness (2″ min.).

See Manual Section 4.0 for appropriate notes.

Rustication Recess

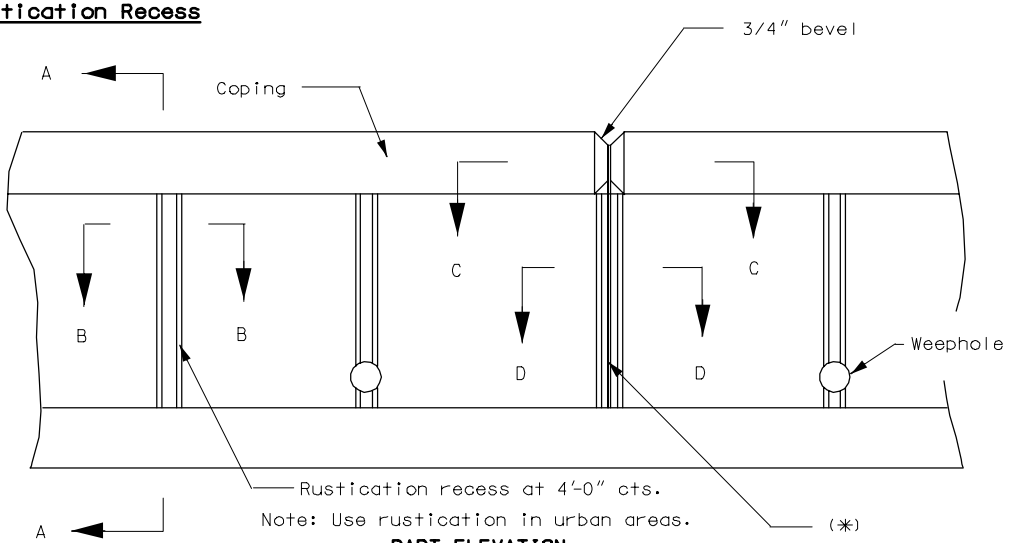

PART ELEVATION

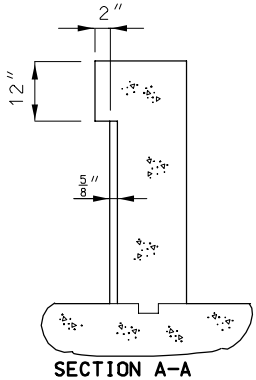

SECTION A-A

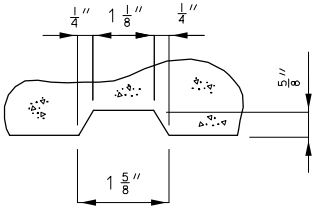

SECTION B-B

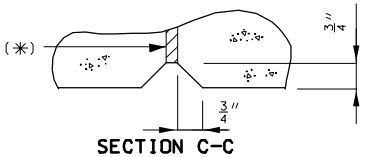

SECTION C-C

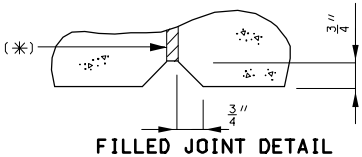

FILLED JOINT DETAIL

(For wall where rustication is not required)

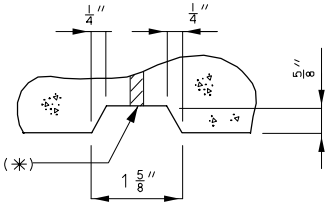

SECTION D-D

(✳) 1/2" Preformed fiber expansion joint material shall be in accordance with Standard Specifications 1057.

Drains

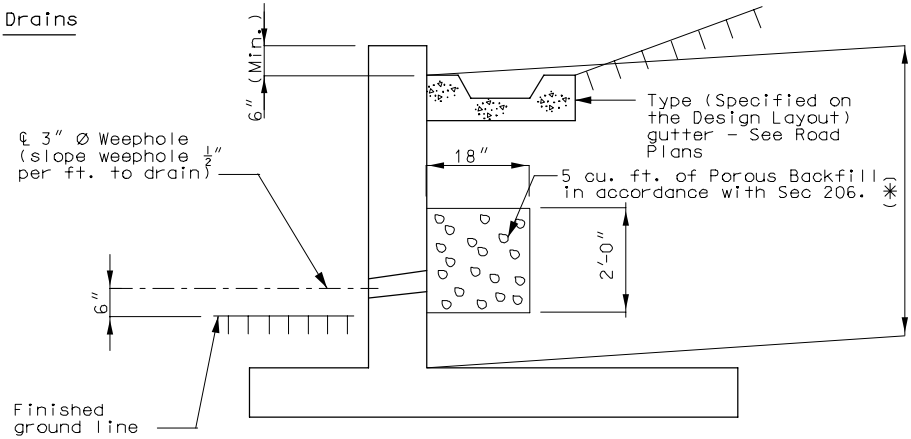

FRENCH DRAIN

(✳) Limits of dampproofing (Use only when specified on the Design Layout.)

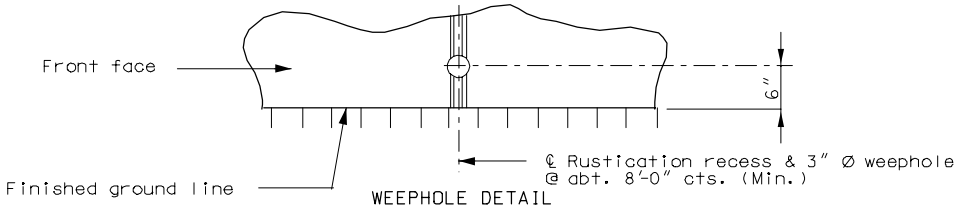

WEEPHOLE DETAIL

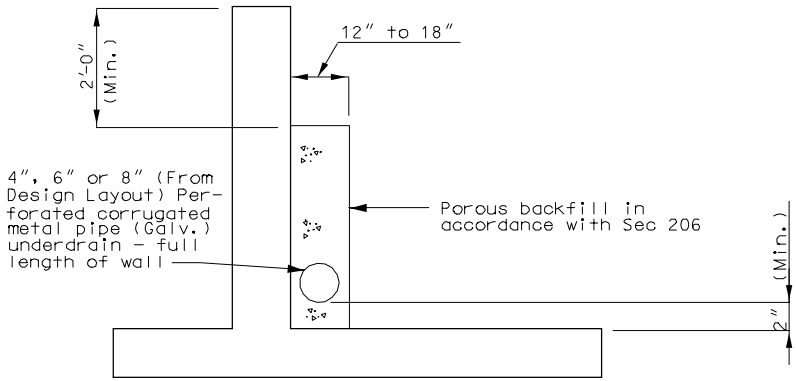

PCMP UNDERDRAIN

Note: French drains shall be used on all retaining walls, unless otherwise specified on the Design Layout.

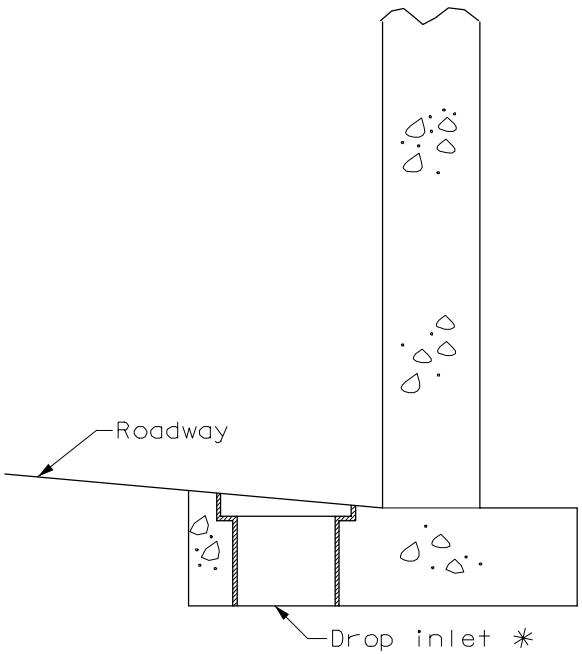

✳ When drop inlets go through the footings of retaining walls, use the following note:

Note: Contractor may shift and or cut reinforcement in field where necessary to clear drains. Place $\frac{1}{2}''$ joint filler around drop inlet as bond breaker.

Construction Joint Keys

Cantilever Walls:

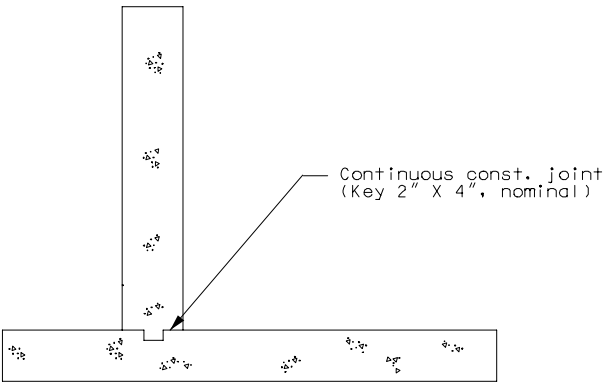

Counterfort Walls:

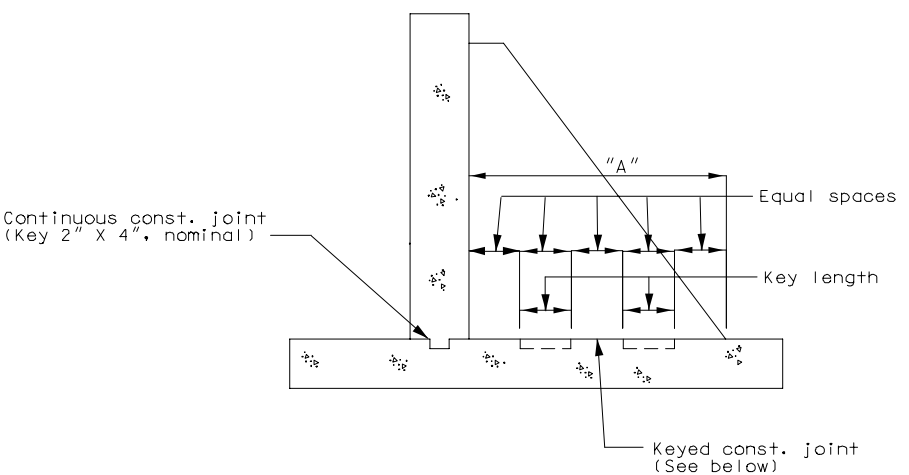

Key length: Divide the length "A" into an odd number of spaces of equal lengths. Each space shall not exceed 24 inches in length. Use as few spaces as possible with the minimum number of spaces equal to three (or one (1) key).

Key width = Counterfort width/3 (to the nearest inch)

Key depth = 2" (Nominal)

Sign-Board Walls:

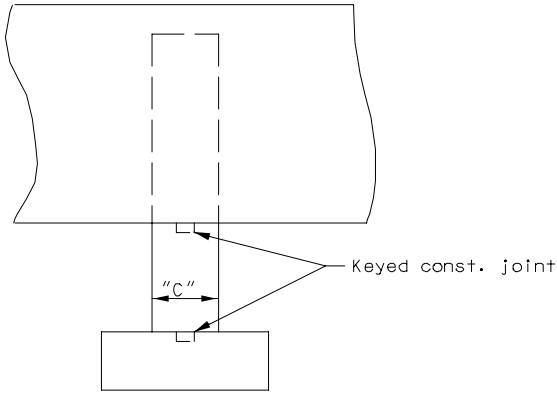

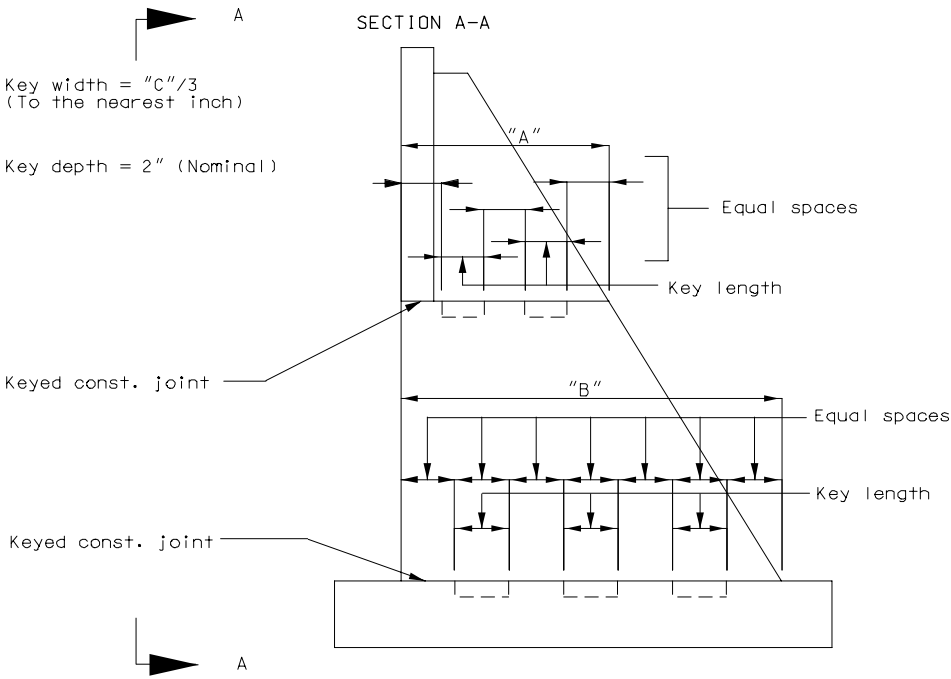

Key length = divide length "A" or "B" into an odd number of spaces of equal lengths. Each space shall not exceed 24" in length. Use as few spaces as possible with the minimum number of spaces equal to three (or one (1) key).