Missouri Department of Transportation

Bridge Division

Bridge Design Manual

Section 3.56

Revised 03/21/2003

Click Here for Index

Index

3.56.1 Superstructure

1.1 General Girder and Slab Design (11 sheets)
1.2 24'-10" Roadway - Girder Length, Section Properties (13 sheets)
1.3 26'-10" Roadway - Girder Length, Section Properties (13 sheets)
1.4 32'-10" Roadway - Girder Length, Section Properties (13 sheets)
1.5 36'-10" Roadway - Girder Length, Section Properties (13 sheets)
1.6 38'-10" Roadway - Girder Length, Section Properties (13 sheets)
1.7 42'-10" Roadway - Girder Length, Section Properties (13 sheets)

3.56.2 Reinforcement

2.1 24'-10" Roadway - Slab Reinforcement (3 sheets)
2.2 26'-10" Roadway - Slab Reinforcement (3 sheets)
2.3 32'-10" Roadway - Slab Reinforcement (3 sheets)
2.4 36'-10" Roadway - Slab Reinforcement (3 sheets)
2.5 38'-10" Roadway - Slab Reinforcement (3 sheets)
2.6 42'-10" Roadway - Slab Reinforcement (3 sheets)

3.56.3 End Bent

3.1 Wheel Line Reactions
3.2 End Bent Reinforcement (2 sheets)
3.3 Diaphragm Reinforcement

3.56.4 Intermediate Bent

4.1 Wheel Line Reactions
4.2 Diaphragm Reinforcement

3.56.5 End Bent and Intermediate Bent Details

5.1 Diaphragm Tie Details (2 sheets)
5.2 Vent Holes
5.3 Diaphragm Reinforcement

3.56.6 Miscellaneous Details

6.1 Details of Optional Const. Jt.
6.2 Dowel Bars
6.3 Details for Curved Structures

GENERAL GIRDER AND SLAB DESIGN

Superstructure

The cast-in-place slab is designed to carry only the live load of the bridge. One layer of steel is used in each direction of the cast-in-place slab with 1″ clearance from bottom of slab. Reinforcing bars are fy = 60 ksi. A 1″ integral wearing surface is deducted from effective slab depth for design.

The double tee girder flange is designed to carry the load of the cast-in-place slab, the flange weight and a 50 lb./sq. ft. construction dead load. (or a 300 lb. concentrated construction load per OSHA).

When determining the section properties of the double tee girder the center of gravity is based upon the total area (excluding corner fillets) of the entire exterior of interior girder and not on the individual stems. Moment of inertia and dead loads to each stem are figured to the center of the flange between the stems. The non-composite dead load of the external double tee girder is divided according to the following sketch.

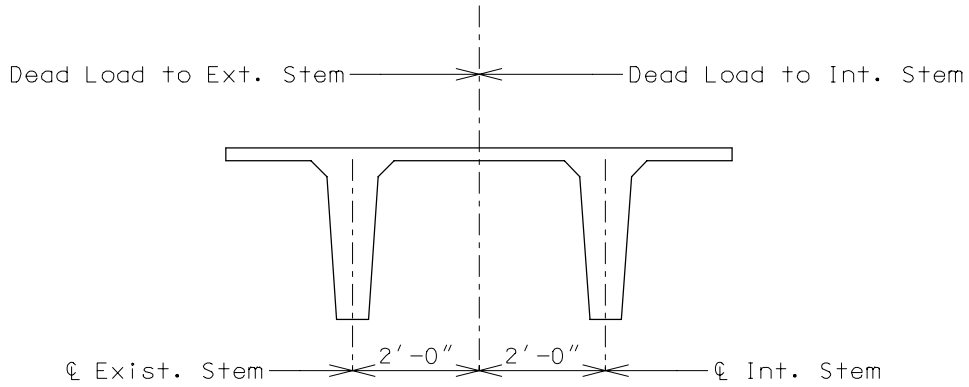

The non-composite dead load of the interior double tee girder is divided evenly to each stem. A 9 lb./lin ft. dead load is added to the non-composite dead load of each stem for haunching. The non-composite dead load of C.I.P. slab, girder and haunch are based on simple spans from ℄ to ℄ Bearings.

The composite dead load of the safety barrier is divided 75% to the exterior stem of the exterior girder and 25% to the interior stem of the exterior girder. No dead load due to the barrier curb is added to the interior girder. The composite dead load for future wearing surface is 35 lb./sq.ft. or 3″ of material. The composite dead load of safety barrier curb, and future wearing surface are based on continuous, composite spans from ℄ to ℄ Bearings.

GENERAL GIRDER AND SLAB DESIGN (CONT.)

Superstructure

The live load design is based on HS20 or HS20 Military. The live load distribution factors are figured separate for exterior and interior Double Tee Girders. The assumption, that if the bridge is widened in the future the exterior girder then becomes an interior girder, does not control the design of exterior girder in the present Double Tee configurations. Live load distribution factors are equal to the average span/6 to determine wheel line reactions.

Composite sections are adjusted for the difference in modulus of elasticity of slab and girder by multiplying by the factor (Eslab/Egirder). (✳) A 1″ integral wearing surface is deducted for effective slab design.

Negative moment reinforcement is based on the amount required for the entire roadway width and not the amount required for each stem. The design is based on two equal spans using the BR200 program. The continuous span lengths are based on the distance from the ℄ Bearing at End Bents to the ℄ Interior Bent. The area of longitudinal reinforcing steel at the centerline of the intermediate bent is determined on the basis of a cracked section and 24,000 psi allowable stress. The area of reinforcing bars is provided by adding bars between the normal longitudinal bars.

Continuity is obtained at intermediate supports by extending and bending all strands to form interlocking right angle hooks and pouring a concrete diaphragm monolithic with deck slab encasing the prestressed girders with the flange cut back at diaphragm.

Camber is based on simple spans. A transformed moment of inertia is figured for the total exterior or interior double tee girder since the total girder is cambered at the same rate.

Reactions used for bearing design are based on simple spans and are taken from BR202 computer program.

Reactions (✳) used for the design of end bents and interior bents are calculated based upon lane loading or truck loading using two equal continuous span structures from the BR200 computer program.

Stirrup design follows design computations shown in Section 3.55 page 1.14-2 and are based upon the area of steel required by BR200 computer program.

Maximum horizontal curvature for Double-Tee structures is 3°. Outside flange edge of exterior girders on curved bridges is to be curved.

(✳) Calculations are made by computer program.

GENERAL GIRDER AND SLAB DESIGN (CONT.)

Superstructure

TABLE OF BEARING PADS, STIRRUPS AND TEMPORARY STRESS BARS

Prestressed Concrete Double Tee Girders	Type 16	Type 22	Type 30
Bearing Size (LxWxT) (60 Hardness) Integral End Bents	$4\frac{1}{2}''$ x $7''$x$\frac{1}{4}''$	$6\frac{1}{4}''$ x $6\frac{1}{4}''$x$\frac{1}{4}''$	$9''$ x $5\frac{1}{4}''$ x$\frac{1}{4}''$
(✱✱✱) Laminated Neoprene Brg. Pads - Intermediate Bents	$5\frac{1}{2}''$ x $7''$ x$\frac{5}{8}''$	$7''$ x $6\frac{1}{4}''$ x$\frac{5}{8}''$	$10\frac{1}{2}''$ x $5\frac{1}{4}''$ x$\frac{5}{8}''$
Stirrups for Shear	#4 at 12″	#4 at 18″	#4 at 21″
Additional Bars for Temporary Stresses at Top of Girder Section	2 - #5	2 - #5	2 - #5
Additional Bars for Each End of Stems	2 - #4 (✱)	2 - #4 (✱✱)	2 - #4 (✱✱)

(✱) Place at 4″ cts. between the first two regular stirrups in the end of the stems.

(✱✱) Place 4-#4 at equal spacing in the first space between the regular stirrups in the end of the stems. (Bar spacing not to be less than 3″ on center.)

(✱✱✱) Bearing Pads are designed for maximum allowable compressive stress and should be checked for minimum Dead Load requirements.

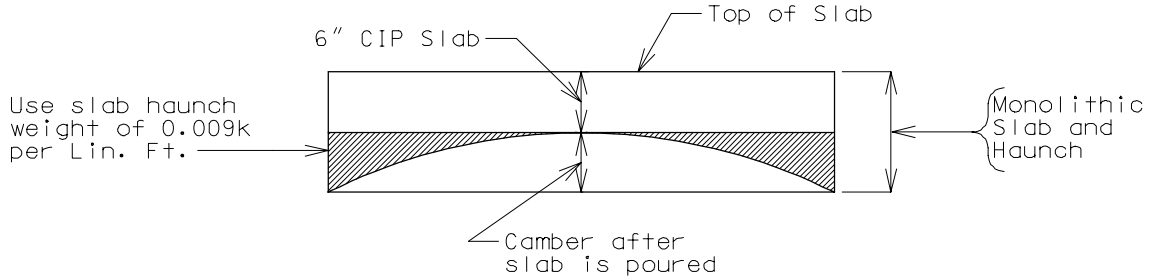

DETAIL OF HAUNCH

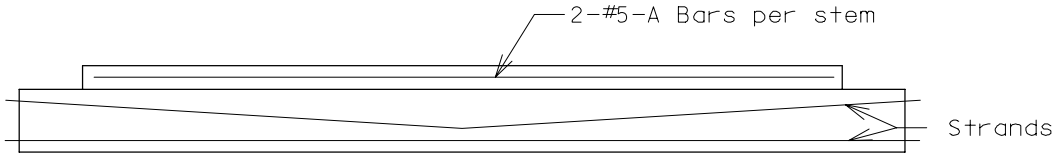

Use a single Tie-Down Point for the Draped Strands.

DRAPED STRANDS

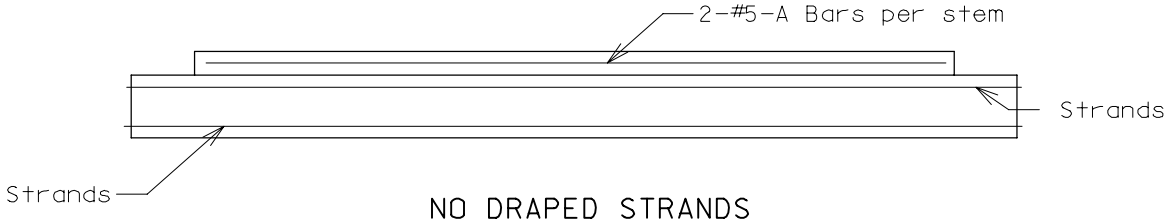

NO DRAPED STRANDS

Note: Girders with no draped strands require one strand placed at top of girder (Inside face of girder). These strands shall be analyzed until new tables are issued.

GENERAL GIRDER AND SLAB DESIGN
PRESTRESS LOSS COMPUTATIONS

Superstructure

f'c = 5,000 psi fc = 0.4(4,000) = 1,6000 psi Est.
f'ci = 4,000 psi
Grade 270 low relaxation strands
fs = 270 ksi
fsi = 270 x 0.75 = 202.5 ksi

$$\left[\overset{(SH)}{6{,}000} + \overset{(ESt)}{\frac{Es}{Eci} fc} + \overset{(CRc)}{5fc} + \overset{(CRs)(*)}{(5{,}000 - 0.08ESt - 0.04\ (SH + CRc))} \right]$$

SH =	6,000
ESt = $\frac{29{,}000}{3{,}834}$ (1,600) =	12,102
CRc = 5(1,600) =	8,000
CRs = 5,000 - 0.08 (12,102) - 0.04 (6,000 + 8,000) =	3,471
Total Loss	29,573 psi
Time dependent	29.573 ksi

SH = Shrinkage
ESt = Elastic Strain
CRc = Concrete Creep
CRs = Steel Creep

(*) CRs loss modified to approx. ACI loss formula

$$\text{Percent} = \frac{\text{Loss}}{\text{fsi}} = \frac{29.573}{202.5} = 14.6\% \text{ Total Loss}$$

$$Li = 1 - \sqrt{1 - Lt/202.5}$$

$$Li = 1 - \sqrt{1 - 29.57/202.5}$$

Li = 7.6% Initial Loss

Total time dependent losses for double tee prestress girders is 29.57 ksi.
Use 7.6% for initial loss and 7.6% for final loss for design.

202.5 x 0.076 = 15.39 ksi 202.5 - 15.39 = 187.11 ksi
187.11 x 0.076 = 14.22 ksi 15.39 + 14.22 = 29.61 ksi ≈ 29.57 ksi

GENERAL GIRDER AND SLAB DESIGN
PRESTRESS CAMBER

Superstructure

References: Computer program BZ139B

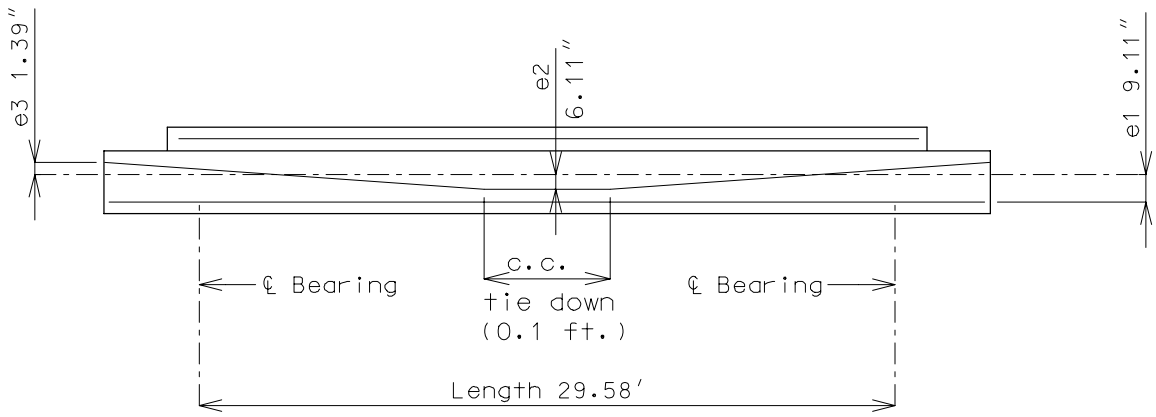

Type 16 Strand Seq. 162 Span 31.0 Roadway 24'-10"

I = 7796. in.^{4}
(Non-transformed)
Beam wt. = 0.254 k/ft.

} Resist uplift before beam is set on bent

I = 8193.6 in.^{4}
(Transformed)
Slab wt. = 0.268 k/ft

$$\frac{6'' \times 41.5 \times 0.15}{144} = 0.259$$

haunch 0.009

0.268

Diaph. wt. = 0

} Use after beam is in place

GENERAL GIRDER AND SLAB DESIGN
PRESTRESS CAMBER (CONT.)

Creep Multiplication factor for deflection

$$\text{Mult. Factor} = \left[1 + (1 - e^{-\varnothing})\right] = F_{CRP}$$

$e = 2.7183, \quad \varnothing = \text{Ecreep} \times \text{Ef}$

$Ei = 60{,}625 \sqrt{f'ci}$
$f'ci = 4{,}000$ psi

$Ei = 3.834 \times 10^6$

$Ef = 60{,}625 \sqrt{f'cf}$
$Fcf = 5{,}000$ psi

$Ef = 4.287 \times 10^6$

$\epsilon creep = (\epsilon\ 20yr.) \times 1.8 \times (Fvol\text{-}surf) \times 0.4$
(0.4) Use 40% based on 28 day creep at erection
ϵ 20yr from Figure 5 PCA Design P/S Girders
ϵ 20yr = 0.37 using Ei
Fvol-surf from figure 7 PCA Design P/S Girders

$$Fvol\text{-}surf = 1.42 \quad \text{Type 16} \quad \frac{\text{Area}}{\text{Perimeter}} = \frac{243.75}{117.5} = 2.07 \text{ in.}$$

$$\epsilon creep = 0.37 \times 1.8 \times 1.42 \times 0.4 = 0.378 \times 10^{-6}$$
$$\varnothing = 4.287 \times 0.378 = 1.62$$

$$Fcrp = \left[1 + (1 - e^{-\varnothing})\right]$$
$$Fcrp = 1.80 = \left[1 + (1 - 2.7183^{-1.62})\right]$$

Use 1.80 creep multiplication factor for all double tees.

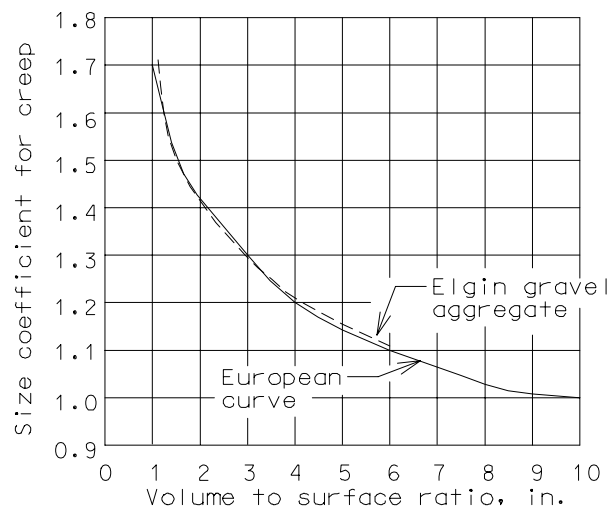

FIG. 7. CREEP VS. VOLUME-TO-SURFACE RATIO

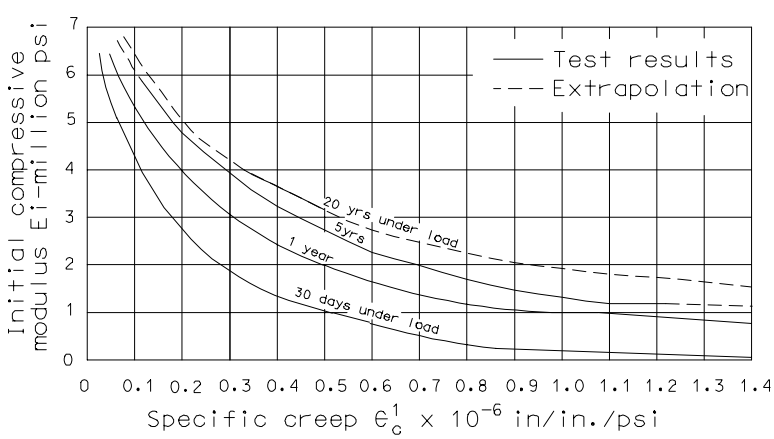

FIG. 5. PREDICTION OF BASIC CREEP FROM ELASTIC MODULUS

GENERAL GIRDER AND SLAB DESIGN
PRESTRESS CAMBER (CONT.)

Superstructure

These formulae are used to determine the following:

Camber due to initial strand stress (inch)
Deflection due beam weight stress (inch)
Camber L/4 due strands, beam weight and 28 day creep (inch)
Deflection due to slab weight
Camber centerline due strands, beam weight, 28 day creep, slab and diaphragm (inch)

Formulas used: Prestress strand camber

$$\uparrow\Delta = 144 \times 10^3 \times \left[\frac{F01\ (e_1)\ (L^2)}{8EI_{NON}} + \frac{F02\ (e_2 + e_3)}{EI_{NON}}\left(\frac{L^2}{8} - \frac{a^2}{6}\right) - \frac{F02(e_3)(L^2)}{8EI_{NON}}\right]$$

$$(E = 0.060625\sqrt{F'ci} \times 10^6)\ \text{psi} \qquad (a = \left[L - (\text{℄ to ℄ tie downs})\right] \div 2)\ \text{ft.}$$

Beam weight camber

$$\downarrow\Delta_2 = \frac{5W_B\ (L^4)}{384EI_{NON}}\ (1728 \times 10^3)$$

$$(E = 0.060625\sqrt{F'ci} \times 10^6)$$

Slab weight camber

$$\downarrow\Delta_S = \left[\frac{5W_S\ (L^4)}{384EI_{TRN}} + \frac{P(L^3)}{38EI_{TRN}}\right](1728 \times 10^3)$$

$$(E = 0.060625\sqrt{F'cf} \times 10^6)$$

$$\text{Total } \Delta \text{ at ℄} = (\Delta_1 + \Delta_2)\ F_{CRP} + \Delta_s$$

Δ @ 1/4 = 0.7125 (Δ @ ℄)
Δ @ 0.1 = 0.314 (Δ @ ℄)
Δ @ 0.2 = 0.593 (Δ @ ℄)
Δ @ 0.3 = 0.813 (Δ @ ℄)
Δ @ 0.4 = 0.952 (Δ @ ℄)

Force straights strands
$F01 = (\ \#\ \text{straight strands}\ ) \times \left[F0 - (L_{AVG} \times A_{STR})\right]$ kips

Force draped strands
$F02 = (\ \#\ \text{draped strands}\ ) \times \left[F0 - (L_{AVG} \times A_{STR})\right]$ kips

$F0 = 270 \times R_{MAX} \times A_{STR}$

A_{STR} = Area of strands (Sq in)

FCT-F_{CRP} = Creep factor = $1 + (1 - e^{-\varnothing})$

MAX FORCE-R_{MAX} = Max prestress force ratio stress REL 0.7 LOWLAX 0.75

E1D-e_1 = Dist. centroid beam to centroid straight strands (in)

E1D-e_2 = Dist. centroid beam to low centroid draped at center of beam (in)

E1D-e_3 = Dist. centroid beam to up centroid draped at end beam (in)

LGT-L = Length (ft.) (℄ Bearing to ℄ Bearing)

I = Moment of inertia (in.^{4})

DIA-P = concentrated load (kips) Diaphragm

BMWT-W = Uniform beam load (kips/ft.)

SLB-W = Uniform slab load (kips/ft.)

L_{AVG} = Average loss initial and final = $[(2\ R_{INIT} - R_{INIT}^2) \times 0.5] \times 270 \times R_{MAX}$

INIT/LOSS-R_{INIT} = Initial loss ratio (0.10) 5000 old, (0.1075) 5000 New, (0.08) 5000 LOW LAX.

GENERAL GIRDER AND SLAB DESIGN
PRESTRESS CAMBER (CONT.)

Superstructure

Camber

Example Low Relax

$$F0 = 270 \times 0.75 \times 0.153 = 31.0 \text{ kips}$$

$$Lavg = [(2(0.076) - (0.076)^2)0.5] \times 202.5$$

$$Lavg = 14.8 \text{ ksi}$$

or

$$Lavg = Lt/2 = 29.57/2 = 14.78 \text{ ksi}$$

$$a = (29.58 - 0.1)/2 = 14.74 \text{ ft.}$$

$$F01 = 4 \times [30.1 - (14.8 \times 0.153)] = 111.34 \text{ kips}$$

$$F02 = 2 \times [30.1 - (14.8 \times 0.153)] = 55.67 \text{ kips}$$

$$\uparrow \Delta_1 = 144 \times \left[\frac{111.3\ (9.11)\ (29.58)^2}{8\ (3834)\ (7796)} + \frac{55.67\ (6.11 + 1.39)}{(3834)\ (7796)}\left(\frac{29.58^2}{8} - \frac{14.74^2}{6}\right) - \frac{55.67\ (1.39)\ (29.58)^2}{8\ (3834)\ (7796)}\right]$$

$$\Delta_1 = 144 \times [0.00371 + 0.00102 - 0.000283]$$

$$\uparrow \Delta_1 = 0.64 \text{ in.}$$

$$\downarrow \Delta_2 = \frac{5\ (0.254)\ (29.58)^4}{384\ (3834)\ (7796)}\ (1728)$$

$$\downarrow \Delta_2 = 0.146 \text{ in.}$$

$$\downarrow \Delta_s = \left[\frac{5\ (0.268)\ (29.58)^4}{384\ (4287)\ (8193.6)}\right]\ (1728)$$

$$\downarrow \Delta_s = 0.131 \text{ in.}$$

$$\Delta_{TOT} = (0.64 - 0.146)\ 1.80 - 0.1310$$

$$\Delta_{TOT} = 0.76 \text{ in. or } 3/4 \text{ inch}$$

$$\Delta@1/4 = 0.76\ (0.7125) = 0.54 \text{ or } 9/16 \text{ inch}$$

GENERAL GIRDER AND SLAB DESIGN
INITIAL PRESTRESS STRAND FORCE

Total No. of Strands Per Stem	Total P/S Force Kips Per Stem
1	31.0
2	62.0
3	93.0
4	124.0
5	155.0
6	186.0
7	217.0
8	248.0
9	279.0
10	310.0

Note: Shown in the table are the values of initial prestress force based on 31.0 kips/strand

Use low relaxation strands (1/2 round As = 0.153 sq. in.) 0.75 jacking force with Fu = 270 ksi.

270 X 0.75 = 202.5 ksi
202.5 X 0.153 = 30.98 kips/strand

Use 31.0 kips

f'c = 5,000 psi
f'ci = 4,000 psi

Concrete tension before losses $7.5\sqrt{f'ci}$

Concrete tension after losses $6\sqrt{f'c}$

Concrete compression before losses 0.6f'ci
Concrete compression after losses 0.4f'c

GENERAL GIRDER AND SLAB DESIGN

Superstructure

GIRDER DIMENSIONS

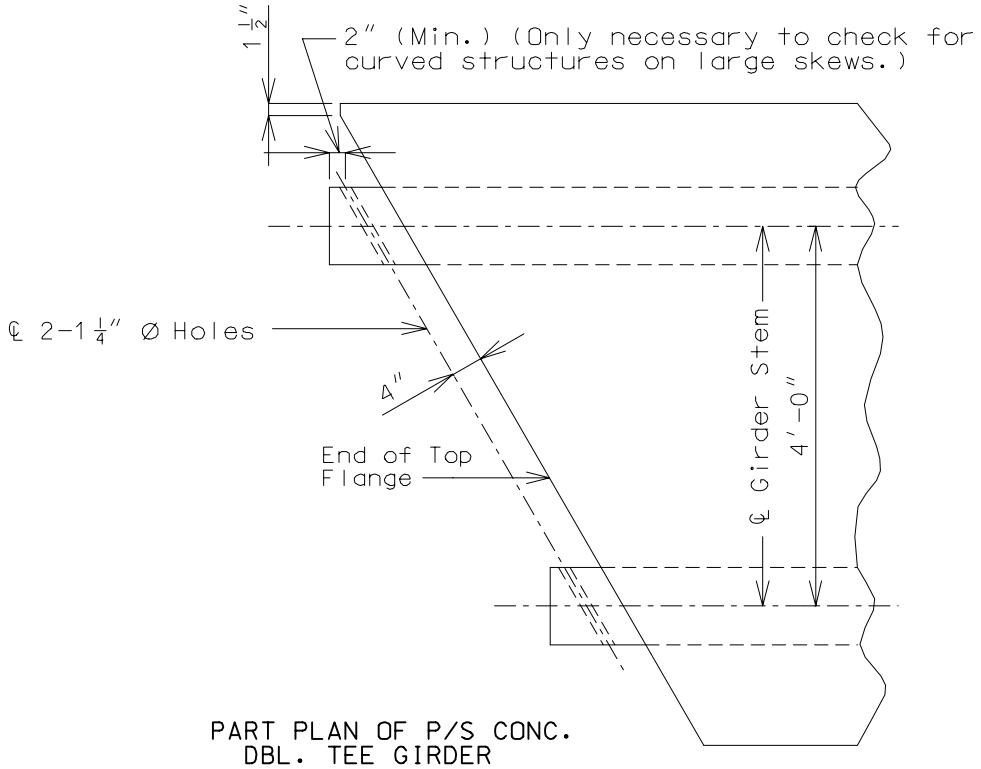

PART PLAN OF P/S CONC. DBL. TEE GIRDER

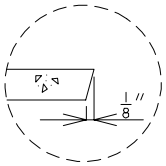

DETAIL "A"

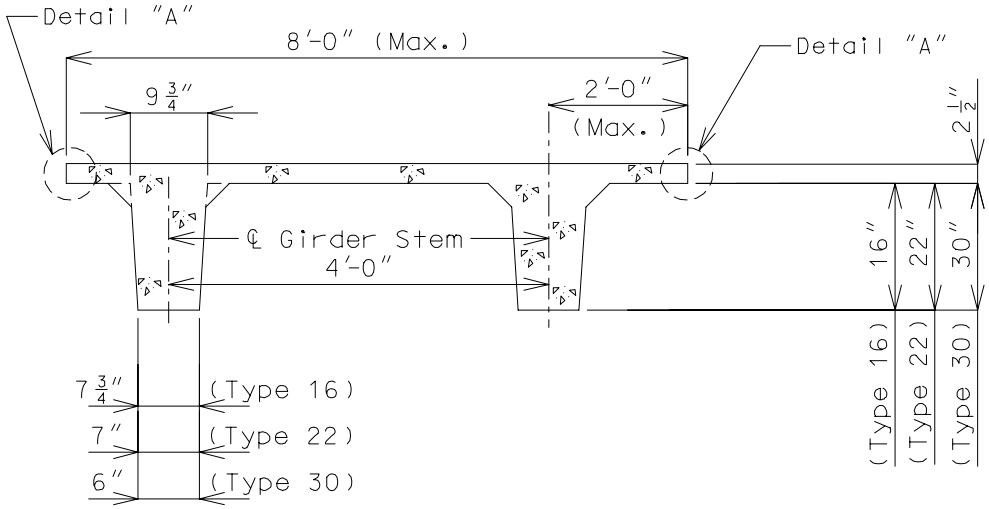

SECTION THRU P/S CONC. DBL. TEE GIRDER

GIRDER REINFORCEMENT

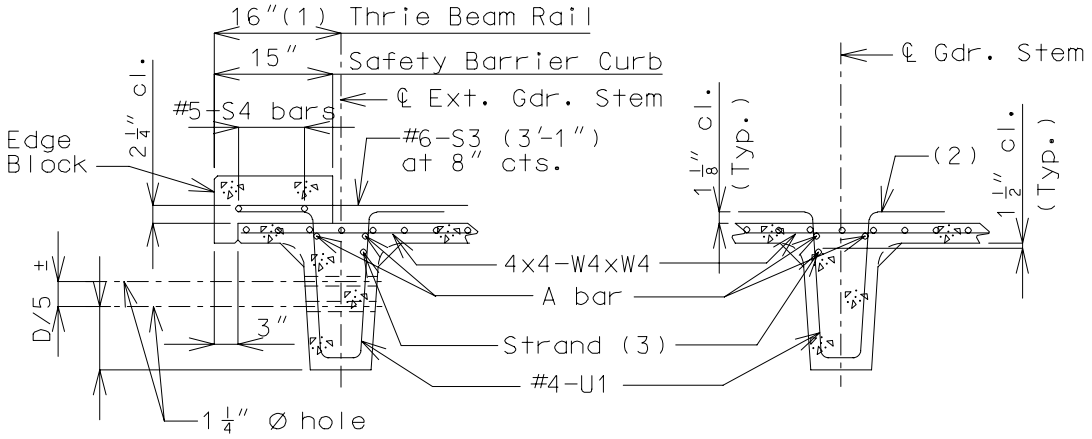

PART SECTION AT EXT. GIRDER STEM

PART SECTION THRU GIRDER STEM

(1) Varies for Curved Girder Structures (Max. 17-1/2")
(2) May be bent anytime after concrete attains 3,000 psi compression strength.
(3) Girders with no draped strands require one strand placed at top of girder (Inside face of girder). These strands shall be analyzed until new tables are issued.

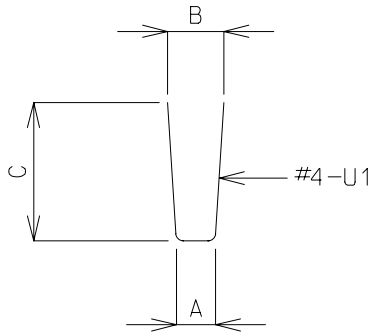

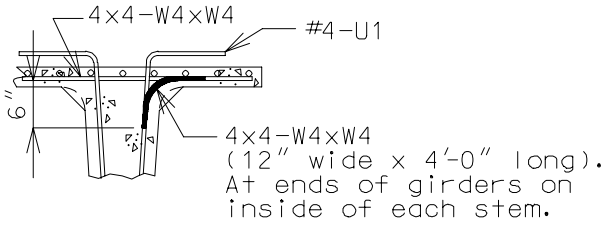

PART SECTION THRU GIRDER STEM

Length	A	B	C	Total
Gdr. Type 16	5 3/4"	9 1/4"	2'-4 1/2"	5'-1"
Gdr. Type 22	5"	9 1/4"	2'-10 1/2"	6'-0"
Gdr. Type 30	4"	9 1/4"	3'-6 1/2"	7'-3"

24'-10" ROADWAY
GIRDER SPAN LENGTH (HS20 & HS20 MILITARY LOADING)

Superstructure

Span Length ℄ to ℄ Bent	Allowable Span Length For P/S Concrete Double-Tee Girder Spans					
	Type 30		Type 22		Type 16	
	Span Length	Girder Seq. No.	Span Length	Girder Seq. No.	Span Length	Girder Seq. No.
20'	20' thru 28'	320	20' thru 29'	230	20' thru 23'	130
21'						
22'						
23'						
24'					24' thru 28'	140
25'						
26'						
27'						
28'						
29'	29' thru 34'	330			29'	151
30'			30' thru 34'	240		
31'						
32'						
33'						
34'						
35'	35' thru 40'	340	35' thru 37'	251		
36'						
37'						
38'			38' & 39'	262		
39'						
40'						
41'	41' thru 44'	351				
42'						
43'						
44'						
45'	45' & 46'	362				
46'						
47'	47' thru 49'	372				
48'						
49'						
50'	50' thru 52'	383				
51'						
52'						

Note:
The maximum span lengths shown for P/S Double-Tee Girders are based on a minimum of 2-spans (continuous) being used. If one of these P/S Double-Tee Girders is used as one simple span, then the span lengths should be reduced from the maximum allowable span shown, and the girder design should be checked.

24'-10" ROADWAY - BEAM TYPE 16 (4 GIRDER)
SECTION PROPERTIES & STRAND ARRANGEMENT

Superstructure

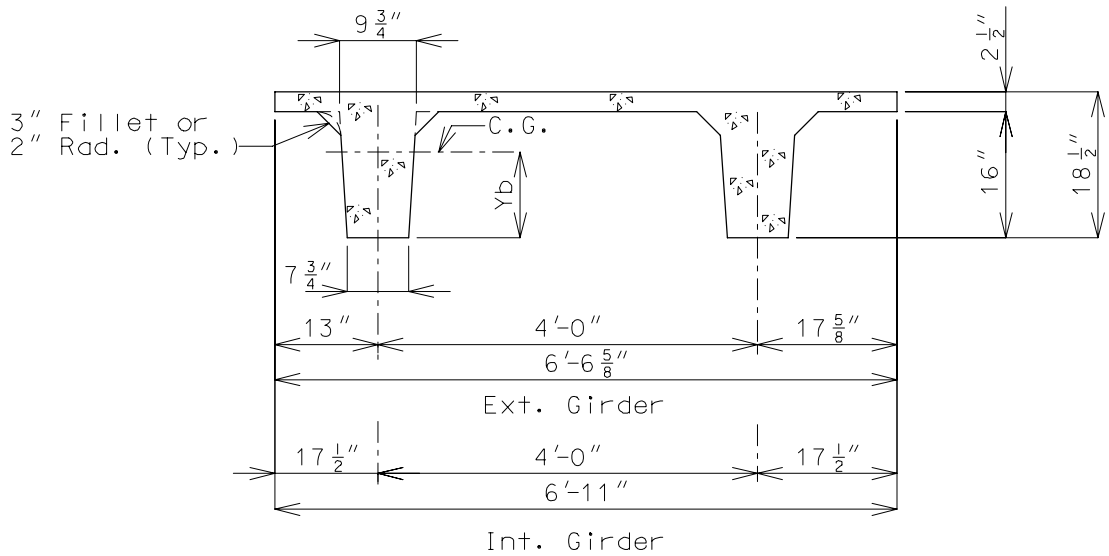

A = 476.6 sq. in.
Yb = 12.00 in.
I = 15,291 in.^{4}
EXTERIOR GIRDER

A = 487.5 sq. in.
Yb = 12.11 in.
I = 15,592 in.^{4}
INTERIOR GIRDER

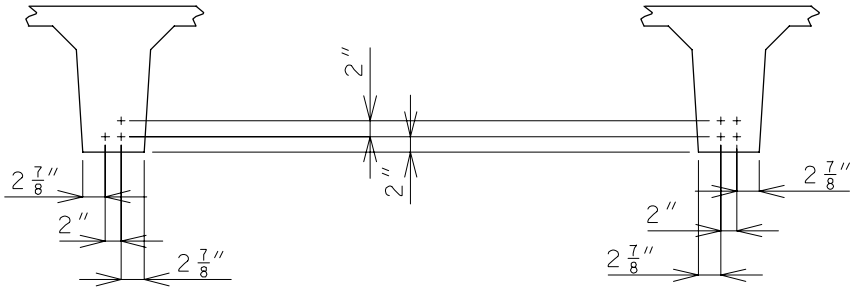

GIRDER SEQ. NO. 130
(3 STRANDS - 0 DRAPED)

GIRDER SEQ. NO. 140
(4 STRANDS - 0 DRAPED)

24'-10" ROADWAY - BEAM TYPE 16 (4 GIRDER)
SECTION PROPERTIES & STRAND ARRANGEMENT (CONT.)

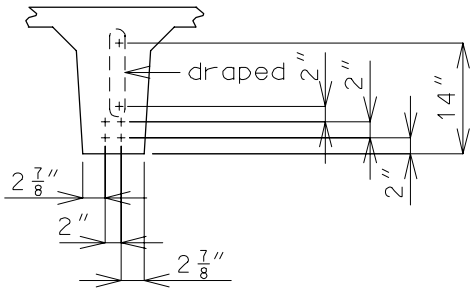

GIRDER SEQ. NO. 151
(5 STRANDS - 1 DRAPED)

Note: Location of draped strands shown in top of stem are at end of girder and draped strands in bott. of stem are at ℄.

24'-10" ROADWAY - BEAM TYPE 16 (HS20 & HS20 MILITARY) GIRDER REACTIONS

Superstructure

Span Length ℄ to ℄ Bent	Girder Seq. No.	Dead Load Reaction, kips per stem		
		Interior Girder	Exterior Girder	
			Int. Stem	Ext. Stem
20'	130	6.09	6.62	7.89
21'	130	6.42	6.97	8.30
22'	130	6.73	7.32	8.72
23'	130	7.06	7.67	9.14
24'	140	7.38	8.02	9.55
25'	140	7.71	8.38	9.97
26'	140	8.03	8.73	10.39
27'	140	8.35	9.08	10.81
28'	140	8.67	9.43	11.22
29'	151	8.99	9.78	11.64

24'-10" ROADWAY - BEAM TYPE 16 (HS20 & HS20 MILITARY) GIRDER CAMBER

Superstructure

Span Length ℄ to ℄ Bent	Girder Seq. No.	Interior Girder				Exterior Girder			
		Girder Camber without Slab		Girder Camber with Slab		Girder Camber without Slab		Girder Camber with Slab	
		1/2 pt.	1/4 pt.	1/2 pt.	1/4 pt.	1/2 pt.	1/4 pt.	1/2 pt.	1/4 pt.
20'	130	1/4"	3/16"	1/4"	3/16"	1/4"	3/16"	1/4"	3/16"
21'	130	5/16"	3/16"	1/4"	3/16"	5/16"	3/16"	1/4"	3/16"
22'	130	5/16"	1/4"	5/16"	3/16"	5/16"	1/4"	5/16"	3/16"
23'	130	5/16"	1/4"	5/16"	3/16"	5/16"	1/4"	5/16"	3/16"
24'	140	1/2"	3/8"	7/16"	5/16"	1/2"	3/8"	7/16"	5/16"
25'	140	1/2"	3/8"	1/2"	5/16"	9/16"	3/8"	1/2"	5/16"
26'	140	9/16"	3/8"	1/2"	3/8"	9/16"	3/8"	1/2"	3/8"
27'	140	5/8"	7/16"	1/2"	3/8"	5/8"	7/16"	1/2"	3/8"
28'	140	5/8"	7/16"	9/16"	3/8"	5/8"	7/16"	9/16"	3/8"
29'	151	3/4"	9/16"	11/16"	1/2"	3/4"	9/16"	11/16"	1/2"

24'-10" ROADWAY - BEAM TYPE 22 (4 GIRDER) SECTION PROPERTIES & STRAND ARRANGEMENT

Superstructure

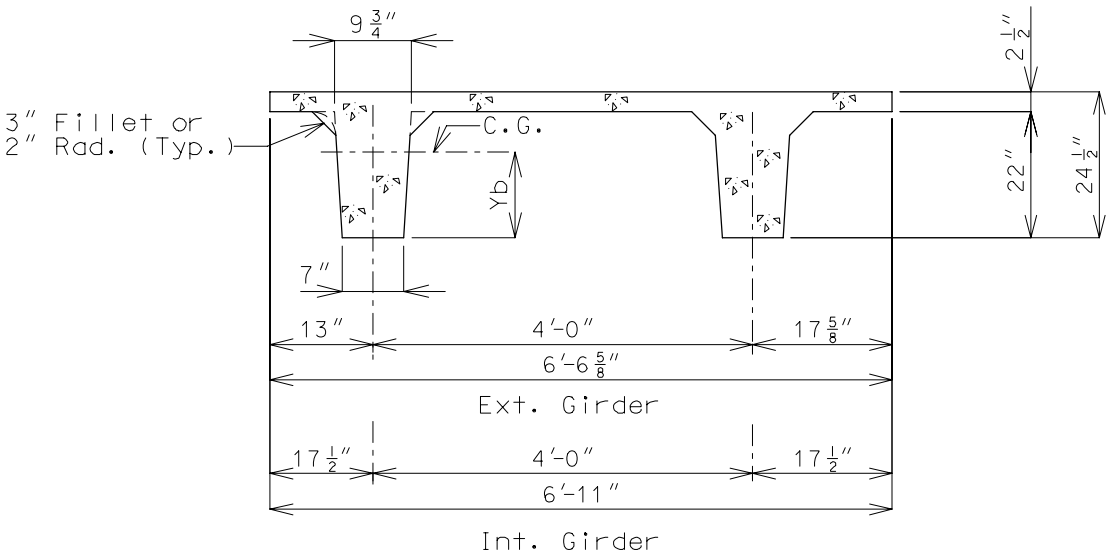

A = 565.1 sq. in.
Yb = 15.65 in.
I = 32,223 in.^{4}
EXTERIOR GIRDER

A = 576.0 sq. in.
Yb = 15.80 in.
I = 32,848 in.^{4}
INTERIOR GIRDER

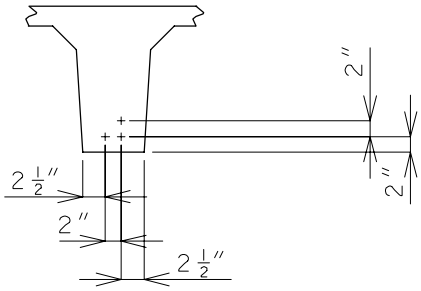

GIRDER SEQ. NO. 230
(3 STRANDS - 0 DRAPED)

24'-10" ROADWAY - BEAM TYPE 22
SECTION PROPERTIES & STRAND ARRANGEMENT (CONT.)

Superstructure

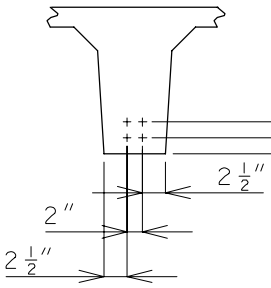

GIRDER SEQ. NO. 240
(4 STRANDS - 0 DRAPED)

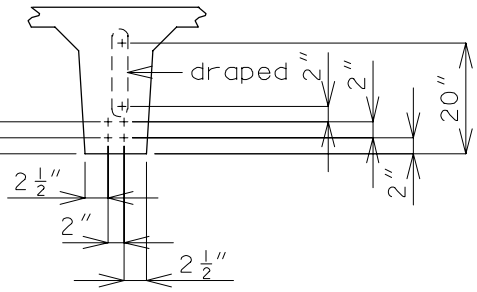

GIRDER SEQ. NO. 251
(5 STRANDS - 1 DRAPED)

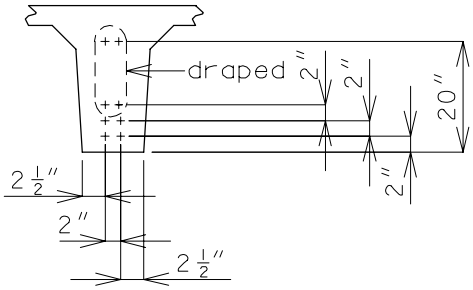

GIRDER SEQ. NO. 262
(6 STRANDS - 2 DRAPED)

Note: Location of draped strands shown in top of stem are at end of girder and draped strands in bott. of stem are at ℄.

24'-10" ROADWAY - BEAM TYPE 22 (HS20 & HS20 MILITARY) GIRDER REACTIONS

Superstructure

Span Length ℄ to ℄ Bent	Girder Seq. No.	Dead Load Reaction, kips per stem		
		Interior Girder	Exterior Girder	
			Int. Stem	Ext. Stem
20'	230	6.47	7.00	8.25
21'	230	6.82	7.37	8.69
22'	230	7.16	7.75	9.13
23'	230	7.51	8.12	9.57
24'	230	7.86	8.49	10.01
25'	230	8.21	8.87	10.45
26'	230	8.55	9.24	10.89
27'	230	8.90	9.61	11.33
28'	230	9.24	9.99	11.77
29'	230	9.58	10.36	12.21
30'	240	9.93	10.73	12.65
31'	240	10.27	11.11	13.09
32'	240	10.62	11.48	13.53
33'	240	10.96	11.85	13.97
34'	240	11.32	12.23	14.41
35'	251	11.66	12.60	14.85
36'	251	12.01	12.97	15.29
37'	251	12.35	13.35	15.73
38'	262	12.69	13.71	16.16
39'	262	13.03	14.07	16.58

Reactions are DL1 + DL2 from BR202 (Simple Span).

24'-10" ROADWAY - BEAM TYPE 22 (HS20 & HS20 MILITARY) GIRDER CAMBER

Superstructure

Span Length ℄ to ℄ Bent	Girder Seq. No.	Interior Girder				Exterior Girder			
		Girder Camber without Slab		Girder Camber with Slab		Girder Camber without Slab		Girder Camber with Slab	
		1/2 pt.	1/4 pt.	1/2 pt.	1/4 pt.	1/2 pt.	1/4 pt.	1/2 pt.	1/4 pt.
20'	230	3/16"	1/8"	3/16"	1/8"	3/16"	1/8"	3/16"	1/8"
21'	230	3/16"	1/8"	3/16"	1/8"	3/16"	1/8"	3/16"	1/8"
22'	230	3/16"	1/8"	3/16"	1/8"	3/16"	1/8"	3/16"	1/8"
23'	230	1/4"	3/16"	3/16"	1/8"	1/4"	3/16"	3/16"	1/8"
24'	230	1/4"	3/16"	1/4"	3/16"	1/4"	3/16"	1/4"	3/16"
25'	230	1/4"	3/16"	1/4"	3/16"	1/4"	3/16"	1/4"	3/16"
26'	230	1/4"	3/16"	1/4"	3/16"	1/4"	3/16"	1/4"	3/16"
27'	230	5/16"	3/16"	1/4"	3/16"	5/16"	3/16"	1/4"	3/16"
28'	230	5/16"	1/4"	1/4"	3/16"	5/16"	1/4"	1/4"	3/16"
29'	230	5/16"	1/4"	5/16"	3/16"	5/16"	1/4"	5/16"	3/16"
30'	240	7/16"	5/16"	7/16"	5/16"	7/16"	5/16"	7/16"	5/16"
31'	240	1/2"	3/8"	7/16"	5/16"	1/2"	3/8"	7/16"	5/16"
32'	240	9/16"	3/8"	7/16"	5/16"	9/16"	3/8"	7/16"	5/16"
33'	240	9/16"	3/8"	1/2"	3/8"	9/16"	3/8"	1/2"	3/8"
34'	240	9/16"	7/16"	1/2"	3/8"	9/16"	7/16"	1/2"	3/8"
35'	251	3/4"	1/2"	5/8"	7/16"	3/4"	1/2"	5/8"	7/16"
36'	251	3/4"	9/16"	5/8"	7/16"	3/4"	9/16"	5/8"	7/16"
37'	251	3/4"	9/16"	5/8"	7/16"	3/4"	9/16"	5/8"	7/16"
38'	262	15/16"	11/16"	13/16"	9/16"	15/16"	11/16"	13/16"	9/16"
39'	262	1"	11/16"	13/16"	9/16"	1"	11/16"	13/16"	9/16"

24'-10" ROADWAY - BEAM TYPE 30 (4 GIRDER) SECTION PROPERTIES & STRAND ARRANGEMENT

Superstructure

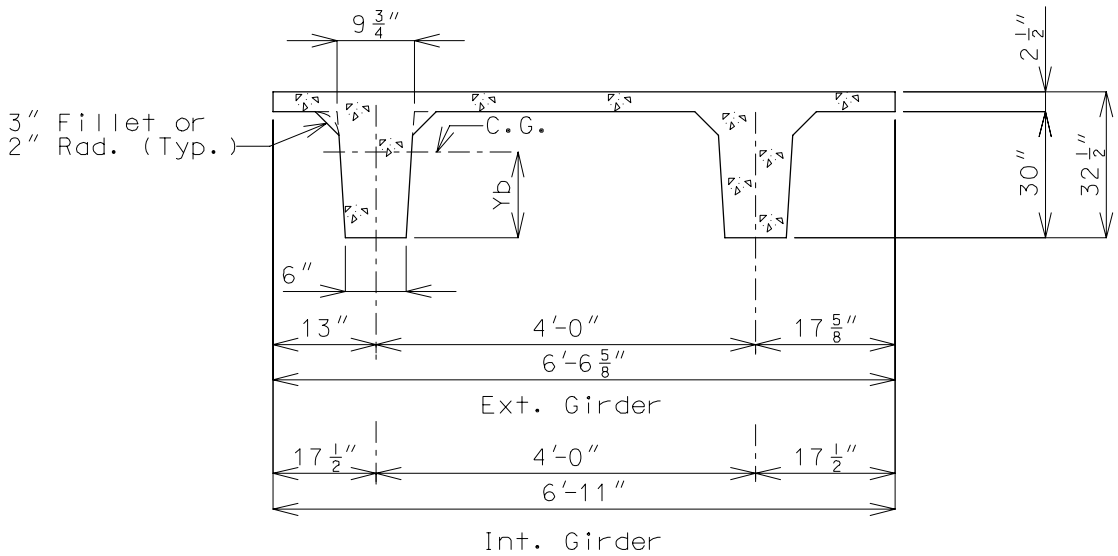

A = 669.1 sq. in.
Yb = 20.61 in.
I = 66,358 in.^{4}
EXTERIOR GIRDER

A = 680.0 sq. in.
Yb = 20.79 in.
I = 67,575 in.^{4}
INTERIOR GIRDER

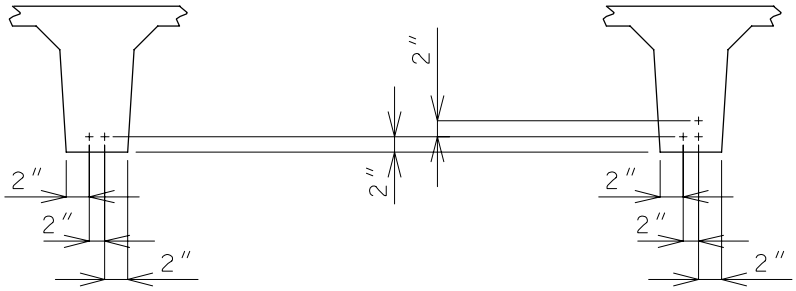

GIRDER SEQ. NO. 320
(2 STRANDS - 0 DRAPED)

GIRDER SEQ. NO. 330
(3 STRANDS - 0 DRAPED)

24'-10" ROADWAY - BEAM TYPE 30
SECTION PROPERTIES & STRAND ARRANGEMENT (CONT.)

Superstructure

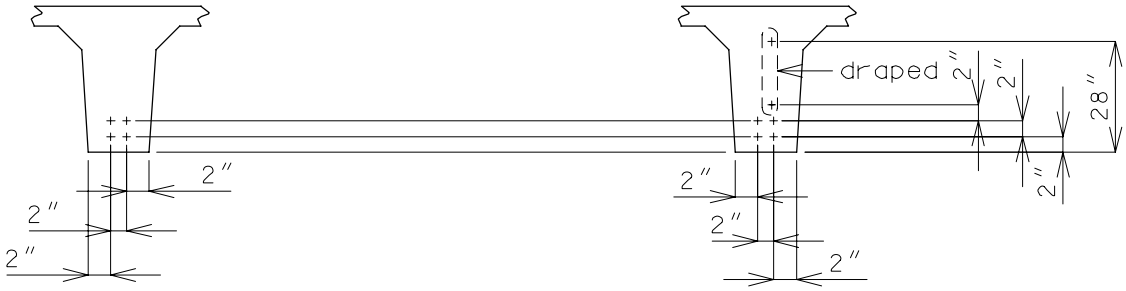

GIRDER SEQ. NO. 340
(4 STRANDS - 0 DRAPED)

GIRDER SEQ. NO. 351
(5 STRANDS - 1 DRADED)

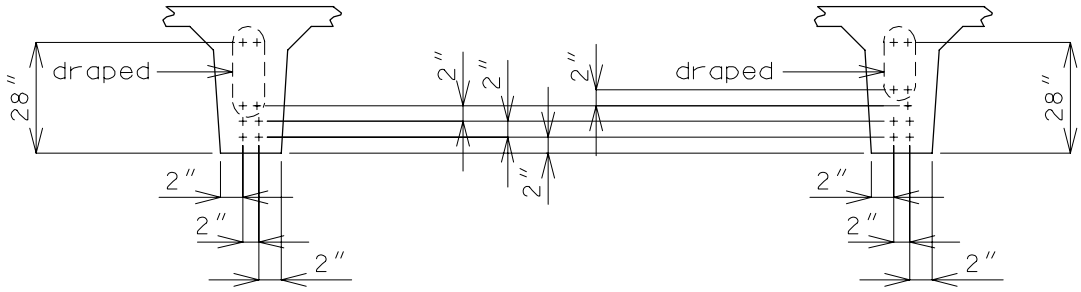

GIRDER SEQ. NO. 362
(6 STRANDS - 2 DRAPED)

GIRDER SEQ. NO. 372
(7 STRANDS - 2 DRAPED)

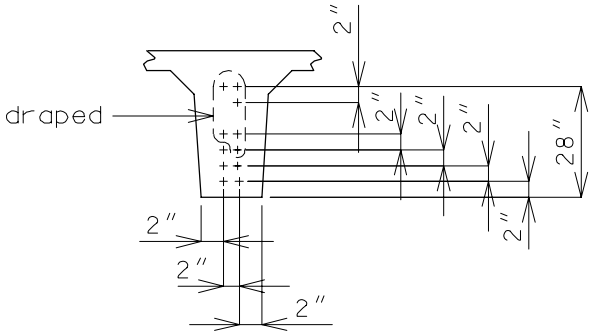

GIRDER SEQ. NO. 383
(8 STRANDS - 3 DRAPED)

Note: Location of draped strands shown in top of stem are at end of girder and draped strands in bott. of stem are at ℄.

24'-10" ROADWAY - BEAM TYPE 30 (HS20 & HS20 MILITARY) GIRDER REACTIONS

Superstructure

Span Length ℄ to ℄ Bent	Girder Seq. No.	Dead Load Reaction, kips per stem		
		Interior Girder	Exterior Girder	
			Int. Stem	Ext. Stem
20'	320	6.98	7.51	8.76
21'	320	7.36	7.91	9.22
22'	320	7.73	8.31	9.69
23'	320	8.10	8.71	10.16
24'	320	8.47	9.11	10.62
25'	320	8.85	9.51	11.09
26'	320	9.22	9.91	11.56
27'	320	9.60	10.31	12.03
28'	320	9.96	10.71	12.49
29'	330	10.33	11.11	12.96
30'	330	10.71	11.51	13.43
31'	330	11.08	11.91	13.90
32'	330	11.46	12.31	14.36
33'	330	11.82	12.71	14.83
34'	330	12.20	13.11	15.30
35'	340	12.57	13.51	15.76
36'	340	12.95	13.92	16.23
37'	340	13.32	14.32	16.70
38'	340	13.69	14.72	17.17
39'	340	14.06	15.12	17.63
40'	340	14.43	15.52	18.10
41'	351	14.81	15.92	18.57
42'	351	15.18	16.32	19.04
43'	351	15.55	16.72	19.50
44'	351	15.92	17.12	19.97
45'	362	16.30	17.52	20.44
46'	362	16.67	17.92	20.90
47'	372	17.05	18.32	21.37
48'	372	17.41	18.71	21.82
49'	372	17.79	19.12	22.28
50'	383	18.16	19.52	22.76
51'	383	18.53	19.92	23.22
52'	383	18.90	20.32	23.69

24'-10" ROADWAY - BEAM TYPE 30 (HS20 & HS20 MILITARY) GIRDER CAMBER

Superstructure

Span Length ℄ to ℄ Bent	Girder Seq. No.	Interior Girder				Exterior Girder			
		Girder Camber without Slab		Girder Camber with Slab		Girder Camber without Slab		Girder Camber with Slab	
		1/2 pt.	1/4 pt.	1/2 pt.	1/4 pt.	1/2 pt.	1/4 pt.	1/2 pt.	1/4 pt.
20'	320	1/16"	1/16"	1/16"	1/16"	1/16"	1/16"	1/16"	1/16"
21'	320	1/16"	1/16"	1/16"	1/16"	1/16"	1/16"	1/16"	1/16"
22'	320	1/8"	1/16"	1/16"	1/16"	1/8"	1/16"	1/16"	1/16"
23'	320	1/8"	1/16"	1/16"	1/16"	1/8"	1/16"	1/16"	1/16"
24'	320	1/8"	1/16"	1/8"	1/16"	1/8"	1/16"	1/8"	1/16"
25'	320	1/8"	1/16"	1/8"	1/16"	1/8"	1/16"	1/8"	1/16"
26'	320	1/8"	1/16"	1/8"	1/16"	1/8"	1/16"	1/8"	1/16"
27'	320	1/8"	1/16"	1/8"	1/16"	1/8"	1/16"	1/8"	1/16"
28'	320	1/8"	1/8"	1/8"	1/16"	1/8"	1/8"	1/8"	1/16"
29'	330	1/4"	3/16"	3/16"	1/8"	1/4"	3/16"	3/16"	1/8"
30'	330	1/4"	3/16"	3/16"	1/8"	1/4"	3/16"	3/16"	1/8"
31'	330	1/4"	3/16"	1/4"	3/16"	1/4"	3/16"	1/4"	3/16"
32'	330	1/4"	3/16"	1/4"	3/16"	1/4"	3/16"	1/4"	3/16"
33'	330	1/4"	3/16"	1/4"	3/16"	1/4"	3/16"	1/4"	3/16"
34'	330	5/16"	3/16"	1/4"	3/16"	5/16"	3/16"	1/4"	3/16"
35'	340	7/16"	5/16"	3/8"	1/4"	7/16"	5/16"	3/8"	1/4"
36'	340	7/16"	5/16"	3/8"	1/4"	7/16"	5/16"	3/8"	1/4"
37'	340	1/2"	5/16"	3/8"	5/16"	1/2"	5/16"	3/8"	5/16"
38'	340	1/2"	3/8"	7/16"	5/16"	1/2"	3/8"	7/16"	5/16"
39'	340	1/2"	3/8"	7/16"	5/16"	1/2"	3/8"	7/16"	5/16"
40'	340	1/2"	3/8"	7/16"	5/16"	1/2"	3/8"	7/16"	5/16"
41'	351	5/8"	7/16"	9/16"	3/8"	5/8"	7/16"	9/16"	3/8"
42'	351	11/16"	1/2"	9/16"	3/8"	11/16"	1/2"	9/16"	3/8"
43'	351	11/16"	1/2"	9/16"	3/8"	11/16"	1/2"	9/16"	3/8"
44'	351	11/16"	1/2"	9/16"	3/8"	11/16"	1/2"	9/16"	3/8"
45'	362	7/8"	5/8"	11/16"	1/2"	7/8"	5/8"	11/16"	1/2"
46'	362	7/8"	5/8"	11/16"	1/2"	7/8"	5/8"	11/16"	1/2"
47'	372	1"	11/16"	13/16"	11/16"	1"	11/16"	13/16"	11/16"
48'	372	1"	3/4"	13/16"	5/8"	1"	3/4"	13/16"	5/8"
49'	372	1-1/16"	3/4"	13/16"	5/8"	1-1/16"	3/4"	13/16"	5/8"
50'	383	1-1/4"	7/8"	1"	3/4"	1-1/4"	7/8"	1"	3/4"
51'	383	1-1/4"	7/8"	1"	3/4"	1-1/4"	7/8"	1"	3/4"
52'	383	1-5/16"	15/16"	1"	3/4"	1-5/16"	15/16"	1"	3/4"

26'-10" ROADWAY
GIRDER SPAN LENGTH (HS20 & HS20 MILITARY LOADING)

Superstructure

Span Length ℄ to ℄ Bent	Allowable Span Length For P/S Concrete Double-Tee Girder Spans					
	Type 30		Type 22		Type 16	
	Span Length	Girder Seq. No.	Span Length	Girder Seq. No.	Span Length	Girder Seq. No.
20'	20' thru 24'	320	20' & 21'	220	20' thru 23'	130
21'			22' thru 27'	230		
22'						
23'						
24'					24' thru 27'	140
25'	25' thru 32'	330				
26'						
27'						
28'			28' thru 32'	240	28'	151
29'						
30'						
31'						
32'						
33'	33' thru 38'	340	33' thru 35'	251		
34'						
35'						
36'			36' & 37'	262		
37'						
38'						
39'	39' thru 42'	351				
40'						
41'						
42'						
43'	43' thru 45'	362				
44'						
45'						
46'	46' & 47'	372				
47'	48' thru 50'	383				
48'						
49'						
50'						

Note:
The maximum span lengths shown for P/S Double-Tee Girders are based on a minimum of 2-spans (continuous) being used. If one of these P/S Double-Tee Girders is used as one simple span, then the span lengths should be reduced from the maximum allowable span shown, and the girder design should be checked.

26'-10" ROADWAY - BEAM TYPE 16 (4 GIRDER) SECTION PROPERTIES & STRAND ARRANGEMENT

Superstructure

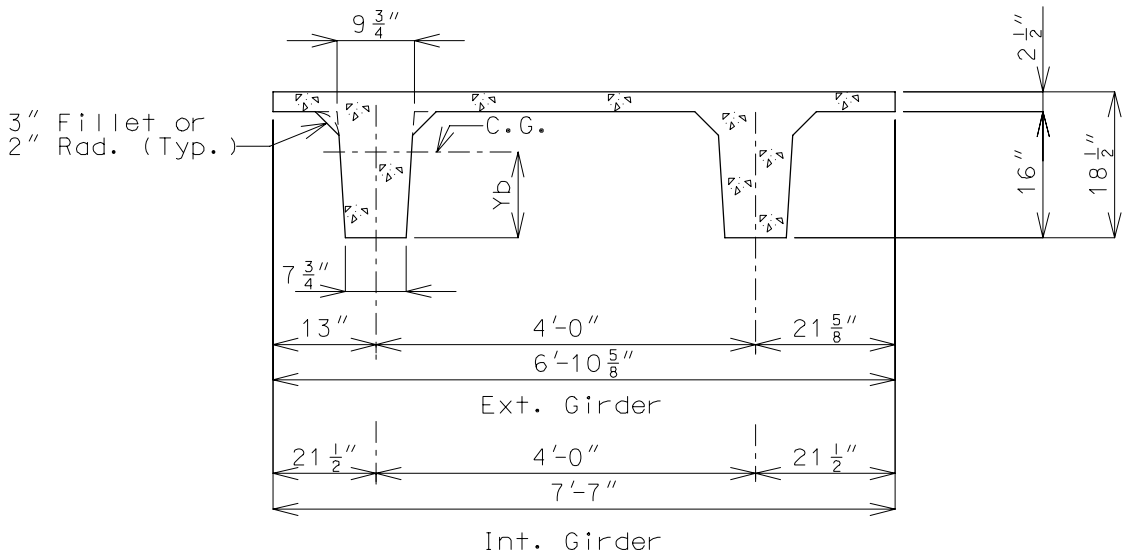

A = 486.6 sq. in.
Yb = 12.10 in.
I = 15,567 in.^{4}
EXTERIOR GIRDER

A = 507.5 sq. in.
Yb = 12.31 in.
I = 16,109 in.^{4}
INTERIOR GIRDER

26'-10" ROADWAY - BEAM TYPE 16 (4 GIRDER)
SECTION PROPERTIES & STRAND ARRANGEMENT (CONT.)

Superstructure

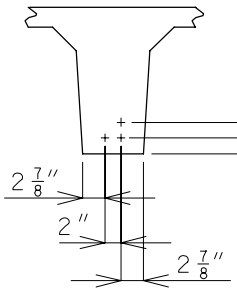

GIRDER SEQ. NO. 130
(3 STRANDS - 0 DRAPED)

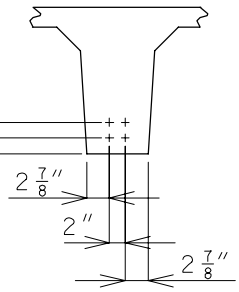

GIRDER SEQ. NO. 140
(4 STRANDS - 0 DRAPED)

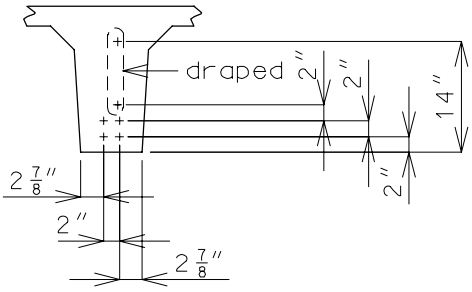

GIRDER SEQ. NO. 151
(5 STRANDS - 1 DRAPED)

Note: Location of draped strands shown in top of stem are at end of girder and draped strands in bott. of stem are at ℄.

26'-10" ROADWAY - BEAM TYPE 16 (HS20 & HS20 MILITARY) GIRDER REACTIONS

Superstructure

Span Length ℄ to ℄ Bent	Girder Seq. No.	Dead Load Reaction, kips per stem		
		Interior Girder	Exterior Girder	
			Int. Stem	Ext. Stem
20'	130	6.38	6.85	7.84
21'	130	6.72	7.22	8.26
22'	130	7.06	7.59	8.68
23'	130	7.40	7.95	9.10
24'	140	7.74	8.32	9.52
25'	140	8.08	8.68	9.94
26'	140	8.41	9.03	10.34
27'	140	8.74	9.39	10.74
28'	151	9.06	9.75	11.15

Reactions are DL1 + DL2 from BR202 (Simple Span).

26'-10" ROADWAY - BEAM TYPE 16 (HS20 & HS20 MILITARY) GIRDER CAMBER

Superstructure

Span Length ℄ to ℄ Bent	Girder Seq. No.	Interior Girder				Exterior Girder			
		Girder Camber without Slab		Girder Camber with Slab		Girder Camber without Slab		Girder Camber with Slab	
		1/2 pt.	1/4 pt.	1/2 pt.	1/4 pt.	1/2 pt.	1/4 pt.	1/2 pt.	1/4 pt.
20'	130	1/4"	3/16"	1/4"	3/16"	1/4"	3/16"	1/4"	3/16"
21'	130	5/16"	3/16"	1/4"	3/16"	5/16"	3/16"	1/4"	3/16"
22'	130	5/16"	3/16"	1/4"	3/16"	5/16"	1/4"	1/4"	3/16"
23'	130	5/16"	1/4"	5/16"	3/16"	5/16"	1/4"	5/16"	3/16"
24'	140	1/2"	5/16"	7/16"	5/16"	1/2"	3/8"	7/16"	5/16"
25'	140	1/2"	3/8"	7/16"	5/16"	1/2"	3/8"	7/16"	5/16"
26'	140	9/16"	3/8"	1/2"	3/8"	9/16"	3/8"	1/2"	3/8"
27'	140	9/16"	7/16"	1/2"	3/8"	9/16"	7/16"	1/2"	3/8"
28'	151	3/4"	1/2"	5/8"	7/16"	3/4"	1/2"	5/8"	7/16"

26'-10" ROADWAY - BEAM TYPE 22 (4 GIRDER) SECTION PROPERTIES & STRAND ARRANGEMENT

Superstructure

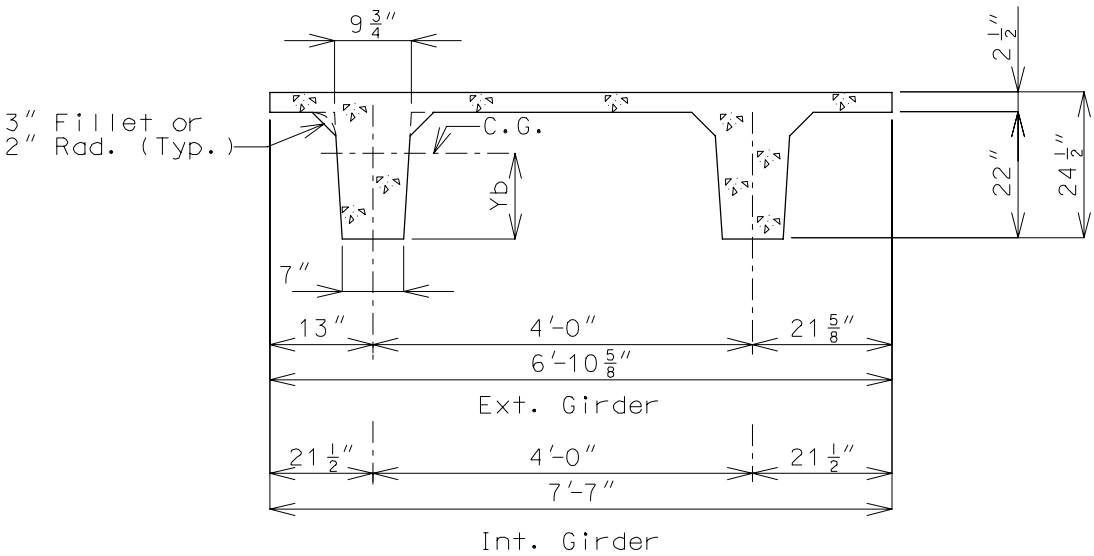

A = 575.1 sq. in.
Yb = 15.79 in.
I = 32,796 in.^{4}
EXTERIOR GIRDER

A = 576.0 sq. in.
Yb = 16.05 in.
I = 33,932 in.^{4}
INTERIOR GIRDER

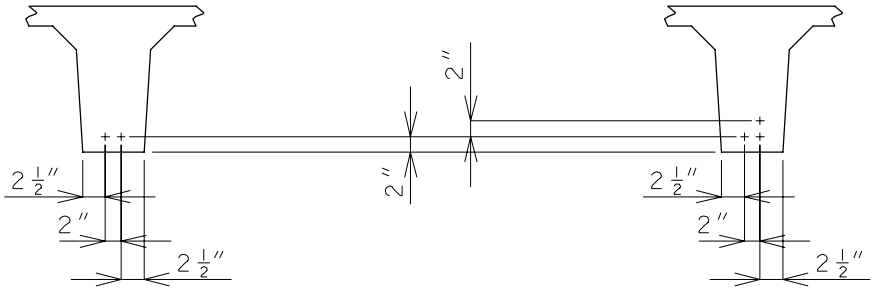

GIRDER SEQ. NO. 220
(2 STRANDS - 0 DRAPED)

GIRDER SEQ. NO. 230
(3 STRANDS - 0 DRAPED)

26'-10" ROADWAY - BEAM TYPE 22
SECTION PROPERTIES & STRAND ARRANGEMENT (CONT.)

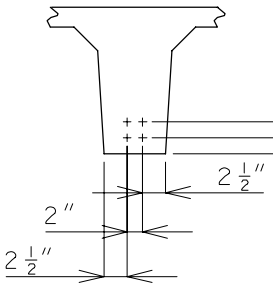

GIRDER SEQ. NO. 240
(4 STRANDS - 0 DRAPED)

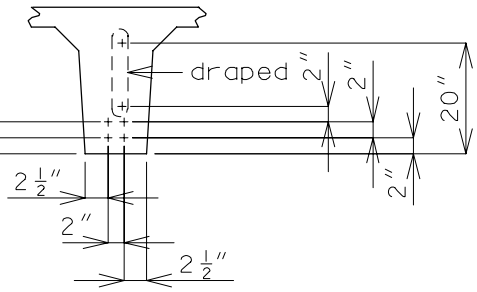

GIRDER SEQ. NO. 251
(5 STRANDS - 1 DRAPED)

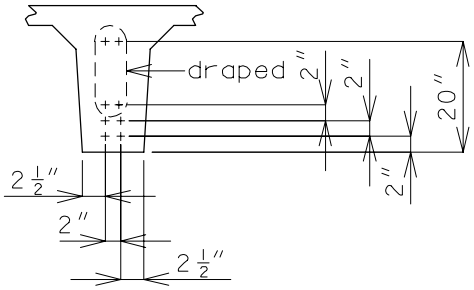

GIRDER SEQ. NO. 262
(6 STRANDS - 2 DRAPED)

Note: Location of draped strands shown in top of stem are at end of girder and draped strands in bott. of stem are at ℄.

26'-10" ROADWAY - BEAM TYPE 22 (HS20 & HS20 MILITARY) GIRDER REACTIONS

Superstructure

Span Length ℄ to ℄ Bent	Girder Seq. No.	Dead Load Reaction, kips per stem		
		Interior Girder	Exterior Girder	
			Int. Stem	Ext. Stem
20'	220	6.82	7.29	8.28
21'	220	7.17	7.68	8.72
22'	230	7.54	8.06	9.16
23'	230	7.90	8.45	9.60
24'	230	8.27	8.84	10.04
25'	230	8.64	9.23	10.48
26'	230	8.99	9.62	10.92
27'	230	9.36	10.01	11.37
28'	240	9.72	10.40	11.81
29'	240	10.09	10.79	12.25
30'	240	10.45	11.17	12.69
31'	240	10.81	11.56	13.13
32'	240	11.18	11.95	13.57
33'	251	11.54	12.34	14.02
34'	251	11.91	12.73	14.46
35'	251	12.26	13.10	14.89
36'	262	12.61	13.49	15.31
37'	262	12.98	13.88	15.76

Reactions are DL1 + DL2 from BR202 (Simple Span).

26'-10" ROADWAY - BEAM TYPE 22 (HS20 & HS20 MILITARY) GIRDER CAMBER

Superstructure

Span Length ℄ to ℄ Bent	Girder Seq. No.	Interior Girder				Exterior Girder			
		Girder Camber without Slab		Girder Camber with Slab		Girder Camber without Slab		Girder Camber with Slab	
		1/2 pt.	1/4 pt.	1/2 pt.	1/4 pt.	1/2 pt.	1/4 pt.	1/2 pt.	1/4 pt.
20'	220	1/8"	1/16"	1/8"	1/16"	1/8"	1/16"	1/8"	1/16"
21'	220	1/8"	1/16"	1/8"	1/16"	1/8"	1/16"	1/8"	1/16"
22'	230	3/16"	1/8"	3/16"	1/8"	3/16"	1/8"	3/16"	1/8"
23'	230	1/4"	3/16"	3/16"	1/8"	1/4"	3/16"	3/16"	1/8"
24'	230	1/4"	3/16"	3/16"	1/8"	1/4"	3/16"	3/16"	1/8"
25'	230	1/4"	3/16"	1/4"	3/16"	1/4"	3/16"	1/4"	3/16"
26'	230	1/4"	3/16"	1/4"	3/16"	1/4"	3/16"	1/4"	3/16"
27'	230	5/16"	3/16"	1/4"	3/16"	5/16"	3/16"	1/4"	3/16"
28'	240	7/16"	5/16"	3/8"	1/4"	7/16"	5/16"	3/8"	1/4"
29'	240	7/16"	5/16"	3/8"	1/4"	7/16"	5/16"	3/8"	5/16"
30'	240	7/16"	5/16"	3/8"	5/16"	7/16"	5/16"	3/8"	5/16"
31'	240	1/2"	3/8"	7/16"	5/16"	1/2"	3/8"	7/16"	5/16"
32'	240	1/2"	3/8"	7/16"	5/16"	1/2"	3/8"	7/16"	5/16"
33'	251	11/16"	1/2"	9/16"	3/8"	11/16"	1/2"	9/16"	3/8"
34'	251	11/16"	1/2"	9/16"	7/16"	11/16"	1/2"	9/16"	7/16"
35'	251	11/16"	1/2"	5/8"	7/16"	11/16"	1/2"	5/8"	7/16"
36'	262	7/8"	5/8"	3/4"	1/2"	7/8"	5/8"	3/4"	1/2"
37'	262	7/8"	5/8"	3/4"	9/16"	7/8"	5/8"	3/4"	9/16"

26'-10" ROADWAY - BEAM TYPE 30 (4 GIRDER) SECTION PROPERTIES & STRAND ARRANGEMENT

Superstructure

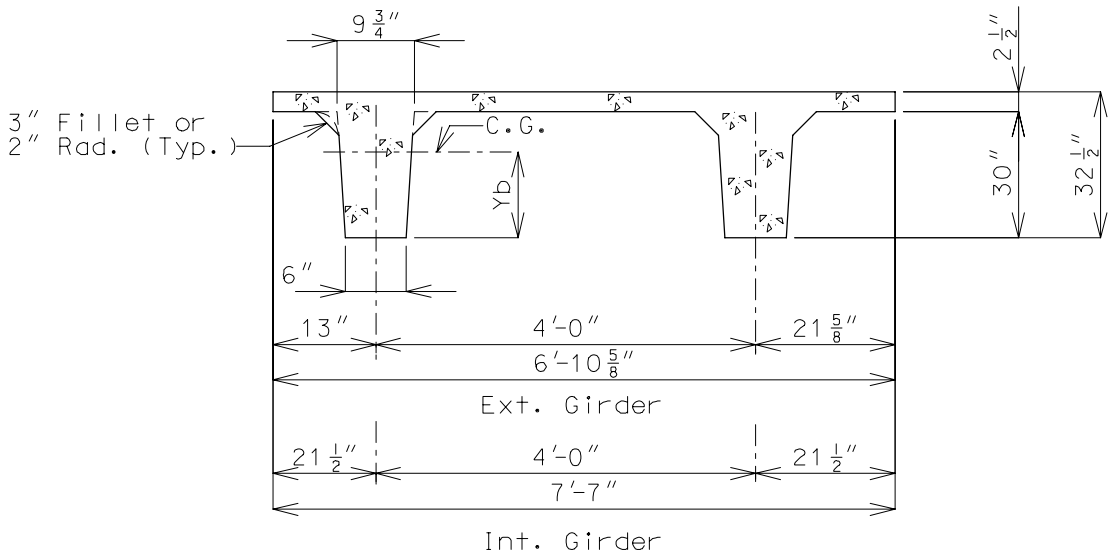

A = 679.1 sq. in.
Yb = 20.77 in.
I = 67,472 in.^{4}
EXTERIOR GIRDER

A = 700.0 sq. in.
Yb = 21.08 in.
I = 69,713 in.^{4}
INTERIOR GIRDER

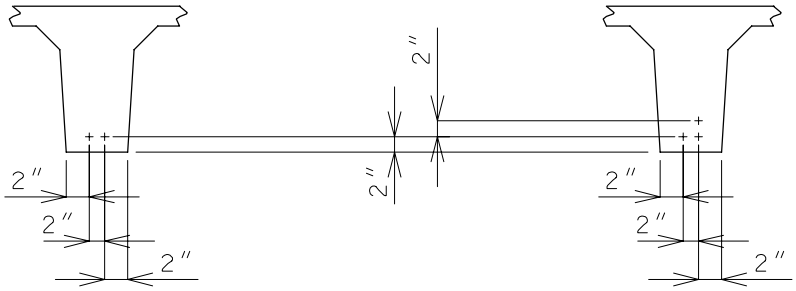

GIRDER SEQ. NO. 320
(2 STRANDS - 0 DRAPED)

GIRDER SEQ. NO. 330
(3 STRANDS - 0 DRAPED)

26'-10" ROADWAY - BEAM TYPE 30
SECTION PROPERTIES & STRAND ARRANGEMENT (CONT.)

Superstructure

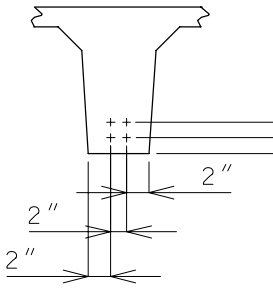

GIRDER SEQ. NO. 340
(4 STRANDS - 0 DRAPED)

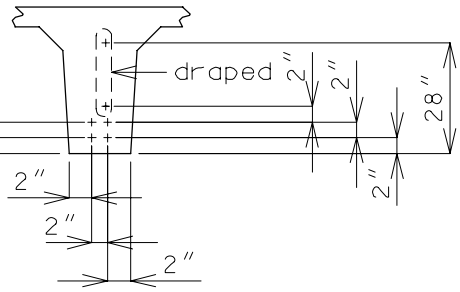

GIRDER SEQ. NO. 351
(5 STRANDS - 1 DRAPED)

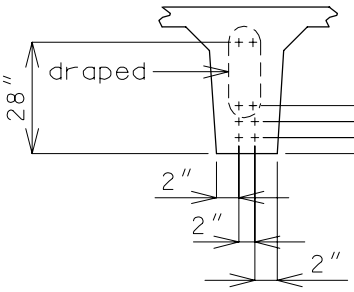

GIRDER SEQ. NO. 362
(6 STRANDS - 2 DRAPED)

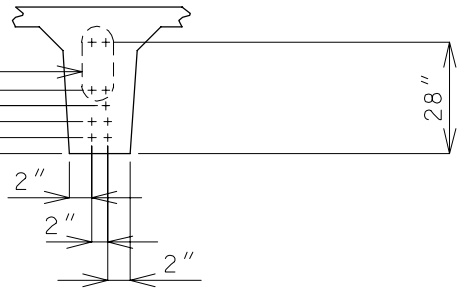

GIRDER SEQ. NO. 372
(7 STRANDS - 2 DRAPED)

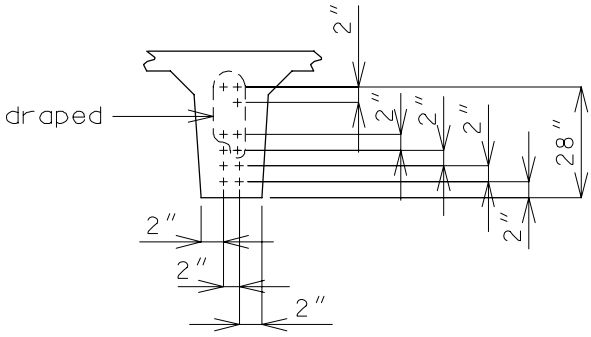

GIRDER SEQ. NO. 383
(8 STRANDS - 3 DRAPED)

Note: Location of draped strands shown in top of stem are at end of girder and draped strands in bott. of stem are at ℄.

26'-10" ROADWAY - BEAM TYPE 30 (HS20 & HS20 MILITARY) GIRDER REACTIONS

Superstructure

Span Length ℄ to ℄ Bent	Girder Seq. No.	Dead Load Reaction, kips per stem		
		Interior Girder	Exterior Girder	
			Int. Stem	Ext. Stem
20'	320	7.32	7.79	8.79
21'	320	7.71	8.21	9.25
22'	320	8.10	8.63	9.72
23'	320	8.49	9.04	10.19
24'	320	8.89	9.46	10.66
25'	330	9.28	9.87	11.13
26'	330	9.66	10.29	11.60
27'	330	10.05	10.71	12.06
28'	330	10.45	11.12	12.53
29'	330	10.84	11.54	13.00
30'	330	11.23	11.95	13.47
31'	330	11.62	12.37	13.94
32'	330	12.01	12.79	14.41
33'	340	12.40	13.20	14.88
34'	340	12.79	13.62	15.34
35'	340	13.19	14.03	15.81
36'	340	13.57	14.45	16.28
37'	340	13.96	14.87	16.75
38'	340	14.36	15.28	17.22
39'	351	14.74	15.70	17.69
40'	351	15.14	16.11	18.16
41'	351	15.52	16.53	18.63
42'	351	15.92	16.94	19.09
43'	362	16.31	17.36	19.56
44'	362	16.70	17.78	20.02
45'	362	17.09	18.19	20.50
46'	372	17.47	18.59	20.95
47'	372	17.86	19.00	21.42
48'	383	18.26	19.43	21.88
49'	383	18.64	19.84	22.35
50'	383	19.04	20.26	22.82

Reactions are DL1 + DL2 from BR202 (Simple Span).

26'-10" ROADWAY - BEAM TYPE 30 (HS20 & HS20 MILITARY) GIRDER CAMBER

Superstructure

Span Length ℄ to ℄ Bent	Girder Seq. No.	Interior Girder				Exterior Girder			
		Girder Camber without Slab		Girder Camber with Slab		Girder Camber without Slab		Girder Camber with Slab	
		1/2 pt.	1/4 pt.	1/2 pt.	1/4 pt.	1/2 pt.	1/4 pt.	1/2 pt.	1/4 pt.
20'	320	1/16"	1/16"	1/16"	1/16"	1/16"	1/16"	1/16"	1/16"
21'	320	1/16"	1/16"	1/16"	1/16"	1/16"	1/16"	1/16"	1/16"
22'	320	1/16"	1/16"	1/16"	1/16"	1/8"	1/16"	1/16"	1/16"
23'	320	1/8"	1/16"	1/16"	1/16"	1/8"	1/16"	1/16"	1/16"
24'	320	1/8"	1/16"	1/16"	1/16"	1/8"	1/16"	1/8"	1/16"
25'	330	3/16"	1/8"	3/16"	1/8"	3/16"	1/8"	3/16"	1/8"
26'	330	3/16"	1/8"	3/16"	1/8"	3/16"	1/8"	3/16"	1/8"
27'	330	3/16"	1/8"	3/16"	1/8"	3/16"	1/8"	3/16"	1/8"
28'	330	3/16"	1/8"	3/16"	1/8"	3/16"	1/8"	3/16"	1/8"
29'	330	1/4"	3/16"	3/16"	1/8"	1/4"	3/16"	3/16"	1/8"
30'	330	1/4"	3/16"	3/16"	1/8"	1/4"	3/16"	3/16"	1/8"
31'	330	1/4"	3/16"	3/16"	1/8"	1/4"	3/16"	3/16"	1/8"
32'	330	1/4"	3/16"	3/16"	1/8"	1/4"	3/16"	3/16"	1/8"
33'	340	3/8"	1/4"	5/16"	1/4"	3/8"	1/4"	5/16"	1/4"
34'	340	3/8"	1/4"	5/16"	1/4"	3/8"	1/4"	5/16"	1/4"
35'	340	7/16"	5/16"	3/8"	1/4"	7/16"	5/16"	3/8"	1/4"
36'	340	7/16"	5/16"	3/8"	1/4"	7/16"	5/16"	3/8"	1/4"
37'	340	7/16"	5/16"	3/8"	1/4"	7/16"	5/16"	3/8"	1/4"
38'	340	7/16"	5/16"	3/8"	1/4"	7/16"	5/16"	3/8"	1/4"
39'	351	5/8"	7/16"	1/2"	3/8"	5/8"	7/16"	1/2"	3/8"
40'	351	5/8"	7/16"	1/2"	3/8"	5/8"	7/16"	1/2"	3/8"
41'	351	5/8"	7/16"	1/2"	3/8"	5/8"	7/16"	1/2"	3/8"
42'	351	5/8"	7/16"	9/16"	3/8"	5/8"	7/16"	9/16"	3/8"
43'	362	3/4"	1/2"	5/8"	7/16"	3/4"	1/2"	5/8"	7/16"
44'	362	3/4"	9/16"	5/8"	7/16"	3/4"	9/16"	5/8"	7/16"
45'	362	3/4"	9/16"	5/8"	7/16"	3/4"	9/16"	5/8"	7/16"
46'	372	1"	11/16"	13/16"	9/16"	1"	11/16"	13/16"	9/16"
47'	372	1"	11/16"	13/16"	9/16"	1"	11/16"	13/16"	9/16"
48'	383	1-3/16"	13/16"	1"	11/16"	1-3/16"	13/16"	1"	11/16"
49'	383	1-3/16"	7/8"	1"	11/16"	1-3/16"	7/8"	1"	11/16"
50'	383	1-1/4"	7/8"	1"	11/16"	1-1/4"	7/8"	1"	11/16"

32'-10" ROADWAY
GIRDER SPAN LENGTH (HS20 & HS20 MILITARY LOADING)

Superstructure

Span Length ℄ to ℄ Bent	Allowable Span Length For P/S Concrete Double-Tee Girder Spans					
	Type 30		Type 22		Type 16	
	Span Length	Girder Seq. No.	Span Length	Girder Seq. No.	Span Length	Girder Seq. No.
20'	20' thru 26'	320	20' & 21'	220	20' thru 23'	130
21'						
22'			22' thru 28'	230		
23'						
24'					24' thru 28'	140
25'						
26'						
27'	27' thru 33'	330				
28'						
29'			29' thru 33'	240	29'	151
30'						
31'						
32'						
33'						
34'	34' thru 39'	340	34' thru 36'	251		
35'						
36'						
37'			37' & 38'	262		
38'						
39'						
40'	40' thru 43'	351				
41'						
42'						
43'						
44'	44' & 45'	362				
45'						
46'	46' thru 48'	372				
47'						
48'						
49'	49' thru 51'	383				
50'						
51'						

Note:
The maximum span lengths shown for P/S Double-Tee Girders are based on a minimum of 2-spans (continuous) being used. If one of these P/S Double-Tee Girders is used as one simple span, then the span lengths should be reduced from the maximum allowable span shown, and the girder design should be checked.

32'-10" ROADWAY - BEAM TYPE 16 (5 GIRDER) SECTION PROPERTIES & STRAND ARRANGEMENT

Superstructure

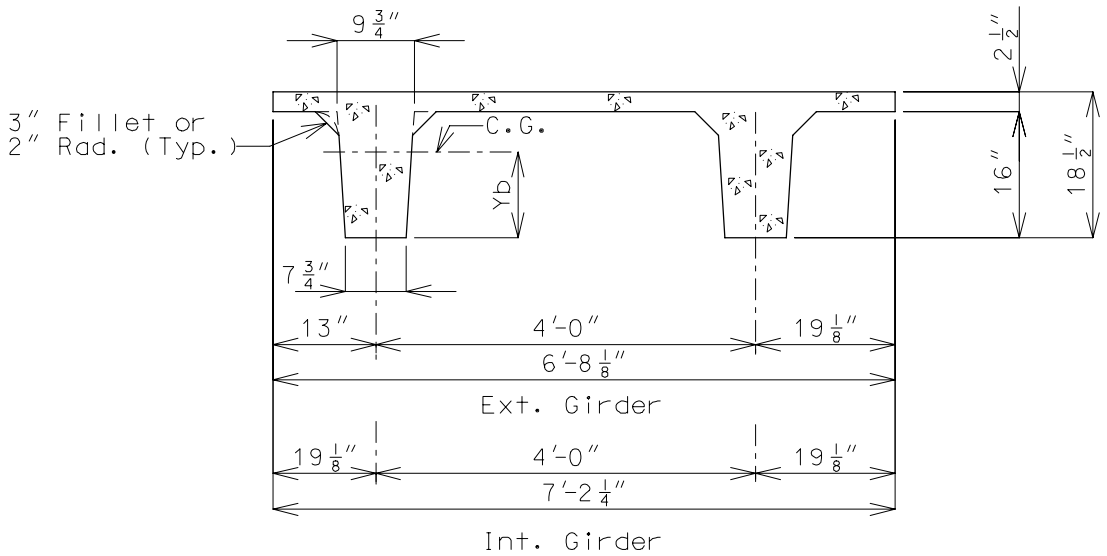

A = 480.3 sq. in.
Yb = 12.04 in.
I = 15,396 in.^{4}
EXTERIOR GIRDER

A = 495.6 sq. in.
Yb = 12.20 in.
I = 15,807 in.^{4}
INTERIOR GIRDER

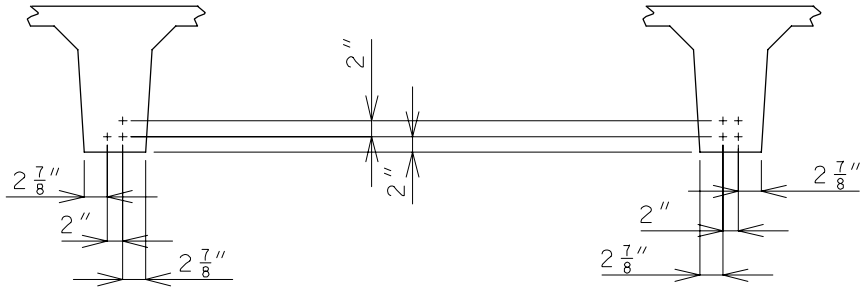

GIRDER SEQ. NO. 130
(3 STRANDS - 0 DRAPED)

GIRDER SEQ. NO. 140
(4 STRANDS - 0 DRAPED)

32'-10" ROADWAY - BEAM TYPE 16 (5 GIRDER)
SECTION PROPERTIES & STRAND ARRANGEMENT (CONT.)

Superstructure

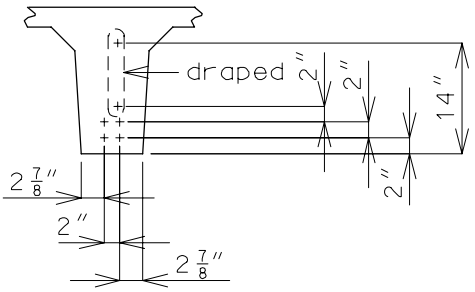

GIRDER SEQ. NO. 151
(5 STRANDS - 1 DRAPED)

Note: Location of draped strands shown in top of stem are at end of girder and draped strands in bott. of stem are at ℄.

32'-10" ROADWAY - BEAM TYPE 16 (HS20 & HS20 MILITARY) GIRDER REACTIONS

Superstructure

Span Length ℄ to ℄ Bent	Girder Seq. No.	Dead Load Reaction, kips per stem		
		Interior Girder	Exterior Girder	
			Int. Stem	Ext. Stem
20'	130	6.25	6.75	7.65
21'	130	6.57	7.11	8.05
22'	130	6.91	7.47	8.46
23'	130	7.24	7.82	8.86
24'	140	7.57	8.18	9.27
25'	140	7.90	8.54	9.67
26'	140	8.23	8.89	10.08
27'	140	8.56	9.25	10.48
28'	140	8.84	9.61	10.89
29'	151	9.22	9.97	11.29

Reactions are DL1 + DL2 from BR202 (Simple Span).

32'-10" ROADWAY - BEAM TYPE 16 (HS20 & HS20 MILITARY) GIRDER CAMBER

Superstructure

Span Length ℄ to ℄ Bent	Girder Seq. No.	Interior Girder				Exterior Girder			
		Girder Camber without Slab		Girder Camber with Slab		Girder Camber without Slab		Girder Camber with Slab	
		1/2 pt.	1/4 pt.	1/2 pt.	1/4 pt.	1/2 pt.	1/4 pt.	1/2 pt.	1/4 pt.
20'	130	1/4"	3/16"	1/4"	3/16"	1/4"	3/16"	1/4"	3/16"
21'	130	5/16"	3/16"	1/4"	3/16"	5/16"	3/16"	1/4"	3/16"
22'	130	5/16"	1/4"	1/4"	3/16"	5/16"	1/4"	5/16"	3/16"
23'	130	5/16"	1/4"	5/16"	3/16"	5/16"	1/4"	5/16"	3/16"
24'	140	1/2"	3/8"	7/16"	5/16"	1/2"	3/8"	7/16"	5/16"
25'	140	1/2"	3/8"	7/16"	5/16"	1/2"	3/8"	7/16"	5/16"
26'	140	9/16"	3/8"	1/2"	3/8"	9/16"	3/8"	1/2"	3/8"
27'	140	9/16"	7/16"	1/2"	3/8"	9/16"	7/16"	1/2"	3/8"
28'	140	5/8"	7/16"	1/2"	3/8"	5/8"	7/16"	1/2"	3/8"
29'	151	3/4"	9/16"	11/16"	1/2"	3/4"	9/16"	11/16"	1/2"

32'-10" ROADWAY - BEAM TYPE 22 (5 GIRDER) SECTION PROPERTIES & STRAND ARRANGEMENT

Superstructure

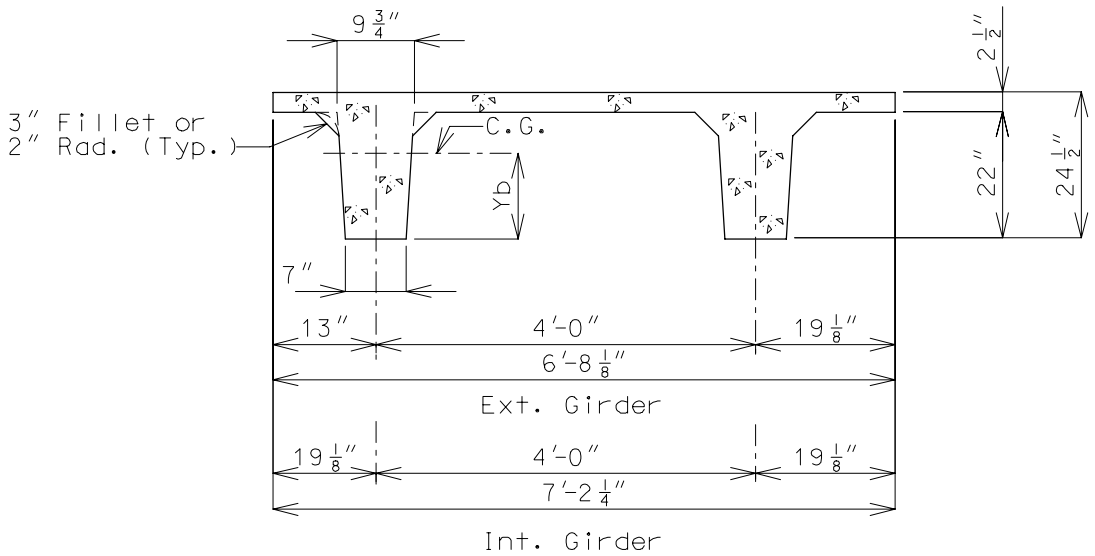

A = 568.8 sq. in.
Yb = 15.70 in.
I = 32,440 in.^{4}
EXTERIOR GIRDER

A = 584.1 sq. in.
Yb = 15.90 in.
I = 33,297 in.^{4}
INTERIOR GIRDER

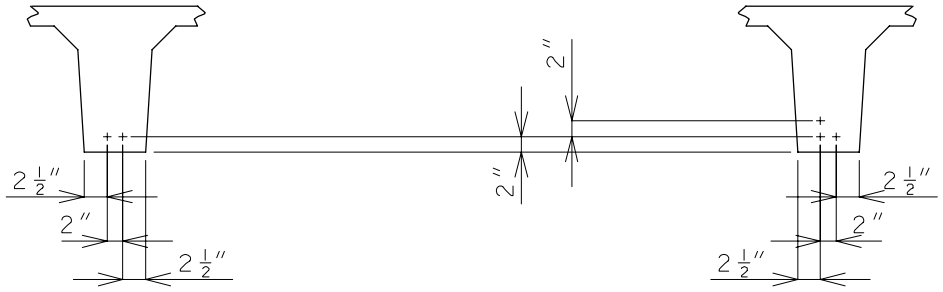

GIRDER SEQ. NO. 220
(2 STRANDS - 0 DRAPED)

GIRDER SEQ. NO. 230
(3 STRANDS - 0 DRAPED)

32'-10" ROADWAY - BEAM TYPE 22
SECTION PROPERTIES & STRAND ARRANGEMENT (CONT.)

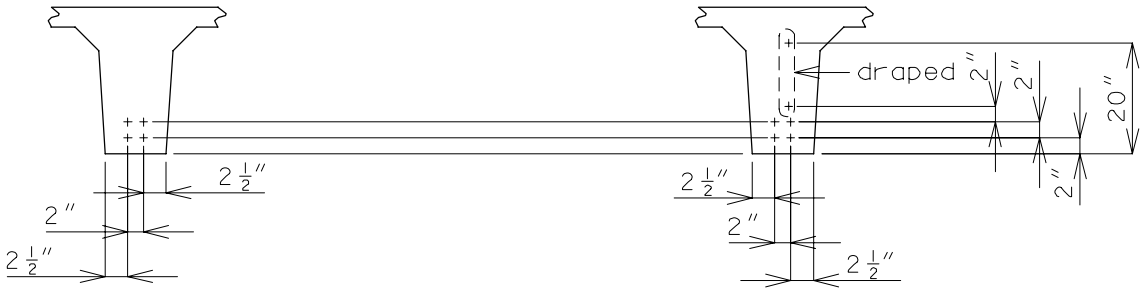

GIRDER SEQ. NO. 240
(4 STRANDS - 0 DRAPED)

GIRDER SEQ. NO. 251
(5 STRANDS - 1 DRAPED)

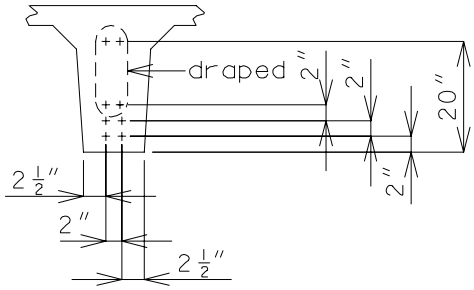

GIRDER SEQ. NO. 262
(6 STRANDS - 2 DRAPED)

Note: Location of draped strands shown in top of stem are at end of girder and draped strands in bott. of stem are at ℄.

32'-10" ROADWAY - BEAM TYPE 22 (HS20 & HS20 MILITARY) GIRDER REACTIONS

Superstructure

Span Length ℄ to ℄ Bent	Girder Seq. No.	Dead Load Reaction, kips per stem		
		Interior Girder	Exterior Girder	
			Int. Stem	Ext. Stem
20'	220	6.67	7.17	8.01
21'	220	7.02	7.55	8.44
22'	230	7.38	7.93	8.87
23'	230	7.74	8.31	9.30
24'	230	8.09	8.70	9.72
25'	230	8.45	9.08	10.15
26'	230	8.80	9.46	10.58
27'	230	9.16	9.84	11.00
28'	230	9.51	10.22	11.43
29'	240	9.86	10.61	11.86
30'	240	10.22	10.99	12.28
31'	240	10.57	11.37	12.71
32'	240	10.93	11.75	13.14
33'	240	11.29	12.13	13.56
34'	251	11.64	12.51	13.99
35'	251	12.00	12.90	14.42
36'	251	12.35	13.28	14.84
37'	262	12.69	13.66	15.26
38'	262	13.05	14.04	15.68

Reactions are DL1 + DL2 from BR202 (Simple Span).

32'-10" ROADWAY - BEAM TYPE 22 (HS20 & HS20 MILITARY) GIRDER CAMBER

Superstructure

Span Length ℄ to ℄ Bent	Girder Seq. No.	Interior Girder				Exterior Girder			
		Girder Camber without Slab		Girder Camber with Slab		Girder Camber without Slab		Girder Camber with Slab	
		1/2 pt.	1/4 pt.	1/2 pt.	1/4 pt.	1/2 pt.	1/4 pt.	1/2 pt.	1/4 pt.
20'	220	1/8"	1/16"	1/8"	1/16"	1/8"	1/16"	1/8"	1/16"
21'	220	1/8"	1/16"	1/8"	1/16"	1/8"	1/16"	1/8"	1/16"
22'	230	3/16"	1/8"	3/16"	1/8"	3/16"	1/8"	3/16"	1/8"
23'	230	1/4"	3/16"	3/16"	1/8"	1/4"	3/16"	3/16"	1/4"
24'	230	1/4"	3/16"	1/4"	3/16"	1/4"	3/16"	1/4"	3/16"
25'	230	1/4"	3/16"	1/4"	3/16"	1/4"	3/16"	1/4"	3/16"
26'	230	1/4"	3/16"	1/4"	3/16"	1/4"	3/16"	1/4"	3/16"
27'	230	5/16"	3/16"	1/4"	3/16"	5/16"	3/16"	1/4"	3/16"
28'	230	5/16"	3/16"	1/4"	3/16"	5/16"	3/16"	1/4"	3/16"
29'	240	7/16"	5/16"	3/8"	5/16"	7/16"	5/16"	3/8"	5/16"
30'	240	1/2"	5/16"	7/16"	5/16"	1/2"	5/16"	7/16"	5/16"
31'	240	1/2"	3/8"	7/16"	5/16"	1/2"	3/8"	7/16"	5/16"
32'	240	1/2"	3/8"	7/16"	5/16"	1/2"	3/8"	7/16"	5/16"
33'	240	9/16"	3/8"	7/16"	5/16"	9/16"	3/8"	7/16"	5/16"
34'	251	11/16"	1/2"	5/8"	7/16"	11/16"	1/2"	5/8"	7/16"
35'	251	11/16"	1/2"	5/8"	7/16"	11/16"	1/2"	5/8"	7/16"
36'	251	3/4"	1/2"	5/8"	7/16"	3/4"	1/2"	5/8"	7/16"
37'	262	7/8"	5/8"	3/4"	9/16"	7/8"	5/8"	3/4"	9/16"
38'	262	15/16"	11/16"	13/16"	9/16"	15/16"	11/16"	13/16"	9/16"

32'-10" ROADWAY - BEAM TYPE 30 (5 GIRDER) SECTION PROPERTIES & STRAND ARRANGEMENT

Superstructure

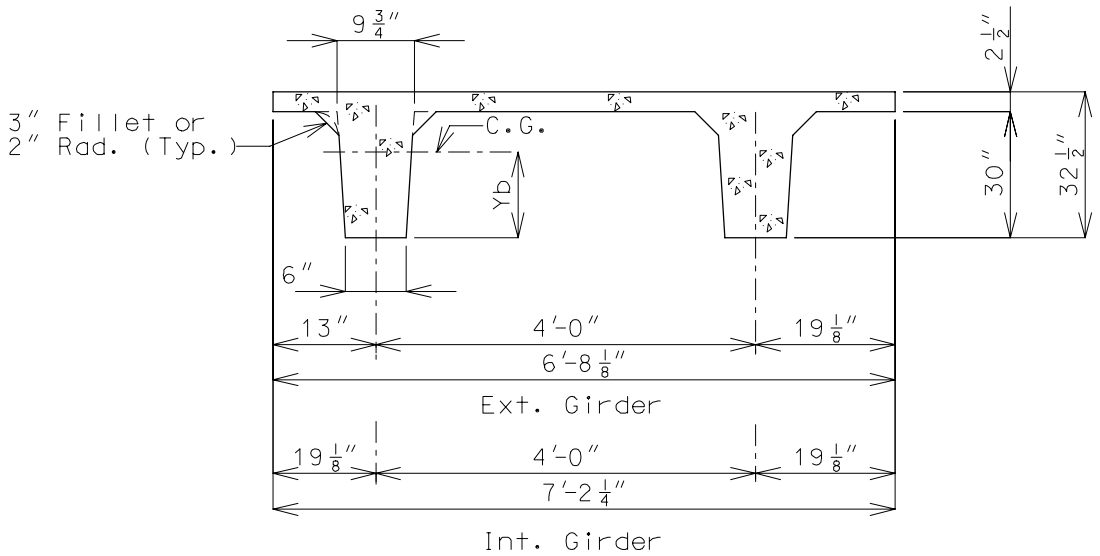

A = 672.8 sq. in.
Yb = 20.67 in.
I = 66,776 in.^{4}
EXTERIOR GIRDER

A = 688.1 sq. in.
Yb = 20.91 in.
I = 68,458 in.^{4}
INTERIOR GIRDER

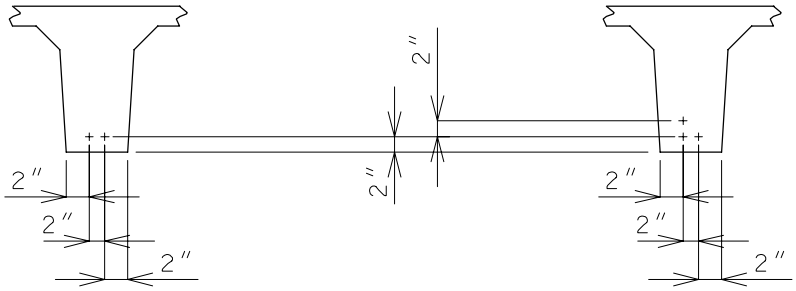

GIRDER SEQ. NO. 320
(2 STRANDS - 0 DRAPED)

GIRDER SEQ. NO. 330
(3 STRANDS - 0 DRAPED)

32'-10" ROADWAY - BEAM TYPE 30
SECTION PROPERTIES & STRAND ARRANGEMENT (CONT.)

Superstructure

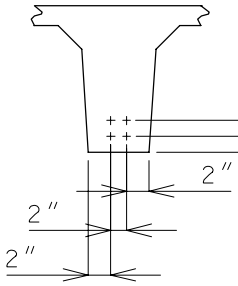

GIRDER SEQ. NO. 340
(4 STRANDS - 0 DRAPED)

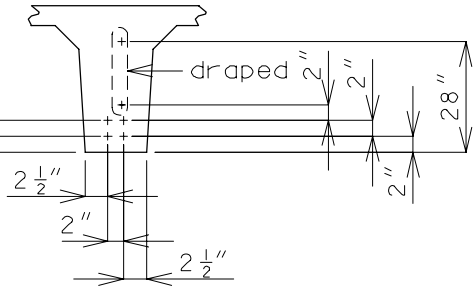

GIRDER SEQ. NO. 351
(5 STRANDS - 1 DRAPED)

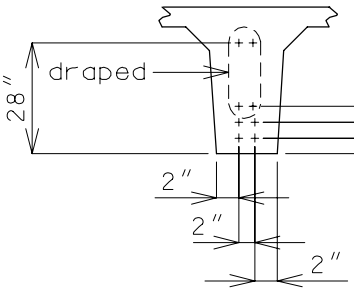

GIRDER SEQ. NO. 362
(6 STRANDS - 2 DRAPED)

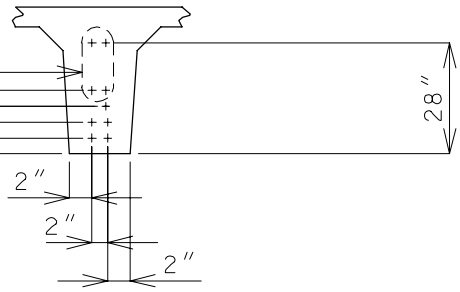

GIRDER SEQ. NO. 372
(7 STRANDS - 2 DRAPED)

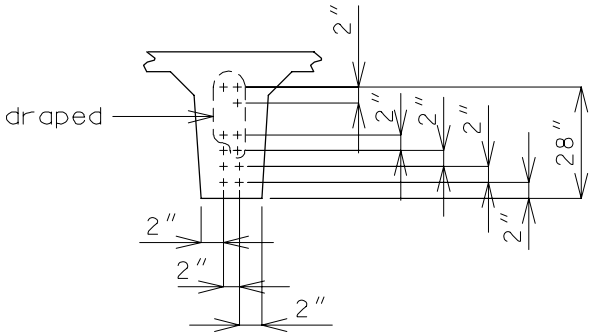

GIRDER SEQ. NO. 383
(8 STRANDS - 3 DRAPED)

Note: Location of draped strands shown in top of stem are at end of girder and draped strands in bott. of stem are at ℄.

32'-10" ROADWAY - BEAM TYPE 30 (HS20 & HS20 MILITARY) GIRDER REACTIONS

Superstructure

Span Length ℄ to ℄ Bent	Girder Seq. No.	Dead Load Reaction, kips per stem		
		Interior Girder	Exterior Girder	
			Int. Stem	Ext. Stem
20'	320	7.09	7.58	8.41
21'	320	7.47	7.99	8.87
22'	320	7.86	8.40	9.32
23'	320	8.24	8.81	9.78
24'	320	8.62	9.22	10.23
25'	320	9.00	9.62	10.68
26'	320	9.38	10.03	11.14
27'	330	9.77	10.44	11.59
28'	330	10.15	10.85	12.05
29'	330	10.53	11.26	12.50
30'	330	10.92	11.67	12.95
31'	330	11.29	12.08	13.41
32'	330	11.68	12.49	13.86
33'	330	12.07	12.90	14.31
34'	340	12.44	13.30	14.77
35'	340	12.83	13.71	15.22
36'	340	13.20	14.12	15.68
37'	340	13.59	14.53	16.13
38'	340	13.98	14.94	16.58
39'	340	14.35	15.35	17.04
40'	351	14.74	15.76	17.49
41'	351	15.12	16.17	17.95
42'	351	15.50	16.58	18.40
43'	351	15.89	16.99	18.85
44'	362	16.27	17.39	19.31
45'	362	16.65	17.80	19.76
46'	372	17.03	18.20	20.20
47'	372	17.40	18.60	20.65
48'	372	17.79	18.99	21.09
49'	383	18.18	19.42	21.56
50'	383	18.56	19.83	22.01
51'	383	18.93	20.23	22.46

Reactions are DL1 + DL2 from BR202 (Simple Span).

32'-10" ROADWAY - BEAM TYPE 30 (HS20 & HS20 MILITARY) GIRDER CAMBER

Superstructure

Span Length ℄ to ℄ Bent	Girder Seq. No.	Interior Girder				Exterior Girder			
		Girder Camber without Slab		Girder Camber with Slab		Girder Camber without Slab		Girder Camber with Slab	
		1/2 pt.	1/4 pt.	1/2 pt.	1/4 pt.	1/2 pt.	1/4 pt.	1/2 pt.	1/4 pt.
20'	320	1/16"	1/16"	1/16"	1/16"	1/16"	1/16"	1/16"	1/16"
21'	320	1/16"	1/16"	1/16"	1/16"	1/16"	1/16"	1/16"	1/16"
22'	320	1/8"	1/16"	1/16"	1/16"	1/8"	1/16"	1/16"	1/16"
23'	320	1/8"	1/16"	1/16"	1/16"	1/8"	1/16"	1/16"	1/16"
24'	320	1/8"	1/16"	1/8"	1/16"	1/8"	1/16"	1/8"	1/16"
25'	320	1/8"	1/16"	1/8"	1/16"	1/8"	1/16"	1/8"	1/16"
26'	320	1/8"	1/16"	1/8"	1/16"	1/8"	1/16"	1/8"	1/16"
27'	330	3/16"	1/8"	3/16"	1/8"	3/16"	1/8"	3/16"	1/8"
28'	330	3/16"	1/8"	3/16"	1/8"	3/16"	1/8"	3/16"	1/8"
29'	330	1/4"	3/16"	3/16"	1/8"	1/4"	3/16"	3/16"	1/8"
30'	330	1/4"	3/16"	3/16"	1/8"	1/4"	3/16"	3/16"	1/8"
31'	330	1/4"	3/16"	3/16"	1/8"	1/4"	3/16"	3/16"	1/8"
32'	330	1/4"	3/16"	1/4"	1/8"	1/4"	3/16"	1/4"	1/8"
33'	330	1/4"	3/16"	1/4"	3/16"	1/4"	3/16"	1/4"	3/16"
34'	340	7/16"	5/16"	3/8"	1/4"	7/16"	5/16"	3/8"	1/4"
35'	340	7/16"	5/16"	3/8"	1/4"	7/16"	5/16"	3/8"	1/4"
36'	340	7/16"	5/16"	3/8"	1/4"	7/16"	5/16"	3/8"	1/4"
37'	340	7/16"	5/16"	3/8"	1/4"	7/16"	5/16"	3/8"	1/4"
38'	340	7/16"	5/16"	3/8"	1/4"	7/16"	5/16"	3/8"	1/4"
39'	340	1/2"	5/16"	3/8"	1/4"	1/2"	5/16"	3/8"	1/4"
40'	351	5/8"	7/16"	1/2"	3/8"	5/8"	7/16"	1/2"	3/8"
41'	351	5/8"	7/16"	9/16"	3/8"	5/8"	7/16"	9/16"	3/8"
42'	351	11/16"	7/16"	9/16"	3/8"	11/16"	7/16"	9/16"	3/8"
43'	351	11/16"	1/2"	9/16"	3/8"	11/16"	1/2"	9/16"	3/8"
44'	362	13/16"	9/16"	5/8"	7/16"	13/16"	9/16"	5/8"	7/16"
45'	362	13/16"	9/16"	5/8"	7/16"	13/16"	9/16"	5/8"	7/16"
46'	372	1"	11/16"	13/16"	9/16"	1"	11/16"	13/16"	9/16"
47'	372	1"	11/16"	13/16"	9/16"	1"	11/16"	13/16"	9/16"
48'	372	1"	3/4"	13/16"	9/16"	1"	3/4"	13/16"	9/16"
49'	383	1-3/16"	7/8"	1"	3/4"	1-3/16"	7/8"	1"	3/4"
50'	383	1-1/4"	7/8"	1"	3/4"	1-1/4"	7/8"	1"	3/4"
51'	383	1-1/4"	7/8"	1"	3/4"	1-1/4"	7/8"	1"	3/4"

36'-10" ROADWAY
GIRDER SPAN LENGTH (HS20 & HS20 MILITARY LOADING)

Superstructure

Span Length ℄ to ℄ Bent	Allowable Span Length For P/S Concrete Double-Tee Girder Spans					
	Type 30		Type 22		Type 16	
	Span Length	Girder Seq. No.	Span Length	Girder Seq. No.	Span Length	Girder Seq. No.
20'	20' thru 30'	320	20' thru 30'	230	20' thru 24'	130
21'						
22'						
23'						
24'						
25'					25' thru 28'	140
26'						
27'						
28'						
29'					29'	151
30'						
31'	31' thru 35'	330	31' thru 35'	240		
32'						
33'						
34'						
35'						
36'	36' thru 41'	340	36' thru 38'	251		
37'						
38'						
39'			39' & 40'	262		
40'						
41'						
42'	42' thru 45'	351				
43'						
44'						
45'						
46'	46' & 47'	362				
47'						
48'	48' thru 50'	372				
49'						
50'						
51'	51' thru 53'	383				
52'						
53'						

Note:
The maximum span lengths shown for P/S Double-Tee Girders are based on a minimum of 2-spans (continuous) being used. If one of these P/S Double-Tee Girders is used as one simple span, then the span lengths should be reduced from the maximum allowable span shown, and the girder design should be checked.

36'-10" ROADWAY - BEAM TYPE 16 (6 GIRDER) SECTION PROPERTIES & STRAND ARRANGEMENT

Superstructure

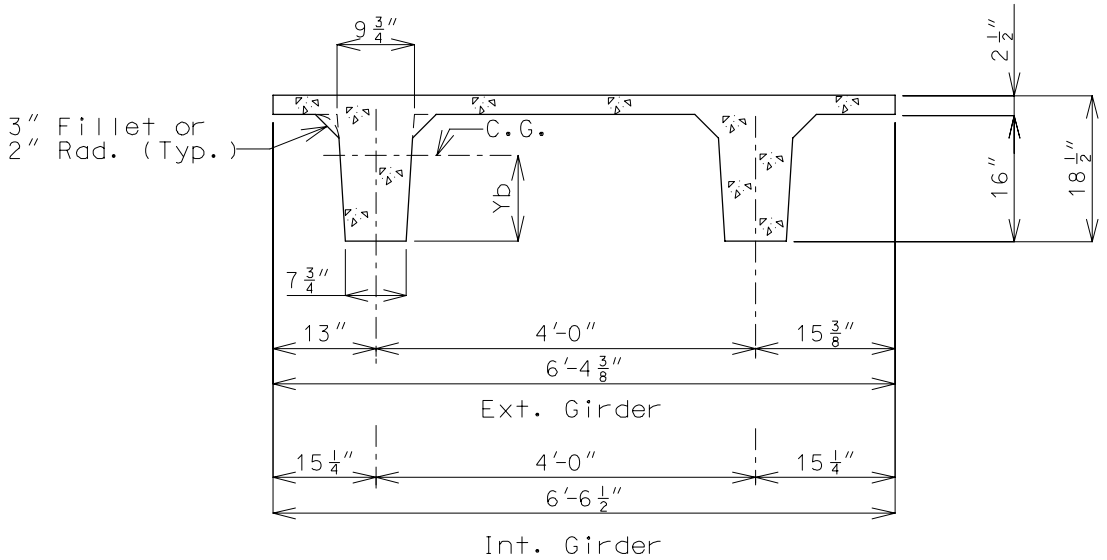

A = 470.9 sq. in.
Yb = 11.93 in.
I = 15,131 in.^{4}
EXTERIOR GIRDER

A = 476.3 sq. in.
Yb = 12.00 in.
I = 15,282 in.^{4}
INTERIOR GIRDER

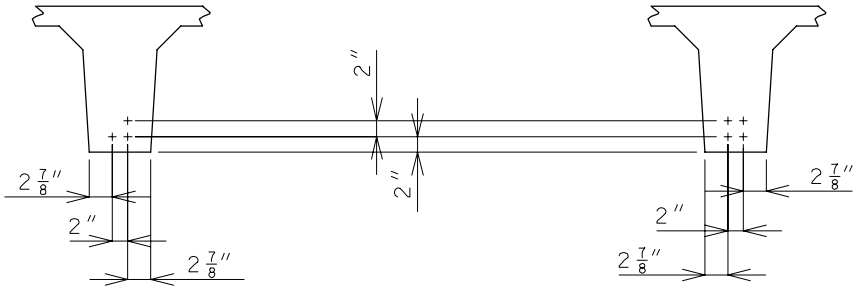

GIRDER SEQ. NO. 130
(3 STRANDS - 0 DRAPED)

GIRDER SEQ. NO. 140
(4 STRANDS - 0 DRAPED)

36'-10" ROADWAY - BEAM TYPE 16 (6 GIRDER)
SECTION PROPERTIES & STRAND ARRANGEMENT (CONT.)

Superstructure

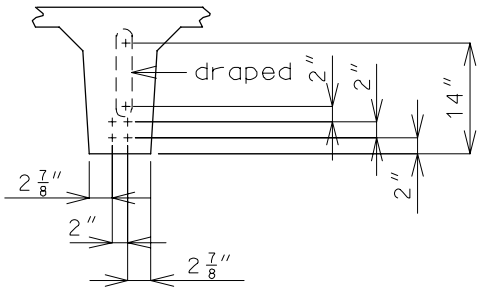

GIRDER SEQ. NO. 151
(5 STRANDS - 1 DRAPED)

Note: Location of draped strands shown in top of stem are at end of girder and draped strands in bott. of stem are at ℄.

36'-10" ROADWAY - BEAM TYPE 16 (HS20 & HS20 MILITARY) GIRDER REACTIONS

Superstructure

Span Length ℄ to ℄ Bent	Girder Seq. No.	Dead Load Reaction, kips per stem		
		Interior Girder	Exterior Girder	
			Int. Stem	Ext. Stem
20'	130	5.76	6.33	7.70
21'	130	6.07	6.67	8.10
22'	130	6.37	7.00	8.51
23'	130	6.68	7.34	8.92
24'	130	6.98	7.67	9.33
25'	140	7.29	8.01	9.73
26'	140	7.60	8.34	10.14
27'	140	7.90	8.68	10.55
28'	140	8.20	9.02	10.96
29'	151	8.51	9.35	11.36

Reactions are DL1 + DL2 from BR202 (Simple Span).

36'-10" ROADWAY - BEAM TYPE 16 (HS20 & HS20 MILITARY) GIRDER CAMBER

Superstructure

Span Length ℄ to ℄ Bent	Girder Seq. No.	Interior Girder				Exterior Girder			
		Girder Camber without Slab		Girder Camber with Slab		Girder Camber without Slab		Girder Camber with Slab	
		1/2 pt.	1/4 pt.	1/2 pt.	1/4 pt.	1/2 pt.	1/4 pt.	1/2 pt.	1/4 pt.
20'	130	1/4"	3/16"	1/4"	3/16"	1/4"	3/16"	1/4"	3/16"
21'	130	5/16"	3/16"	1/4"	3/16"	5/16"	3/16"	1/4"	3/16"
22'	130	5/16"	1/4"	5/16"	3/16"	5/16"	1/4"	5/16"	3/16"
23'	130	5/16"	1/4"	5/16"	3/16"	5/16"	1/4"	5/16"	3/16"
24'	140	3/8"	1/4"	5/16"	1/4"	3/8"	1/4"	5/16"	1/4"
25'	140	9/16"	3/8"	1/2"	5/16"	9/16"	3/8"	1/2"	5/16"
26'	140	9/16"	3/8"	1/2"	3/8"	9/16"	3/8"	1/2"	3/8"
27'	140	5/8"	7/16"	1/2"	3/8"	5/8"	7/16"	1/2"	3/8"
28'	140	5/8"	7/16"	9/16"	3/8"	5/8"	7/16"	9/16"	3/8"
29'	151	3/4"	9/16"	11/16"	1/2"	3/4"	9/16"	11/16"	1/2"

36'-10" ROADWAY - BEAM TYPE 22 (6 GIRDER)
SECTION PROPERTIES & STRAND ARRANGEMENT

Superstructure

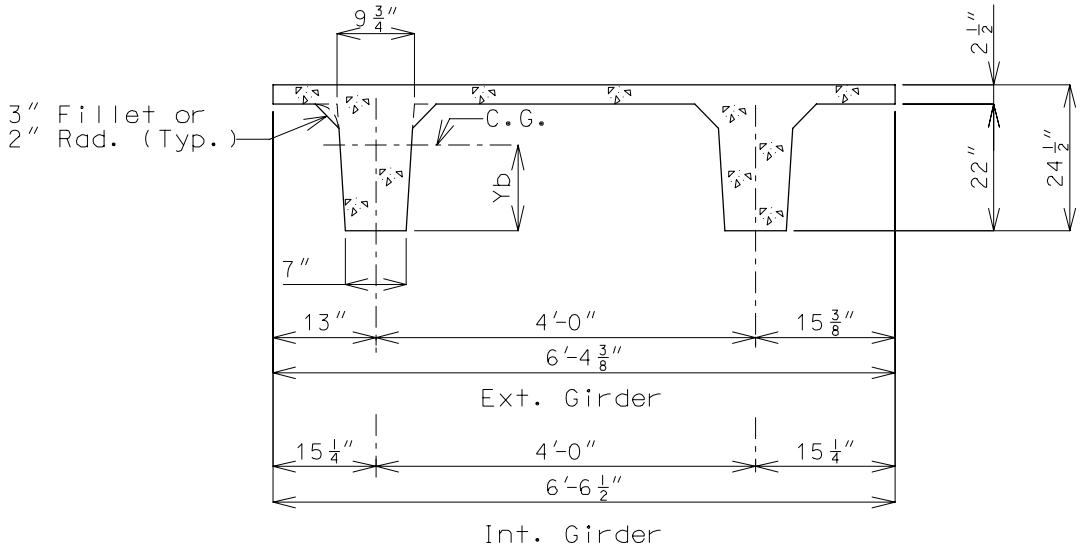

A = 559.4 sq. in.
Yb = 15.58 in.
I = 31,893 in.^{4}
EXTERIOR GIRDER

A = 564.8 sq. in.
Yb = 15.65 in.
I = 32,205 in.^{4}
INTERIOR GIRDER

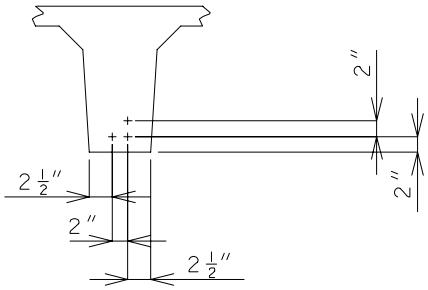

GIDERS SEQ. NO. 230
(3 STRANDS - 0 DRAPED)

36'-10" ROADWAY - BEAM TYPE 22
SECTION PROPERTIES & STRAND ARRANGEMENT (CONT.)

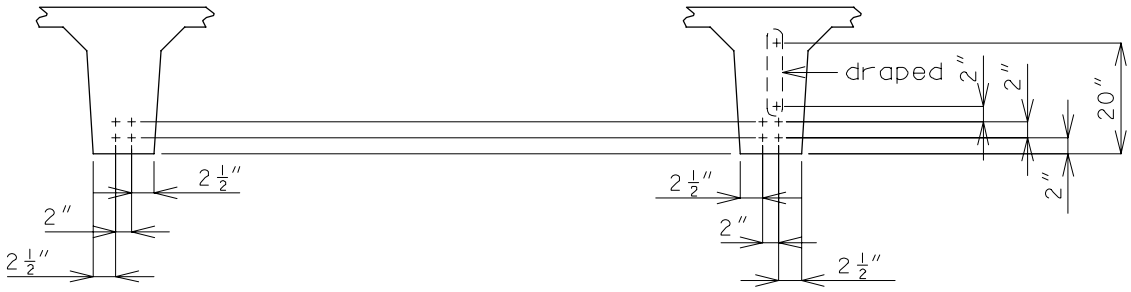

GIRDER SEQ. NO. 240
(4 STRANDS - 0 DRAPED)

GIRDER SEQ. NO. 251
(5 STRANDS - 1 DRAPED)

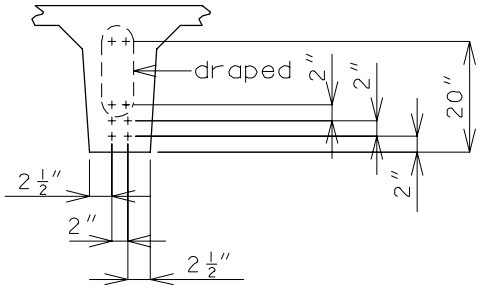

GIRDER SEQ. NO. 262
(6 STRANDS - 2 DRAPED)

Note: Location of draped strands shown in top of stem are at end of girder and draped strands in bott. of stem are at ℄.

36'-10" ROADWAY - BEAM TYPE 22 (HS20 & HS20 MILITARY) GIRDER REACTIONS

Superstructure

Span Length ℄ to ℄ Bent	Girder Seq. No.	Dead Load Reaction, kips per stem		
		Interior Girder	Exterior Girder	
			Int. Stem	Ext. Stem
20'	230	6.16	6.73	8.19
21'	230	6.49	7.08	8.63
22'	230	6.82	7.44	9.06
23'	230	7.14	7.80	9.50
24'	230	7.47	8.16	9.94
25'	230	7.81	8.52	10.37
26'	230	8.13	8.88	10.81
27'	230	8.46	9.23	11.25
28'	230	8.78	9.59	11.68
29'	230	9.12	9.95	12.12
30'	230	9.45	10.31	12.56
31'	240	9.77	10.67	12.99
32'	240	10.10	11.03	13.43
33'	240	10.43	11.38	13.86
34'	240	10.76	11.74	14.30
35'	240	11.08	12.10	14.74
36'	251	11.41	12.46	15.17
37'	251	11.74	12.82	15.60
38'	251	12.06	13.17	16.02
39'	262	12.39	13.53	16.46
40'	262	12.72	13.88	16.89

Reactions are DL1 + DL2 from BR202 (Simple Span).

36'-10" ROADWAY - BEAM TYPE 22 (HS20 & HS20 MILITARY) GIRDER CAMBER

Superstructure

Span Length ℄ to ℄ Bent	Girder Seq. No.	Interior Girder				Exterior Girder			
		Girder Camber without Slab		Girder Camber with Slab		Girder Camber without Slab		Girder Camber with Slab	
		1/2 pt.	1/4 pt.	1/2 pt.	1/4 pt.	1/2 pt.	1/4 pt.	1/2 pt.	1/4 pt.
20'	230	3/16"	1/8"	3/16"	1/8"	3/16"	1/8"	3/16"	1/8"
21'	230	3/16"	1/8"	3/16"	1/8"	3/16"	1/8"	3/16"	1/8"
22'	230	1/4"	3/16"	3/16"	1/8"	1/4"	3/16"	3/16"	1/8"
23'	230	1/4"	3/16"	3/16"	1/8"	1/4"	3/16"	3/16"	1/8"
24'	230	1/4"	3/16"	1/4"	3/16"	1/4"	3/16"	1/4"	3/16"
25'	230	1/4"	3/16"	1/4"	3/16"	1/4"	3/16"	1/4"	3/16"
26'	230	5/16"	3/16"	1/4"	3/16"	5/16"	3/16"	1/4"	3/16"
27'	230	5/16"	3/16"	1/4"	3/16"	5/16"	3/16"	1/4"	3/16"
28'	230	5/16"	1/4"	1/4"	3/16"	5/16"	1/4"	1/4"	3/16"
29'	230	5/16"	1/4"	5/16"	3/16"	5/16"	1/4"	5/16"	3/16"
30'	230	3/8"	1/4"	5/16"	3/16"	3/8"	1/4"	5/16"	3/16"
31'	240	1/2"	3/8"	7/16"	5/16"	1/2"	3/8"	7/16"	5/16"
32'	240	9/16"	3/8"	1/2"	5/16"	9/16"	3/8"	1/2"	5/16"
33'	240	9/16"	3/8"	1/2"	5/16"	9/16"	3/8"	1/2"	5/16"
34'	240	5/8"	7/16"	1/2"	3/8"	5/8"	7/16"	1/2"	3/8"
35'	240	5/8"	7/16"	1/2"	3/8"	5/8"	7/16"	1/2"	3/8"
36'	251	3/4"	9/16"	5/8"	7/16"	3/4"	9/16"	5/8"	7/16"
37'	251	13/16"	9/16"	11/16"	1/2"	13/16"	9/16"	11/16"	1/2"
38'	251	13/16"	9/16"	11/16"	1/2"	13/16"	9/16"	11/16"	1/2"
39'	262	1"	11/16"	13/16"	9/16"	1"	11/16"	13/16"	9/16"
40'	262	1"	3/4"	13/16"	5/8"	1"	3/4"	13/16"	5/8"

36'-10" ROADWAY - BEAM TYPE 30 (6 GIRDER) SECTION PROPERTIES & STRAND ARRANGEMENT

Superstructure

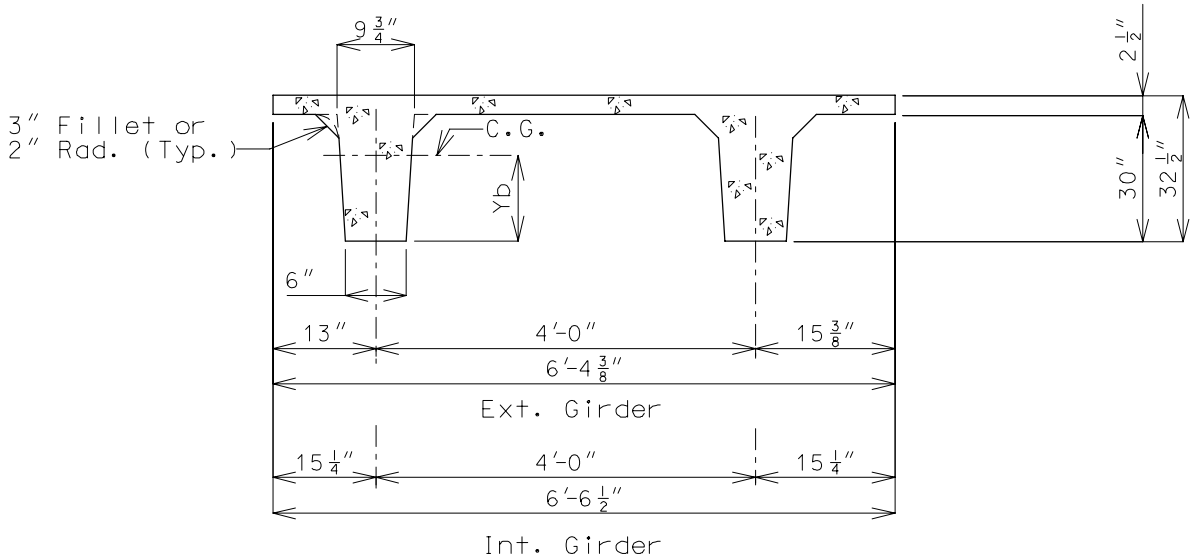

A = 663.4 sq. in.
Yb = 20.52 in.
I = 65,707 in.^{4}
EXTERIOR GIRDER

A = 668.8 sq. in.
Yb = 20.61 in.
I = 66,316 in.^{4}
INTERIOR GIRDER

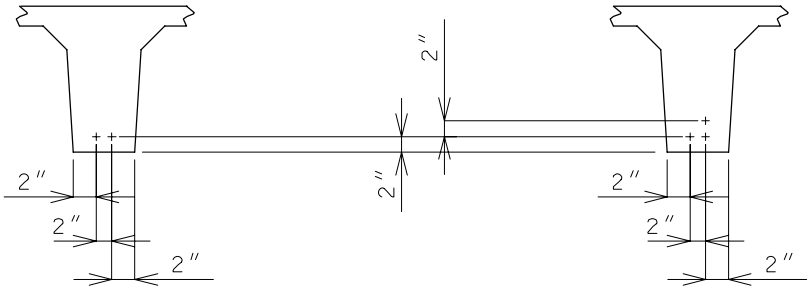

GIRDER SEQ. NO. 320
(2 STRANDS - 0 DRAPED)

GIRDER SEQ. NO. 330
(3 STRANDS - 0 DRAPED)

36'-10" ROADWAY - BEAM TYPE 30
SECTION PROPERTIES & STRAND ARRANGEMENT (CONT.)

Superstructure

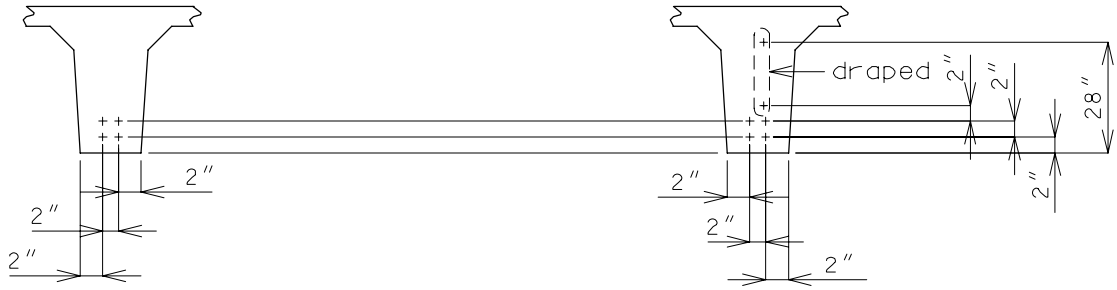

GIRDER SEQ. NO. 340
(4 STRANDS - 0 DRAPED)

GIRDER SEQ. NO. 351
(5 STRANDS - 1 DRAPED)

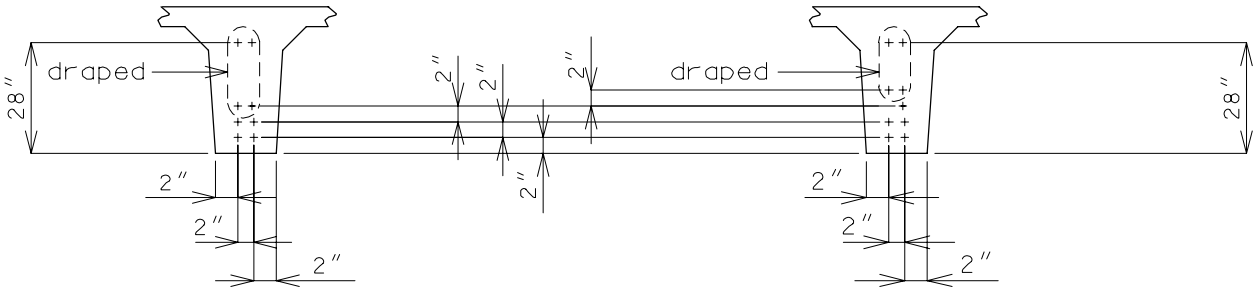

GIRDER SEQ. NO. 362
(6 STRANDS - 2 DRAPED)

GIRDER SEQ. NO. 372
(7 STRANDS - 2 DRAPED)

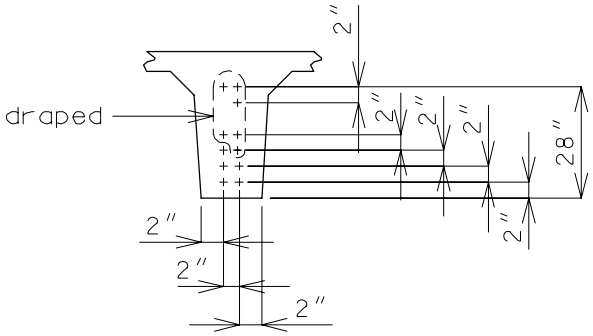

GIRDER SEQ. NO. 383
(8 STRANDS - 3 DRAPED)

Note: Location of draped strands shown in top of stem are at end of girder and draped strands in bott. of stem are at ℄.

36'-10" ROADWAY - BEAM TYPE 30 (HS20 & HS20 MILITARY) GIRDER REACTIONS

Superstructure

Span Length ℄ to ℄ Bent	Girder Seq. No.	Dead Load Reaction, kips per stem		
		Interior Girder	Exterior Girder	
			Int. Stem	Ext. Stem
20'	320	6.59	7.14	8.48
21'	320	6.95	7.53	8.94
22'	320	7.30	7.91	9.39
23'	320	7.65	8.30	9.85
24'	320	8.01	8.69	10.31
25'	320	8.37	9.07	10.77
26'	320	8.72	9.46	11.22
27'	320	9.08	9.84	11.68
28'	320	9.43	10.23	12.14
29'	320	9.79	10.61	12.60
30'	320	10.14	11.00	13.05
31'	330	10.50	11.38	13.51
32'	330	10.85	11.77	13.97
33'	330	11.20	12.15	14.43
34'	330	11.57	12.54	14.88
35'	330	11.92	12.92	15.34
36'	340	12.27	13.31	15.80
37'	340	12.63	13.69	16.26
38'	340	12.99	14.08	16.71
39'	340	13.34	14.47	17.17
40'	340	13.69	14.85	17.63
41'	340	14.06	15.24	18.09
42'	351	14.41	15.62	18.54
43'	351	14.76	16.01	19.00
44'	351	15.11	16.39	19.46
45'	351	15.48	16.78	19.92
46'	362	15.83	17.16	20.37
47'	362	16.32	17.71	21.10
48'	372	16.68	18.10	21.56
49'	372	17.04	18.48	22.02
50'	372	17.39	18.86	22.47
51'	383	17.75	19.26	22.92
52'	383	18.11	19.65	23.39
53'	383	18.47	20.04	23.85

Reactions are DL1 + DL2 from BR202 (Simple Span).

36'-10" ROADWAY - BEAM TYPE 30 (HS20 & HS20 MILITARY) GIRDER CAMBER

Superstructure

Span Length ℄ to ℄ Bent	Girder Seq. No.	Interior Girder				Exterior Girder			
		Girder Camber without Slab		Girder Camber with Slab		Girder Camber without Slab		Girder Camber with Slab	
		1/2 pt.	1/4 pt.	1/2 pt.	1/4 pt.	1/2 pt.	1/4 pt.	1/2 pt.	1/4 pt.
20'	320	1/16"	1/16"	1/16"	1/16"	1/16"	1/16"	1/16"	1/16"
21'	320	1/16"	1/16"	1/16"	1/16"	1/16"	1/16"	1/16"	1/16"
22'	320	1/8"	1/16"	1/16"	1/16"	1/8"	1/16"	1/16"	1/16"
23'	320	1/8"	1/16"	1/16"	1/16"	1/8"	1/16"	1/16"	1/16"
24'	320	1/8"	1/16"	1/8"	1/16"	1/8"	1/16"	1/8"	1/16"
25'	320	1/8"	1/16"	1/8"	1/16"	1/8"	1/16"	1/8"	1/16"
26'	320	1/8"	1/16"	1/8"	1/16"	1/8"	1/16"	1/8"	1/16"
27'	320	1/8"	1/16"	1/8"	1/16"	1/8"	1/16"	1/8"	1/16"
28'	320	1/8"	1/8"	1/8"	1/16"	1/8"	1/8"	1/8"	1/16"
29'	320	1/8"	1/8"	1/8"	1/16"	1/8"	1/8"	1/8"	1/16"
30'	320	1/8"	1/8"	1/8"	1/16"	1/8"	1/8"	1/8"	1/16"
31'	330	1/4"	3/16"	1/4"	3/16"	1/4"	3/16"	1/4"	3/16"
32'	330	1/4"	3/16"	1/4"	3/16"	1/4"	3/16"	1/4"	3/16"
33'	330	1/4"	3/16"	1/4"	3/16"	1/4"	3/16"	1/4"	3/16"
34'	330	5/16"	3/16"	1/4"	3/16"	5/16"	3/16"	1/4"	3/16"
35'	330	5/16"	3/16"	1/4"	3/16"	5/16"	3/16"	1/4"	3/16"
36'	340	7/16"	5/16"	3/8"	1/4"	7/16"	5/16"	3/8"	1/4"
37'	340	7/16"	5/16"	3/8"	1/4"	7/16"	5/16"	3/8"	1/4"
38'	340	1/2"	3/8"	7/16"	5/16"	1/2"	3/8"	7/16"	5/16"
39'	340	1/2"	3/8"	7/16"	5/16"	1/2"	3/8"	7/16"	5/16"
40'	340	1/2"	3/8"	7/16"	5/16"	1/2"	3/8"	7/16"	5/16"
41'	340	9/16"	3/8"	7/16"	5/16"	9/16"	3/8"	7/16"	5/16"
42'	351	11/16"	1/2"	9/16"	3/8"	11/16"	1/2"	9/16"	3/8"
43'	351	11/16"	1/2"	9/16"	3/8"	11/16"	1/2"	9/16"	3/8"
44'	351	11/16"	1/2"	9/16"	7/16"	11/16"	1/2"	9/16"	7/16"
45'	351	3/4"	1/2"	9/16"	7/16"	3/4"	1/2"	9/16"	7/16"
46'	362	7/8"	5/8"	3/4"	1/2"	7/8"	5/8"	3/4"	1/2"
47'	362	7/8"	5/8"	3/4"	1/2"	7/8"	5/8"	3/4"	1/2"
48'	372	1"	3/4"	7/8"	5/8"	1"	3/4"	7/8"	5/8"
49'	372	1-1/16"	3/4"	7/8"	5/8"	1-1/16"	3/4"	7/8"	5/8"
50'	372	1-1/16"	3/4"	7/8"	5/8"	1-1/16"	3/4"	7/8"	5/8"
51'	383	1-1/16"	3/4"	7/8"	5/8"	1-1/16"	3/4"	7/8"	5/8"
52'	383	1-5/16"	15/16"	1-1/16"	3/4"	1-5/16"	15/16"	1-1/16"	3/4"
53'	383	1-5/16"	15/16"	1-1/16"	3/4"	1-5/16"	15/16"	1-1/16"	3/4"

38'-10" ROADWAY
GIRDER SPAN LENGTH (HS20 & HS20 MILITARY LOADING)

Superstructure

Span Length ℄ to ℄ Bent	Allowable Span Length For P/S Concrete Double-Tee Girder Spans					
	Type 30		Type 22		Type 16	
	Span Length	Girder Seq. No.	Span Length	Girder Seq. No.	Span Length	Girder Seq. No.
20'	20' thru 28'	320	20' thru 29'	230	20' thru 23'	130
21'						
22'						
23'						
24'					24' thru 28'	140
25'						
26'						
27'						
28'						
29'	29' thru 34'	330			29'	151
30'			30' thru 34'	240		
31'						
32'						
33'						
34'						
35'	35' thru 40'	340	35' thru 37'	251		
36'						
37'						
38'			38' & 39'	262		
39'						
40'						
41'	41' thru 44'	351				
42'						
43'						
44'						
45'	45' & 46'	362				
46'						
47'	47' thru 49'	372				
48'						
49'						
50'	50' thru 52'	383				
51'						
52'						

Note:
The maximum span lengths shown for P/S Double-Tee Girders are based on a minimum of 2-spans (continuous) being used. If one of these P/S Double-Tee Girders is used as one simple span, then the span lengths should be reduced from the maximum allowable span shown, and the girder design should be checked.

38'-10" ROADWAY - BEAM TYPE 16 (6 GIRDER)
SECTION PROPERTIES & STRAND ARRANGEMENT

Superstructure

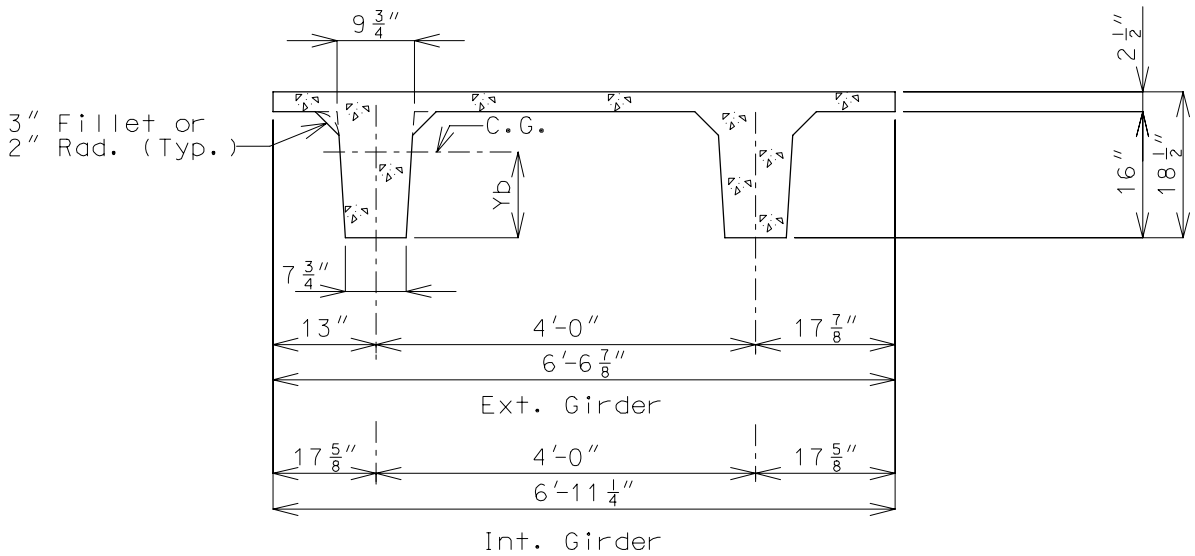

A = 477.2 sq. in.
Yb = 12.00 in.
I = 15,308 in.^{4}
EXTERIOR GIRDER

A = 488.1 sq. in.
Yb = 12.12 in.
I = 15,609 in.^{4}
INTERIOR GIRDER

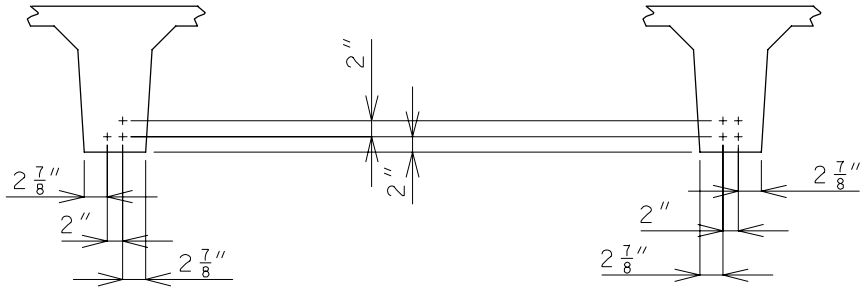

GIRDER SEQ. NO. 130
(3 STRANDS - 0 DRAPED)

GIRDER SEQ. NO. 140
(4 STRANDS - 0 DRAPED)

38'-10" ROADWAY - BEAM TYPE 16 (6 GIRDER) Superstructure
SECTION PROPERTIES & STRAND ARRANGEMENT (CONT.)

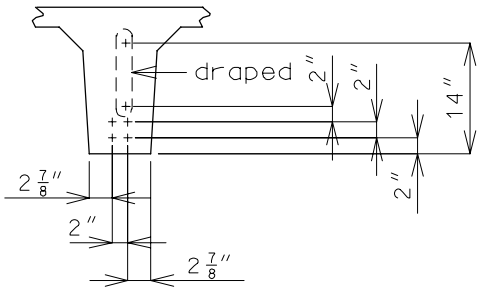

GIRDER SEQ. NO. 151
(5 STRANDS - 1 DRAPED)

Note: Location of draped strands shown in top of stem are at end of girder and draped strands in bott. of stem are at ℄.

38'-10" ROADWAY - BEAM TYPE 16 (HS20 & HS20 MILITARY) GIRDER REACTIONS

Superstructure

Span Length ℄ to ℄ Bent	Girder Seq. No.	Dead Load Reaction, kips per stem		
		Interior Girder	Exterior Girder	
			Int. Stem	Ext. Stem
20'	130	6.01	6.54	7.80
21'	130	6.33	6.89	8.21
22'	130	6.65	7.24	8.62
23'	130	6.96	7.58	9.04
24'	140	7.28	7.93	9.45
25'	140	7.60	8.27	9.86
26'	140	7.92	8.62	10.27
27'	140	8.24	8.97	10.69
28'	140	8.56	9.31	11.10
29'	151	8.87	9.66	11.51

Reactions are DL1 + DL2 from BR202 (Simple Span).

38'-10" ROADWAY - BEAM TYPE 16 (HS20 & HS20 MILITARY) GIRDER CAMBER

Superstructure

Span Length ℄ to ℄ Bent	Girder Seq. No.	Interior Girder				Exterior Girder			
		Girder Camber without Slab		Girder Camber with Slab		Girder Camber without Slab		Girder Camber with Slab	
		1/2 pt.	1/4 pt.	1/2 pt.	1/4 pt.	1/2 pt.	1/4 pt.	1/2 pt.	1/4 pt.
20'	130	1/4"	3/16"	1/4"	3/16"	1/4"	3/16"	1/4"	3/16"
21'	130	5/16"	3/16"	1/4"	3/16"	5/16"	3/16"	1/4"	3/16"
22'	130	5/16"	1/4"	5/16"	3/16"	5/16"	1/4"	5/16"	3/16"
23'	130	5/16"	1/4"	5/16"	3/16"	5/16"	1/4"	5/16"	3/16"
24'	140	1/2"	3/8"	7/16"	5/16"	1/2"	3/8"	7/16"	5/16"
25'	140	1/2"	3/8"	1/2"	5/16"	1/2"	3/8"	1/2"	5/16"
26'	140	9/16"	3/8"	1/2"	3/8"	9/16"	3/8"	1/2"	3/8"
27'	140	5/8"	7/16"	1/2"	3/8"	5/8"	7/16"	1/2"	3/8"
28'	140	5/8"	7/16"	9/16"	3/8"	5/8"	7/16"	9/16"	3/8"
29'	151	3/4"	9/16"	11/16"	1/2"	3/4"	9/16"	11/16"	1/2"

38'-10" ROADWAY - BEAM TYPE 22 (6 GIRDER) SECTION PROPERTIES & STRAND ARRANGEMENT

Superstructure

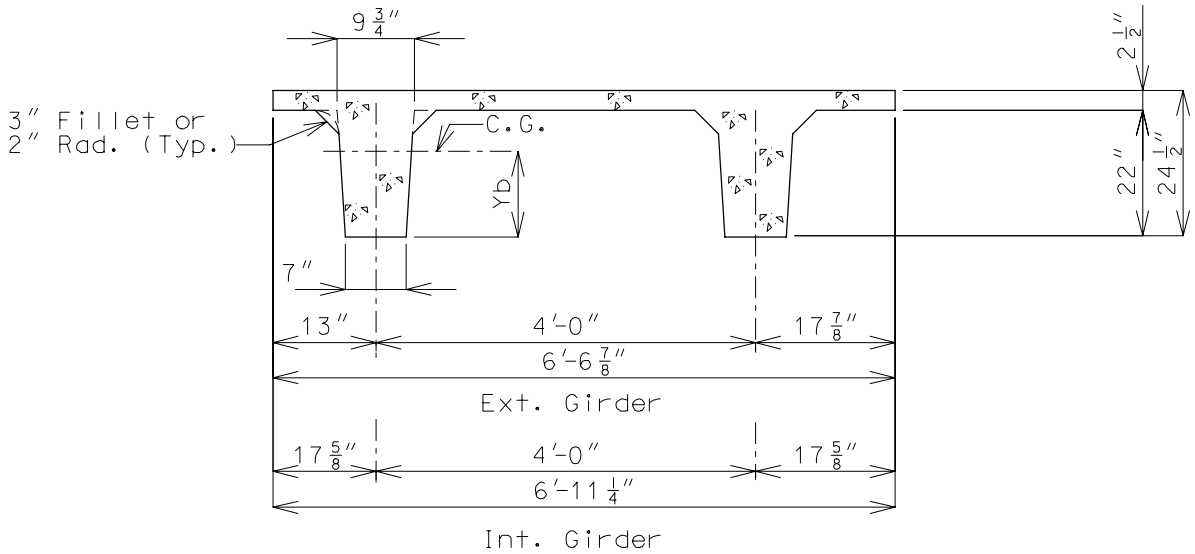

A = 565.7 sq. in.
Yb = 15.66 in.
I = 32,260 in.^{4}
EXTERIOR GIRDER

A = 576.6 sq. in.
Yb = 15.81 in.
I = 32,883 in.^{4}
INTERIOR GIRDER

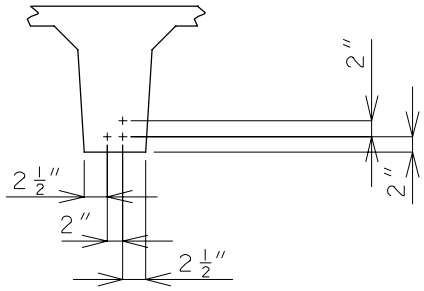

GIRDER SEQ. NO. 230
(3 STRANDS - 0 DRAPED)

38'-10" ROADWAY - BEAM TYPE 22
SECTION PROPERTIES & STRAND ARRANGEMENT (CONT.)

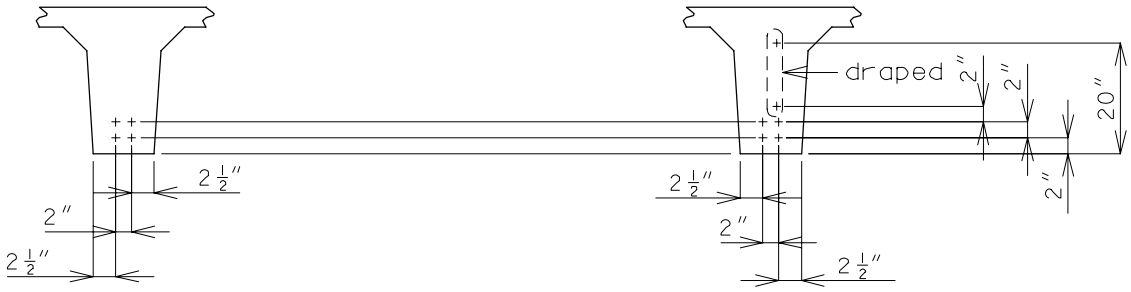

GIRDER SEQ. NO. 240
(4 STRANDS - 0 DRAPED)

GIRDER SEQ. NO. 251
(5 STRANDS - 1 DRAPED)

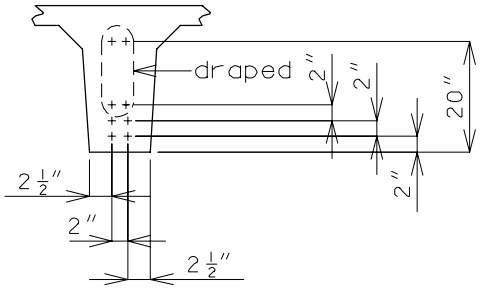

GIRDER SEQ. NO. 262
(6 STRANDS - 2 DRAPED)

Note: Location of draped strands shown in top of stem are at end of girder and draped strands in bott. of stem are at ℄.

38'-10" ROADWAY - BEAM TYPE 22 (HS20 & HS20 MILITARY) GIRDER REACTIONS

Superstructure

Span Length ℄ to ℄ Bent	Girder Seq. No.	Dead Load Reaction, kips per stem		
		Interior Girder	Exterior Girder	
			Int. Stem	Ext. Stem
20'	230	6.50	6.98	8.23
21'	230	6.85	7.35	8.67
22'	230	7.19	7.72	9.11
23'	230	7.54	8.09	9.54
24'	230	7.88	8.46	9.98
25'	230	8.23	8.83	10.41
26'	230	8.57	9.19	10.85
27'	230	8.92	9.57	11.28
28'	230	9.26	9.93	11.72
29'	230	9.61	10.30	12.16
30'	240	9.95	10.67	12.59
31'	240	10.30	11.04	13.03
32'	240	10.64	11.41	13.46
33'	240	10.99	11.78	13.90
34'	240	11.33	12.15	14.33
35'	251	11.68	12.52	14.77
36'	251	12.02	12.88	15.21
37'	251	12.36	13.25	15.63
38'	262	12.69	13.62	16.06
39'	262	13.05	13.99	16.49

Reactions are DL1 + DL2 from BR202 (Simple Span).

38'-10" ROADWAY - BEAM TYPE 22 (HS20 & HS20 MILITARY) GIRDER CAMBER

Superstructure

Span Length ℄ to ℄ Bent	Girder Seq. No.	Interior Girder				Exterior Girder			
		Girder Camber without Slab		Girder Camber with Slab		Girder Camber without Slab		Girder Camber with Slab	
		1/2 pt.	1/4 pt.	1/2 pt.	1/4 pt.	1/2 pt.	1/4 pt.	1/2 pt.	1/4 pt.
20'	230	3/16"	1/8"	3/16"	1/8"	3/16"	1/8"	3/16"	1/8"
21'	230	3/16"	1/8"	3/16"	1/8"	3/16"	1/8"	3/16"	1/8"
22'	230	3/16"	1/8"	3/16"	1/8"	3/16"	1/8"	3/16"	1/8"
23'	230	1/4"	3/16"	3/16"	1/8"	1/4"	3/16"	3/16"	1/8"
24'	230	1/4"	3/16"	1/4"	3/16"	1/4"	3/16"	1/4"	3/16"
25'	230	1/4"	3/16"	1/4"	3/16"	1/4"	3/16"	1/4"	3/16"
26'	230	1/4"	3/16"	1/4"	3/16"	1/4"	3/16"	1/4"	3/16"
27'	230	5/16"	3/16"	1/4"	3/16"	5/16"	3/16"	1/4"	3/16"
28'	230	5/16"	1/4"	1/4"	3/16"	5/16"	1/4"	1/4"	3/16"
29'	230	5/16"	1/4"	5/16"	3/16"	5/16"	1/4"	5/16"	3/16"
30'	240	7/16"	5/16"	7/16"	5/16"	7/16"	5/16"	7/16"	5/16"
31'	240	1/2"	3/8"	7/16"	5/16"	1/2"	3/8"	7/16"	5/16"
32'	240	9/16"	3/8"	7/16"	5/16"	9/16"	3/8"	7/16"	5/16"
33'	240	9/16"	3/8"	1/2"	3/8"	9/16"	3/8"	1/2"	3/8"
34'	240	9/16"	7/16"	1/2"	3/8"	9/16"	7/16"	1/2"	3/8"
35'	251	3/4"	1/2"	5/8"	7/16"	3/4"	1/2"	5/8"	7/16"
36'	251	3/4"	9/16"	5/8"	7/16"	3/4"	9/16"	5/8"	7/16"
37'	251	3/4"	9/16"	5/8"	7/16"	3/4"	9/16"	5/8"	7/16"
38'	262	15/16"	11/16"	13/16"	9/16"	15/16"	11/16"	13/16"	9/16"
39'	262	1"	11/16"	13/16"	9/16"	1"	11/16"	13/16"	9/16"

38'-10" ROADWAY - BEAM TYPE 30 (6 GIRDER) SECTION PROPERTIES & STRAND ARRANGEMENT

Superstructure

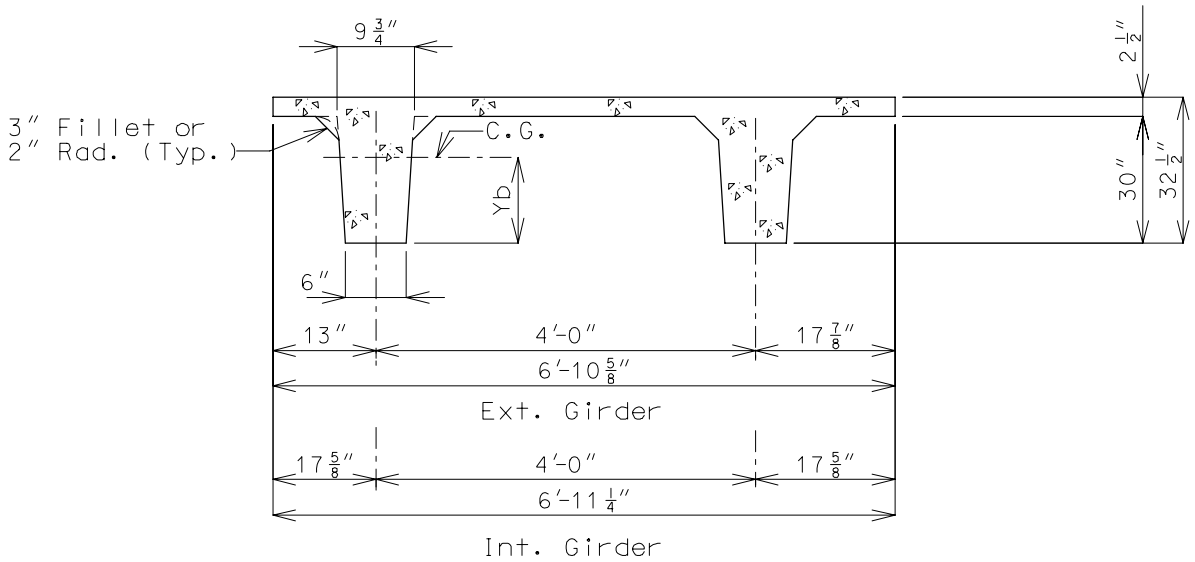

A = 669.7 sq. in.
Yb = 20.62 in.
I = 66,423 in.^{4}
EXTERIOR GIRDER

A = 680.6 sq. in.
Yb = 20.80 in.
I = 67,644in.^{4}
INTERIOR GIRDER

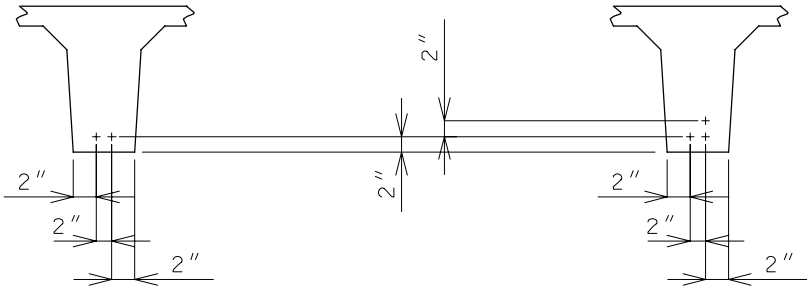

GIRDER SEQ. NO. 320
(2 STRANDS - 0 DRAPED)

GIRDER SEQ. NO. 330
(3 STRANDS - 0 DRAPED)

38'-10" ROADWAY - BEAM TYPE 30
SECTION PROPERTIES & STRAND ARRANGEMENT (CONT.)

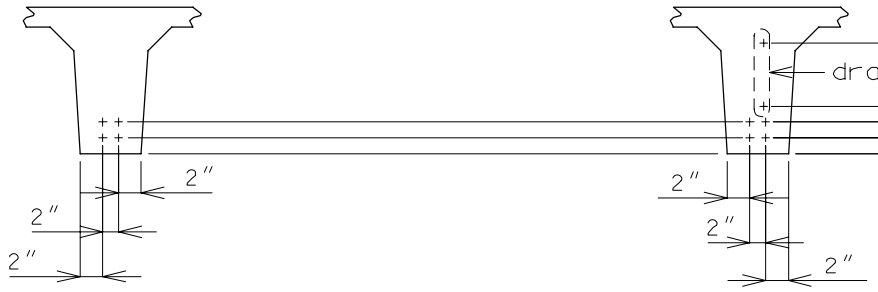

GIRDER SEQ. NO. 340
(4 STRANDS - 0 DRAPED)

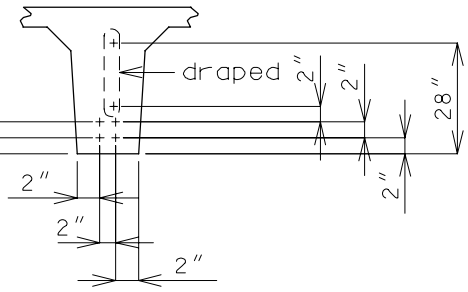

GIRDER SEQ. NO. 351
(5 STRANDS - 1 DRAPED)

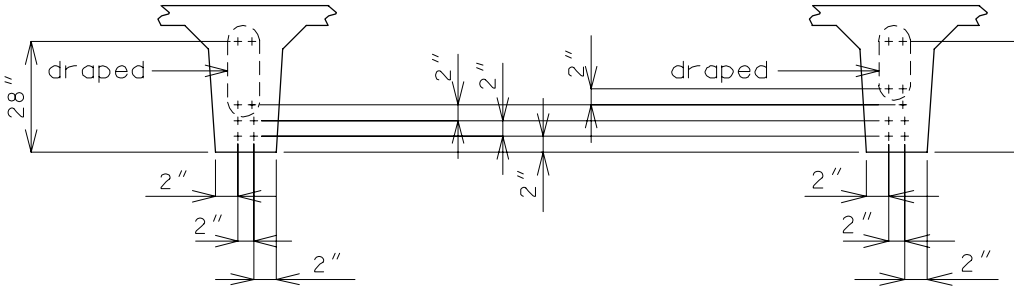

GIRDER SEQ. NO. 362
(6 STRANDS - 2 DRAPED)

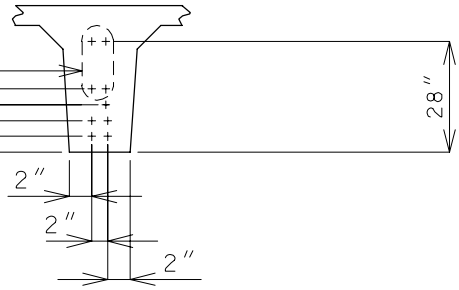

GIRDER SEQ. NO. 372
(7 STRANDS - 2 DRAPED)

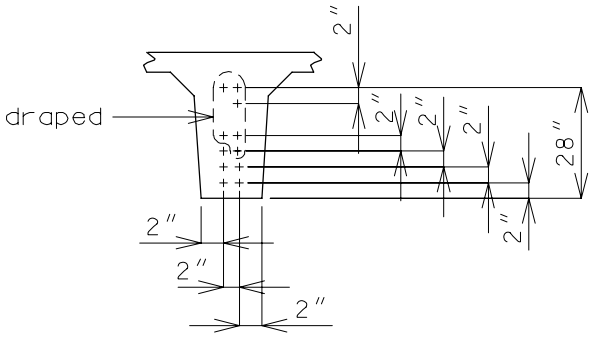

GIRDER SEQ. NO. 383
(8 STRANDS - 3 DRAPED)

Note: Location of draped strands shown in top of stem are at end of girder and draped strands in bott. of stem are at ℄.

38'-10" ROADWAY - BEAM TYPE 30 (HS20 & HS20 MILITARY) GIRDER REACTIONS

Superstructure

Span Length ℄ to ℄ Bent	Girder Seq. No.	Dead Load Reaction, kips per stem		
		Interior Girder	Exterior Girder	
			Int. Stem	Ext. Stem
20'	320	6.89	7.35	8.58
21'	320	7.26	7.74	9.04
22'	320	7.63	8.14	9.50
23'	320	8.01	8.54	9.97
24'	320	8.37	8.93	10.43
25'	320	8.75	9.33	10.89
26'	320	9.12	9.73	11.36
27'	320	9.49	10.12	11.82
28'	320	9.86	10.52	12.28
29'	330	10.24	10.92	12.74
30'	330	10.60	11.31	13.21
31'	330	10.98	11.71	13.67
32'	330	11.35	12.11	14.13
33'	330	11.73	12.50	14.59
34'	330	12.09	12.90	15.06
35'	340	12.47	13.29	15.52
36'	340	12.84	13.69	15.98
37'	340	13.20	14.09	16.45
38'	340	13.58	14.48	16.91
39'	340	13.95	14.88	17.37
40'	340	14.32	15.28	17.83
41'	351	14.69	15.67	18.30
42'	351	15.06	16.07	18.76
43'	351	15.43	16.47	19.22
44'	351	15.81	16.86	19.68
45'	362	16.18	17.26	20.15
46'	362	16.56	17.65	20.61
47'	372	16.92	18.05	21.07
48'	372	17.29	18.44	21.52
49'	372	17.66	18.83	21.98
50'	383	18.03	19.23	22.44
51'	383	18.40	19.62	22.90
52'	383	18.77	20.01	23.35

Reactions are DL1 + DL2 from BR202 (Simple Span).

38'-10" ROADWAY - BEAM TYPE 30 (HS20 & HS20 MILITARY) GIRDER CAMBER

Superstructure

Span Length ℄ to ℄ Bent	Girder Seq. No.	Interior Girder				Exterior Girder			
		Girder Camber without Slab		Girder Camber with Slab		Girder Camber without Slab		Girder Camber with Slab	
		1/2 pt.	1/4 pt.	1/2 pt.	1/4 pt.	1/2 pt.	1/4 pt.	1/2 pt.	1/4 pt.
20'	320	1/16"	1/16"	1/16"	1/16"	1/16"	1/16"	1/16"	1/16"
21'	320	1/16"	1/16"	1/16"	1/16"	1/16"	1/16"	1/16"	1/16"
22'	320	1/8"	1/16"	1/16"	1/16"	1/8"	1/16"	1/16"	1/16"
23'	320	1/8"	1/16"	1/16"	1/16"	1/8"	1/16"	1/16"	1/16"
24'	320	1/8"	1/16"	1/8"	1/16"	1/8"	1/16"	1/8"	1/16"
25'	320	1/8"	1/16"	1/8"	1/16"	1/8"	1/16"	1/8"	1/16"
26'	320	1/8"	1/16"	1/8"	1/16"	1/8"	1/16"	1/8"	1/16"
27'	320	1/8"	1/16"	1/8"	1/16"	1/8"	1/16"	1/8"	1/16"
28'	320	1/8"	1/8"	1/8"	1/16"	1/8"	1/8"	1/8"	1/16"
29'	330	1/4"	3/16"	3/16"	1/8"	1/4"	3/16"	3/16"	1/8"
30'	330	1/4"	3/16"	3/16"	1/8"	1/4"	3/16"	3/16"	1/8"
31'	330	1/4"	3/16"	1/4"	3/16"	1/4"	3/16"	1/4"	3/16"
32'	330	1/4"	3/16"	1/4"	3/16"	1/4"	3/16"	1/4"	3/16"
33'	330	1/4"	3/16"	1/4"	3/16"	1/4"	3/16"	1/4"	3/16"
34'	330	5/16"	3/16"	1/4"	3/16"	5/16"	3/16"	1/4"	3/16"
35'	340	7/16"	5/16"	3/8"	1/4"	7/16"	5/16"	3/8"	1/4"
36'	340	7/16"	5/16"	3/8"	1/4"	7/16"	5/16"	3/8"	1/4"
37'	340	1/2"	5/16"	3/8"	5/16"	1/2"	5/16"	3/8"	5/16"
38'	340	1/2"	3/8"	7/16"	5/16"	1/2"	3/8"	7/16"	5/16"
39'	340	1/2"	3/8"	7/16"	5/16"	1/2"	3/8"	7/16"	5/16"
40'	340	1/2"	3/8"	7/16"	5/16"	1/2"	3/8"	7/16"	5/16"
41'	351	5/8"	7/16"	9/16"	3/8"	5/8"	7/16"	9/16"	3/8"
42'	351	11/16"	1/2"	9/16"	3/8"	11/16"	1/2"	9/16"	3/8"
43'	351	11/16"	1/2"	9/16"	3/8"	11/16"	1/2"	9/16"	3/8"
44'	351	11/16"	1/2"	9/16"	3/8"	11/16"	1/2"	9/16"	3/8"
45'	362	7/8"	5/8"	11/16"	1/2"	7/8"	5/8"	11/16"	1/2"
46'	362	7/8"	5/8"	11/16"	1/2"	7/8"	5/8"	11/16"	1/2"
47'	372	1"	11/16"	13/16"	9/16"	1"	11/16"	13/16"	9/16"
48'	372	1"	3/4"	13/16"	5/8"	1"	3/4"	13/16"	5/8"
49'	372	1-1/16"	3/4"	13/16"	5/8"	1-1/16"	3/4"	13/16"	5/8"
50'	383	1-1/4"	7/8"	1"	3/4"	1-1/4"	7/8"	1"	3/4"
51'	383	1-1/4"	7/8"	1"	3/4"	1-1/4"	7/8"	1"	3/4"
52'	383	1-5/16"	15/16"	1"	3/4"	1-5/16"	15/16"	1"	3/4"

42'-10" ROADWAY
GIRDER SPAN LENGTH (HS20 & HS20 MILITARY LOADING)

Superstructure

Span Length ℄ to ℄ Bent	Allowable Span Length For P/S Concrete Double-Tee Girder Spans					
	Type 30		Type 22		Type 16	
	Span Length	Girder Seq. No.	Span Length	Girder Seq. No.	Span Length	Girder Seq. No.
20'	20' thru 22'	320	20' thru 24'	230	20' thru 24'	140
21'						
22'						
23'	23' thru 28'	330				
24'						
25'			25' thru 29'	240	25' thru 27'	151
26'						
27'						
28'					28'	162
29'	29' thru 34'	340				
30'			30' thru 33'	251		
31'						
32'						
33'						
34'			34' thru 36'	262		
35'	35' thru 39'	351				
36'						
37'						
38'						
39'						
40'	40' thru 42'	362				
41'						
42'						
43'	43' thru 47'	383				
44'						
45'						
46'						
47'						

Note:
The maximum span lengths shown for P/S Double-Tee Girders are based on a minimum of 2-spans (continuous) being used. If one of these P/S Double-Tee Girders is used as one simple span, then the span lengths should be reduced from the maximum allowable span shown, and the girder design should be checked.

42'-10" ROADWAY - BEAM TYPE 16 (6 GIRDER) SECTION PROPERTIES & STRAND ARRANGEMENT

Superstructure

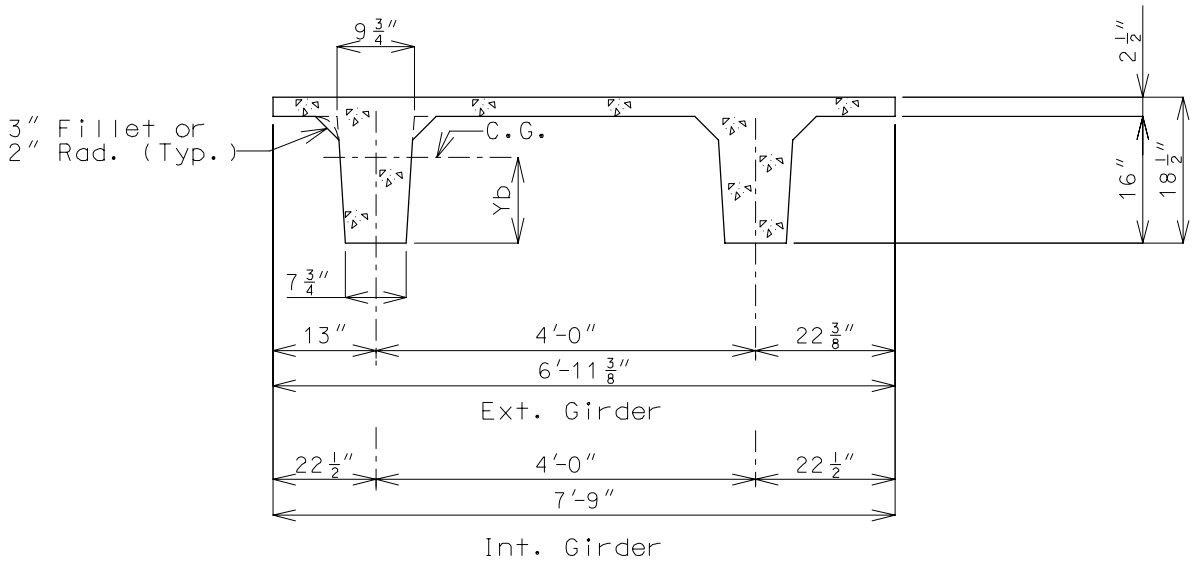

A = 488.4 sq. in.
Yb = 12.12 in.
I = 15,617 in.^{4}
EXTERIOR GIRDER

A = 512.5 sq. in.
Yb = 12.36 in.
I = 16,233 in.^{4}
INTERIOR GIRDER

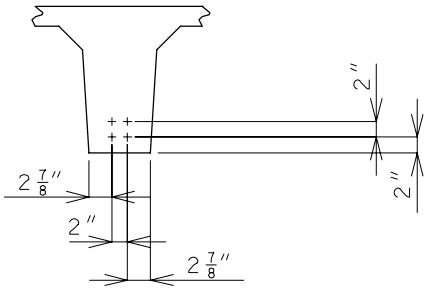

GIRDER SEQ. NO. 140
(4 STRANDS - 0 DRAPED)

42'-10" ROADWAY - BEAM TYPE 16 (6 GIRDER)
SECTION PROPERTIES & STRAND ARRANGEMENT (CONT.)

Superstructure

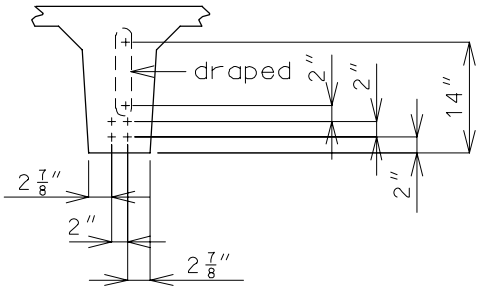

GIRDER SEQ. NO. 151
(5 STRANDS - 1 DRAPED)

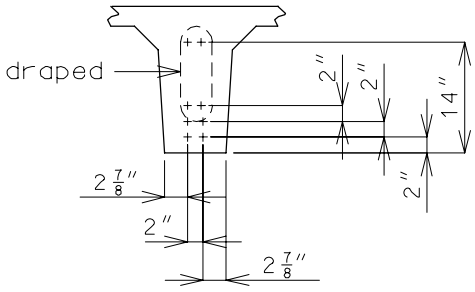

GIRDER SEQ. NO. 162
(6 STRANDS - 2 DRAPED)

Note: Location of draped strands shown in top of stem are at end of girder and draped strands in bott. of stem are at ℄.

42'-10" ROADWAY - BEAM TYPE 16 (HS20 & HS20 MILITARY) GIRDER REACTIONS

Superstructure

Span Length ℄ to ℄ Bent	Girder Seq. No.	Dead Load Reaction, kips per stem		
		Interior Girder	Exterior Girder	
			Int. Stem	Ext. Stem
20'	140	6.49	6.93	7.77
21'	140	6.82	7.30	8.18
22'	140	7.18	7.67	8.60
23'	140	7.53	8.04	9.01
24'	140	7.87	8.41	9.43
25'	151	8.21	8.78	9.84
26'	151	8.55	9.13	10.24
27'	151	8.88	9.49	10.64
28'	162	9.22	9.85	11.04

Reactions are DL1 + DL2 from BR202 (Simple Span).

42'-10" ROADWAY - BEAM TYPE 16 (HS20 & HS20 MILITARY) GIRDER CAMBER

Superstructure

Span Length ℄ to ℄ Bent	Girder Seq. No.	Interior Girder				Exterior Girder			
		Girder Camber without Slab		Girder Camber with Slab		Girder Camber without Slab		Girder Camber with Slab	
		1/2 pt.	1/4 pt.	1/2 pt.	1/4 pt.	1/2 pt.	1/4 pt.	1/2 pt.	1/4 pt.
20'	140	3/8"	1/4"	5/16"	1/4"	3/8"	1/4"	5/16"	1/4"
21'	140	3/8"	1/4"	3/8"	1/4"	3/8"	1/4"	3/8"	1/4"
22'	140	7/16"	5/16"	3/8"	1/4"	7/16"	5/16"	3/8"	1/4"
23'	140	7/16"	5/16"	3/8"	5/16"	7/16"	5/16"	3/8"	5/16"
24'	140	1/2"	5/16"	7/16"	5/16"	1/2"	5/16"	7/16"	5/16"
25'	151	9/16"	7/16"	9/16"	3/8"	9/16"	7/16"	9/16"	3/8"
26'	151	5/8"	7/16"	9/16"	3/8"	5/8"	7/16"	9/16"	3/8"
27'	151	11/16"	1/2"	5/8"	7/16"	11/16"	1/2"	5/8"	7/16"
28'	162	13/16"	9/16"	3/4"	1/2"	13/16"	9/16"	3/4"	1/2"

42'-10" ROADWAY - BEAM TYPE 22 (6 GIRDER) SECTION PROPERTIES & STRAND ARRANGEMENT

Superstructure

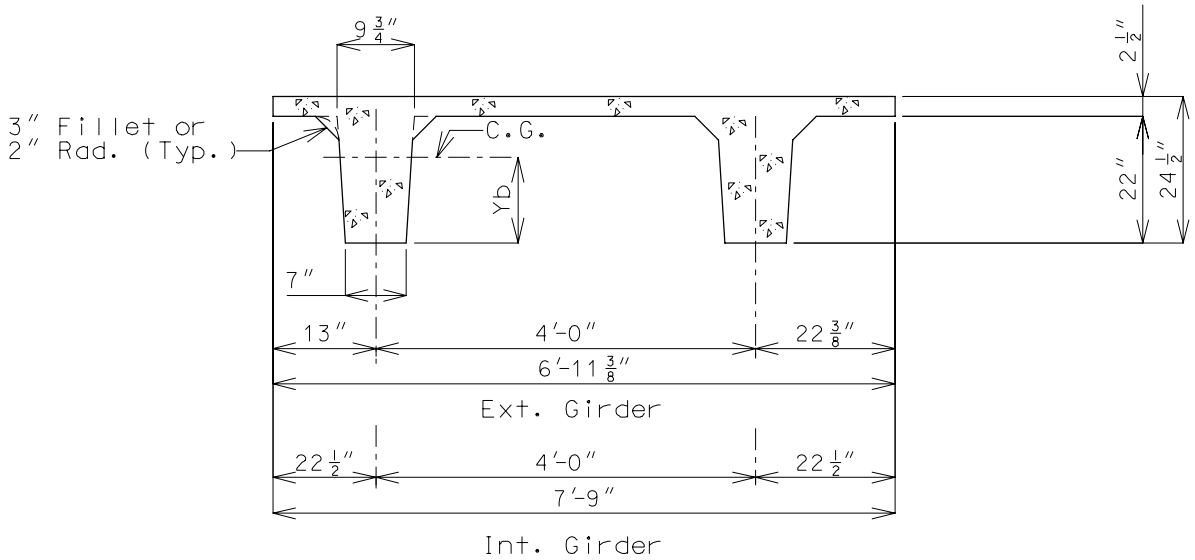

A = 576.9 sq. in.
Yb = 15.8 in.
I = 32,900 in.^{4}
EXTERIOR GIRDER

A = 610.0 sq. in.
Yb = 16.1 in.
I = 34,192 in.^{4}
INTERIOR GIRDER

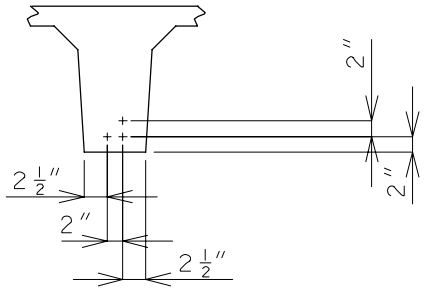

GIRDER SEQ. NO. 230
(3 STRANDS - 0 DRAPED)

42'-10" ROADWAY - BEAM TYPE 22
SECTION PROPERTIES & STRAND ARRANGEMENT (CONT.)

Superstructure

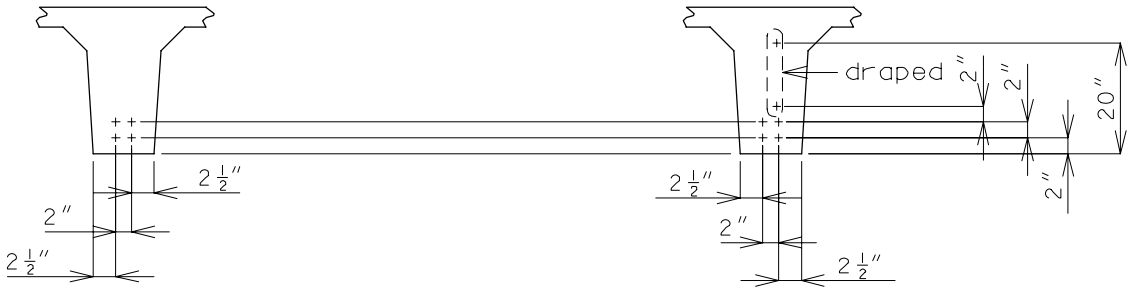

GIRDER SEQ. NO. 240
(4 STRANDS - 0 DRAPED)

GIRDER SEQ. NO. 251
(5 STRANDS - 1 DRAPED)

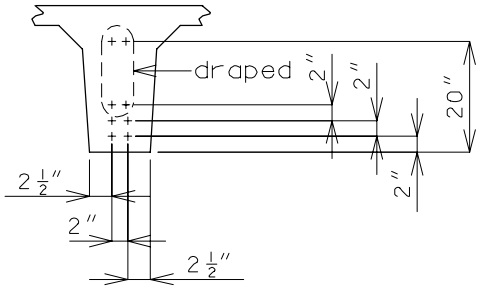

GIRDER SEQ. NO. 262
(6 STRANDS - 2 DRAPED)

Note: Location of draped strands shown in top of stem are at end of girder and draped strands in bott. of stem are at ℄.

42'-10" ROADWAY - BEAM TYPE 22 (HS20 & HS20 MILITARY) GIRDER REACTIONS

Superstructure

Span Length ℄ to ℄ Bent	Girder Seq. No.	Dead Load Reaction, kips per stem		
		Interior Girder	Exterior Girder	
			Int. Stem	Ext. Stem
20'	230	6.92	7.36	8.20
21'	230	7.29	7.76	8.64
22'	230	7.66	8.15	9.08
23'	230	8.03	8.54	9.51
24'	230	8.40	8.94	9.95
25'	240	8.76	9.33	10.39
26'	240	9.13	9.72	10.83
27'	240	9.50	10.12	11.26
28'	240	9.87	10.51	11.70
29'	240	10.29	10.90	12.14
30'	251	10.61	11.29	12.58
31'	251	10.98	11.69	13.02
32'	251	11.34	12.08	13.45
33'	251	11.71	12.47	13.89
34'	262	12.08	12.87	14.33
35'	262	12.44	13.25	14.75
36'	262	12.80	13.63	15.18

Reactions are DL1 + DL2 from BR202 (Simple Span).

42'-10" ROADWAY - BEAM TYPE 22 (HS20 & HS20 MILITARY) GIRDER CAMBER

Superstructure

Span Length ℄ to ℄ Bent	Girder Seq. No.	Interior Girder				Exterior Girder			
		Girder Camber without Slab		Girder Camber with Slab		Girder Camber without Slab		Girder Camber with Slab	
		1/2 pt.	1/4 pt.	1/2 pt.	1/4 pt.	1/2 pt.	1/4 pt.	1/2 pt.	1/4 pt.
20'	230	3/16"	1/8"	3/16"	1/8"	3/16"	1/8"	3/16"	1/8"
21'	230	3/16"	1/8"	3/16"	1/8"	3/16"	1/8"	3/16"	1/8"
22'	230	3/16"	1/8"	3/16"	1/8"	3/16"	1/8"	3/16"	1/8"
23'	230	1/4"	3/16"	3/16"	1/8"	1/4"	3/16"	3/16"	1/8"
24'	240	1/4"	3/16"	3/16"	1/8"	1/4"	3/16"	3/16"	1/8"
25'	240	3/8"	1/4"	5/16"	1/4"	3/8"	1/4"	5/16"	1/4"
26'	240	3/8"	1/4"	5/16"	1/4"	3/8"	1/4"	5/16"	1/4"
27'	240	3/8"	5/16"	3/8"	1/4"	3/8"	5/16"	3/8"	1/4"
28'	240	7/16"	5/16"	3/8"	1/4"	7/16"	5/16"	3/8"	1/4"
29'	240	7/16"	5/16"	3/8"	1/4"	7/16"	5/16"	3/8"	1/4"
30'	251	9/16"	3/8"	1/2"	3/8"	9/16"	3/8"	1/2"	3/8"
31'	251	9/16"	7/16"	1/2"	3/8"	9/16"	7/16"	1/2"	3/8"
32'	251	5/8"	7/16"	9/16"	3/8"	5/8"	7/16"	9/16"	3/8"
33'	251	5/8"	7/16"	9/16"	3/8"	5/8"	7/16"	9/16"	3/8"
34'	262	13/16"	9/16"	11/16"	1/2"	13/16"	9/16"	11/16"	1/2"
35'	262	13/16"	9/16"	11/16"	1/2"	13/16"	9/16"	11/16"	1/2"
36'	262	7/8"	5/8"	3/4"	1/2"	7/8"	5/8"	3/4"	1/2"

42'-10" ROADWAY - BEAM TYPE 30 (6 GIRDER) SECTION PROPERTIES & STRAND ARRANGEMENT

Superstructure

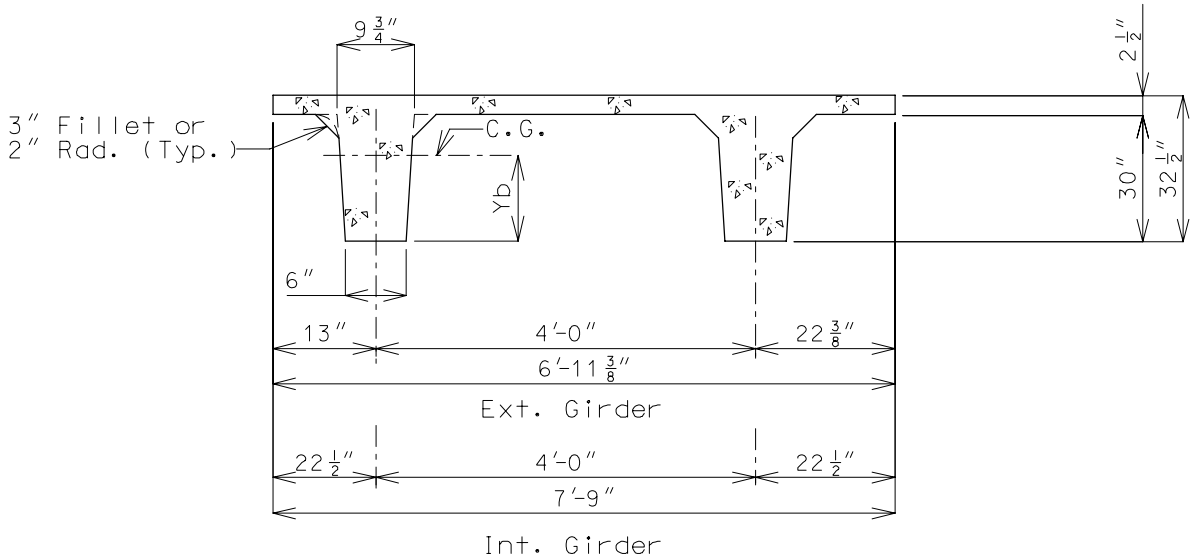

A = 680.9 sq. in.
Yb = 20.80 in.
I = 67,678 in.^{4}
EXTERIOR GIRDER

A = 705.0 sq. in.
Yb = 21.16 in.
I = 70,228 in.^{4}
INTERIOR GIRDER

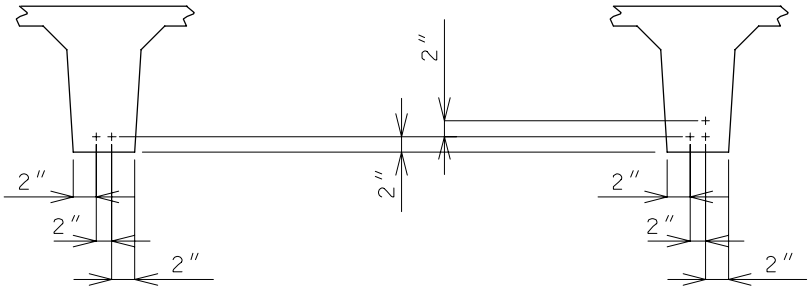

GIRDER SEQ. NO. 320
(2 STRANDS - 0 DRAPED)

GIRDER SEQ. NO. 330
(3 STRANDS - 0 DRAPED)

42'-10" ROADWAY - BEAM TYPE 30
SECTION PROPERTIES & STRAND ARRANGEMENT (CONT.)

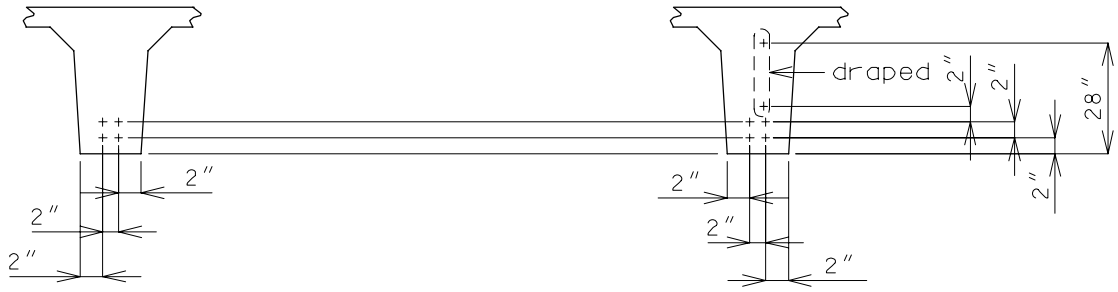

GIRDER SEQ. NO. 340
(4 STRANDS - 0 DRAPED)

GIRDER SEQ. NO. 351
(5 STRANDS - 1 DRAPED)

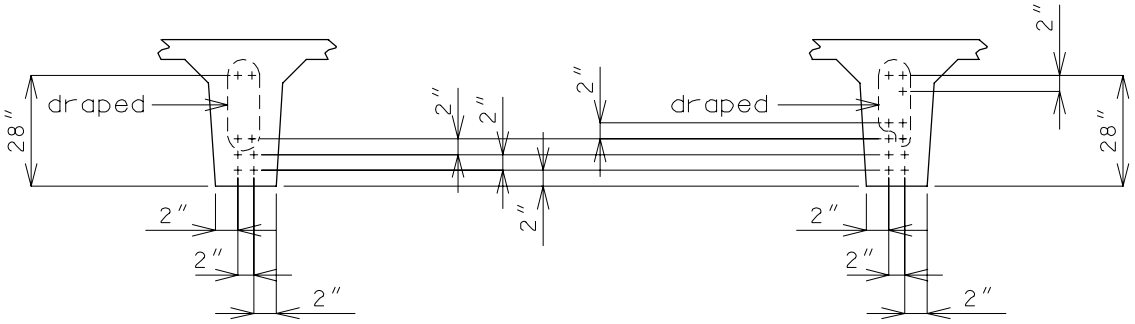

GIRDER SEQ. NO. 362
(6 STRANDS - 2 DRAPED)

GIRDER SEQ. NO. 383
(8 STRANDS - 3 DRAPED)

Note: Location of draped strands shown in top of stem are at end of girder and draped strands in bott. of stem are at ℄.

42'-10" ROADWAY - BEAM TYPE 30 (HS20 & HS20 MILITARY) GIRDER REACTIONS

Superstructure

Span Length ℄ to ℄ Bent	Girder Seq. No.	Dead Load Reaction, kips per stem		
		Interior Girder	Exterior Girder	
			Int. Stem	Ext. Stem
20'	330	7.42	7.87	8.71
21'	320	7.82	8.29	9.17
22'	320	8.22	8.71	9.64
23'	330	8.61	9.13	10.10
24'	330	9.02	9.55	10.57
25'	330	9.40	9.97	11.03
26'	330	9.80	10.39	11.50
27'	330	10.20	10.81	11.96
28'	330	10.60	11.23	12.43
29'	340	10.99	11.65	12.89
30'	340	11.39	12.07	13.36
31'	340	11.79	12.49	13.82
32'	340	12.19	12.91	14.29
33'	340	12.57	13.33	14.75
34'	340	12.97	13.75	15.22
35'	351	13.37	14.17	15.68
36'	351	13.77	14.59	16.15
37'	351	14.16	15.00	16.61
38'	351	14.57	15.43	17.07
39'	351	14.96	15.85	17.54
40'	362	15.36	16.27	18.00
41'	362	15.74	16.69	18.47
42'	362	16.14	17.11	18.93
43'	383	16.54	17.53	19.40
44'	383	16.94	17.95	19.86
45'	383	17.32	18.37	20.33
46'	383	17.72	18.78	20.78
47'	383	18.12	19.20	21.24

Reactions are DL1 + DL2 from BR202 (Simple Span).

42'-10" ROADWAY - BEAM TYPE 30 (HS20 & HS20 MILITARY) GIRDER CAMBER

Superstructure

Span Length ℄ to ℄ Bent	Girder Seq. No.	Interior Girder				Exterior Girder			
		Girder Camber without Slab		Girder Camber with Slab		Girder Camber without Slab		Girder Camber with Slab	
		1/2 pt.	1/4 pt.	1/2 pt.	1/4 pt.	1/2 pt.	1/4 pt.	1/2 pt.	1/4 pt.
20'	320	1/16"	1/16"	1/16"	1/16"	1/16"	1/16"	1/16"	1/16"
21'	320	1/16"	1/16"	1/16"	1/16"	1/16"	1/16"	1/16"	1/16"
22'	320	1/16"	1/16"	1/16"	1/16"	1/16"	1/16"	1/16"	1/16"
23'	330	1/8"	1/8"	1/8"	1/8"	3/16"	1/8"	1/8"	1/8"
24'	330	3/16"	1/8"	1/8"	1/8"	3/16"	1/8"	1/8"	1/8"
25'	330	3/16"	1/8"	3/16"	1/8"	3/16"	1/8"	3/16"	1/8"
26'	330	3/16"	1/8"	3/16"	1/8"	3/16"	1/8"	3/16"	1/8"
27'	330	3/16"	1/8"	3/16"	1/8"	3/16"	1/8"	3/16"	1/8"
28'	330	3/16"	1/8"	3/16"	1/8"	3/16"	1/8"	3/16"	1/8"
29'	340	5/16"	1/4"	5/16"	3/16"	5/16"	1/4"	5/16"	3/16"
30'	340	5/16"	1/4"	5/16"	3/16"	5/16"	1/4"	5/16"	3/16"
31'	340	3/8"	1/4"	5/16"	1/4"	3/8"	1/4"	5/16"	1/4"
32'	340	3/8"	1/4"	5/16"	1/4"	3/8"	1/4"	5/16"	1/4"
33'	340	3/8"	1/4"	5/16"	1/4"	3/8"	1/4"	5/16"	1/4"
34'	340	3/8"	1/4"	5/16"	1/4"	3/8"	1/4"	5/16"	1/4"
35'	351	1/2"	3/8"	7/16"	5/16"	1/2"	3/8"	7/16"	5/16"
36'	351	1/2"	3/8"	1/2"	5/16"	1/2"	3/8"	1/2"	5/16"
37'	351	9/16"	3/8"	1/2"	3/8"	9/16"	3/8"	1/2"	3/8"
38'	351	9/16"	7/16"	1/2"	3/8"	9/16"	7/16"	1/2"	3/8"
39'	351	9/16"	7/16"	1/2"	3/8"	9/16"	7/16"	1/2"	3/8"
40'	362	3/4"	1/2"	5/8"	7/16"	3/4"	1/2"	5/8"	7/16"
41'	362	3/4"	1/2"	5/8"	7/16"	3/4"	1/2"	5/8"	7/16"
42'	362	3/4"	9/16"	5/8"	7/16"	3/4"	9/16"	5/8"	7/16"
43'	383	1"	3/4"	7/8"	5/8"	1"	3/4"	7/8"	5/8"
44'	383	1-1/16"	3/4"	15/16"	11/16"	1-1/16"	3/4"	15/16"	11/16"
45'	383	1-1/16"	3/4"	15/16"	11/16"	1-1/16"	3/4"	15/16"	11/16"
46'	383	1-1/8"	13/16"	15/16"	11/16"	1-1/8"	13/16"	15/16"	11/16"
47'	383	1-1/8"	13/16"	15/16"	11/16"	1-1/8"	13/16"	15/16"	11/16"

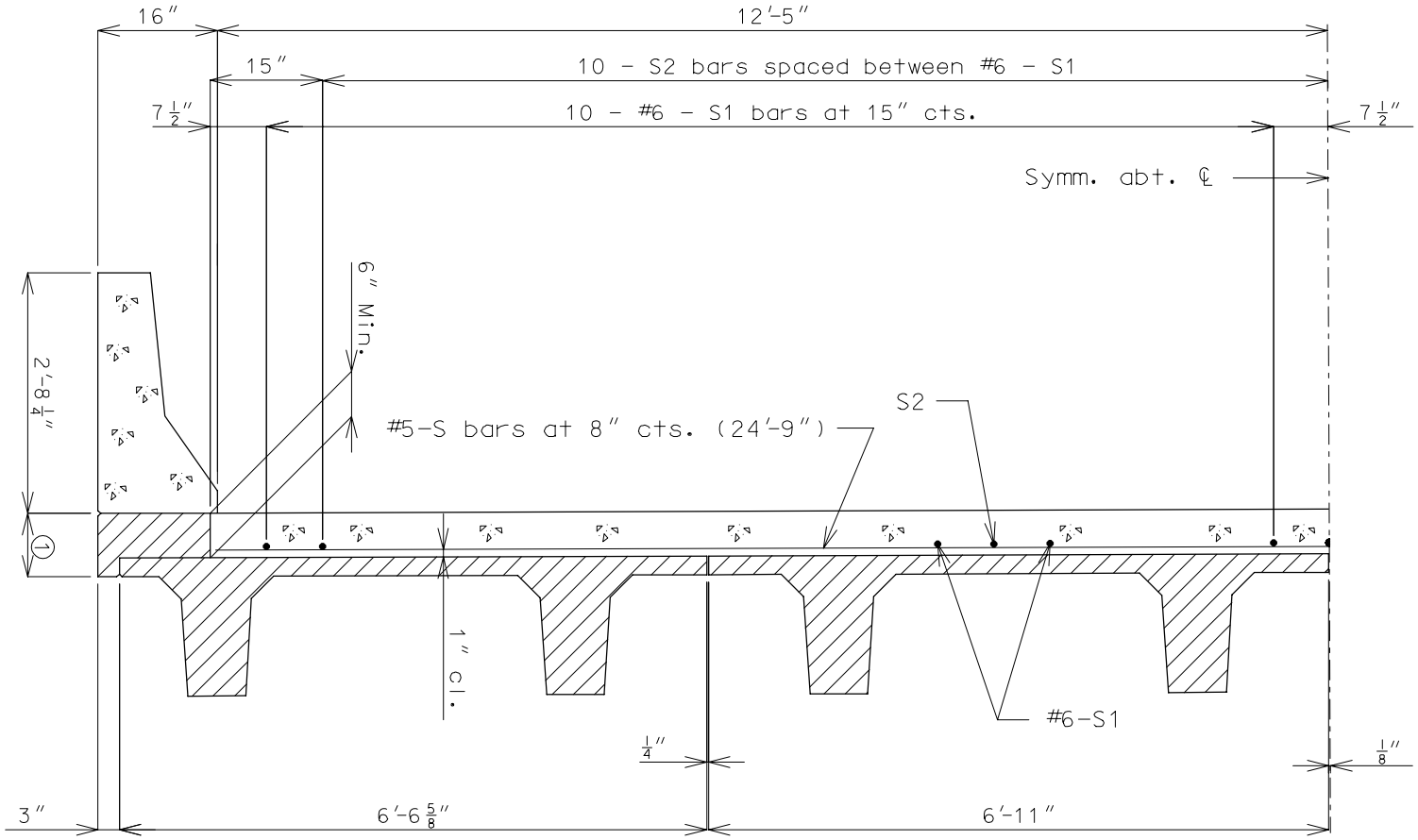

HALF SECTION NEAR INT. BENT

① 2-1/2" + Theoretical slab thickness.

Note: S2 bars at Int. Bents for negative moment reinforcement.

24'-10" ROADWAY (HS20 & HS20 MILITARY)
SLAB REINFORCEMENT (CONT.)

Reinforcement

NEGATIVE MOMENT REINFORCEMENT

ADDITIONAL BARS (S2) OVER INT. BENTS			
Girder Seq. No.	No. of add bars	Size of Neg. Mom. Reinf.	Length (✳)
130	19	#5	8'-0"
140	19	#5	8'-0"
151	19	#7	8'-0"
230	19	#5	8'-0"
240	19	#5	8'-0"
251	19	#5	8'-0"
262	19	#5	8'-0"
320	19	#5	8'-0"
330	19	#5	8'-0"
340	19	#5	8'-0"
351	19	#5	8'-0"
362	19	#7	8'-0"
372	19	#7	10'-0"
383	19	#7	15'-0"

✳ Length each side from ℄ Int. Bent. For unequal spans use greater length on both sides of Int. Bent.

24'-10" ROADWAY (HS20 & HS20 MILITARY) SLAB REINFORCEMENT (CONT.)

Reinforcement

✳ Skewed Girders

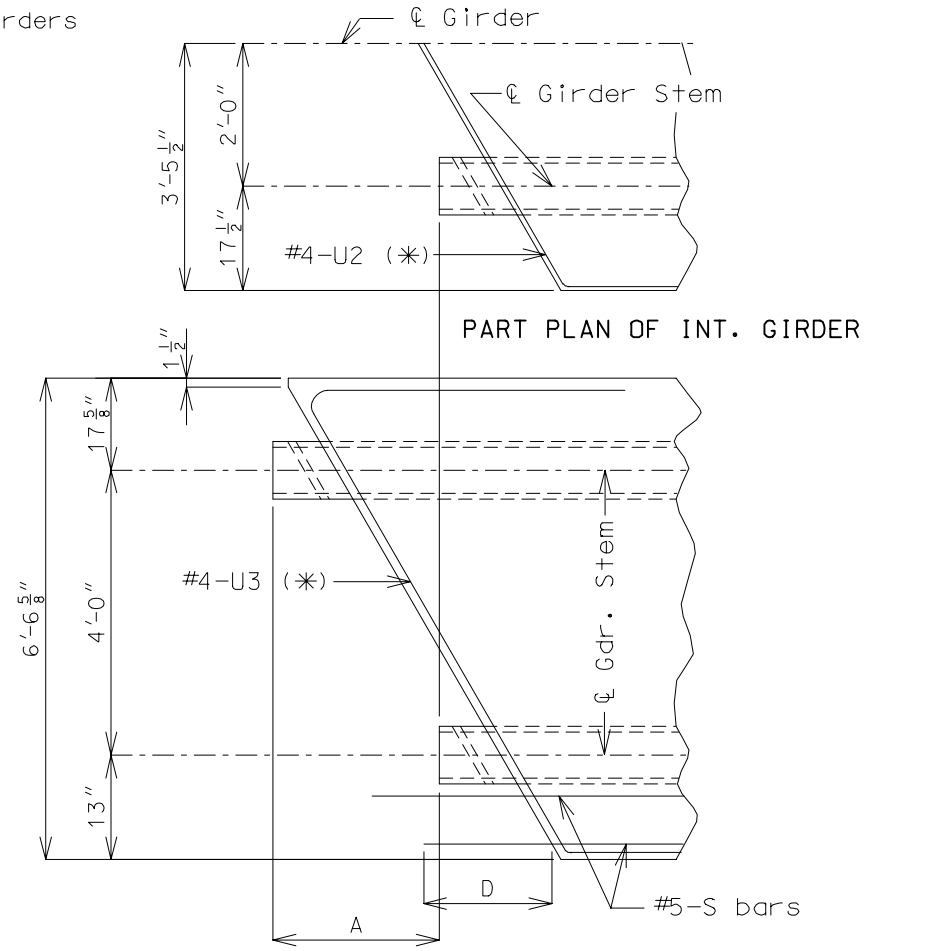

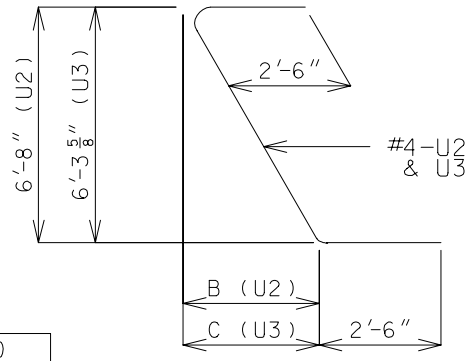

SHAPE 21 (✳)

Skew Angle	A	B	C	D
0°	–	–	–	20"
10°	8 1/2"	14 1/8"	13 3/8"	21"
20°	17 1/2"	2'-5 1/8"	2'-3 1/2"	22"
30°	2'-3 3/4"	3'-10 1/4"	3'-7 5/8"	2'-0"
40°	3'-4 1/4"	5'-7 1/8"	5'-3 1/2"	2'-3"

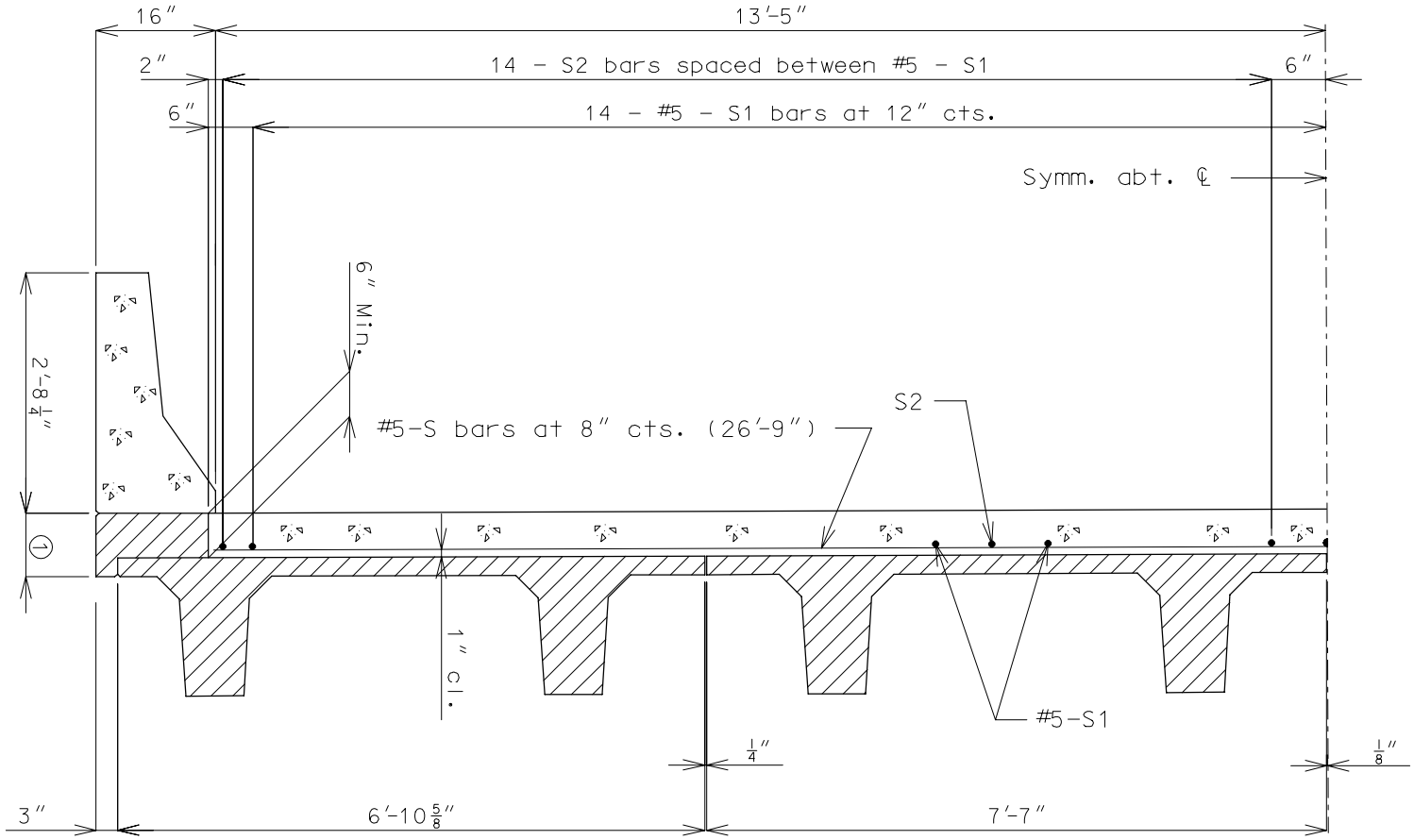

HALF SECTION NEAR INT. BENT

① 2-1/2" + Theoretical slab thickness.

Note: S2 bars at Int. Bents for negative moment reinforcement.

26'-10" ROADWAY (HS20 & HS20 MILITARY) SLAB REINFORCEMENT (CONT.)

Reinforcement

NEGATIVE MOMENT REINFORCEMENT

ADDITIONAL BARS (S2) OVER INT. BENTS			
Girder Seq. No.	No. of add bars	Size of Neg. Mom. Reinf.	Length (✳)
130	28	#5	8'-0"
140	28	#5	8'-0"
151	28	#5	8'-0"
220	28	#5	8'-0"
230	28	#5	8'-0"
240	28	#5	8'-0"
251	28	#5	8'-0"
262	28	#6	8'-0"
320	28	#5	8'-0"
330	28	#5	8'-0"
340	28	#5	8'-0"
351	28	#5	9'-0"
362	28	#6	9'-0"
372	28	#7	10'-0"
383	28	#7	11'-0"

✳ Length each side from ℄ Int. Bent. For unequal spans use greater length on both sides of Int. Bent.

26′-10″ ROADWAY (HS20 & HS20 MILITARY) SLAB REINFORCEMENT (CONT.)

Reinforcement

✳ Skewed Girders

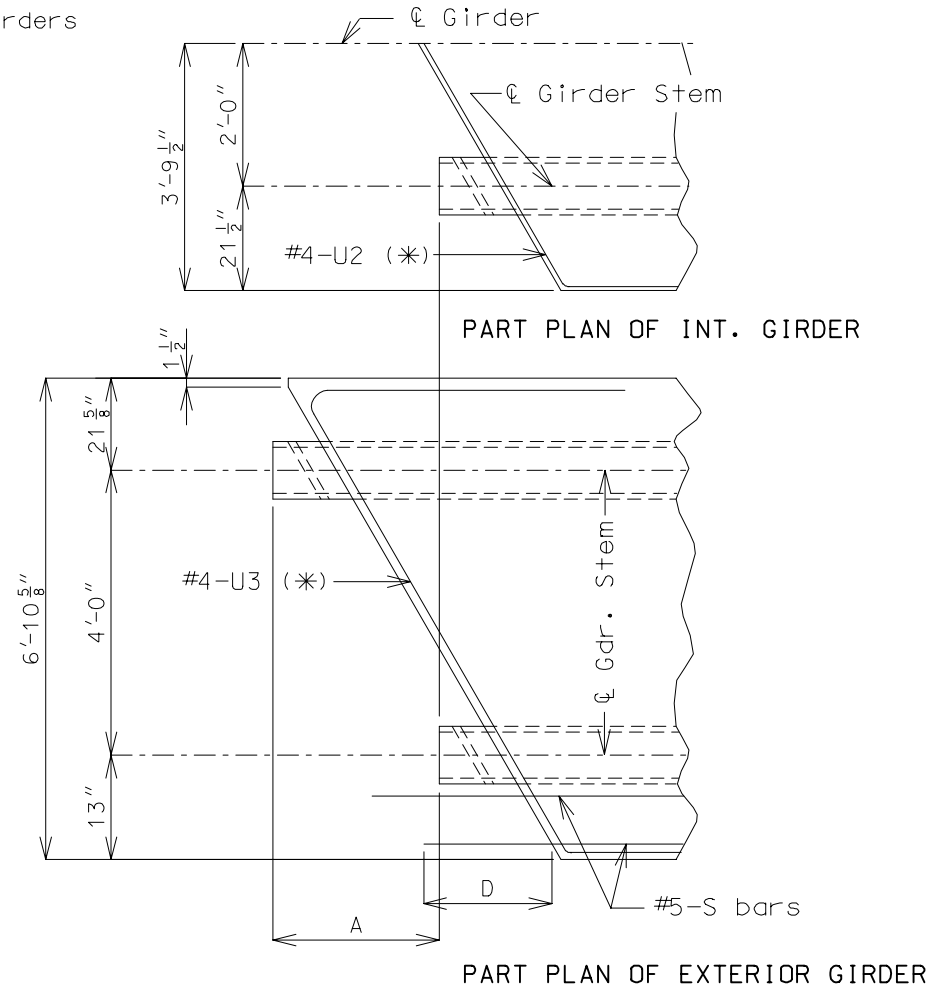

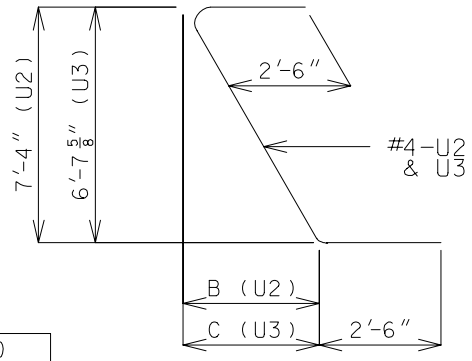

SHAPE 21 (✳)

Skew Angle	A	B	C	D
0°	–	–	–	20″
10°	8 1/2″	15 1/2″	14″	21″
20°	17 1/2″	2′-8″	2′-5″	22″
30°	2′-3 3/4″	4′-2 3/4″	3′-10″	2′-0″
40°	3′-4 1/4″	6′-1 7/8″	5′-6 7/8″	2′-3″

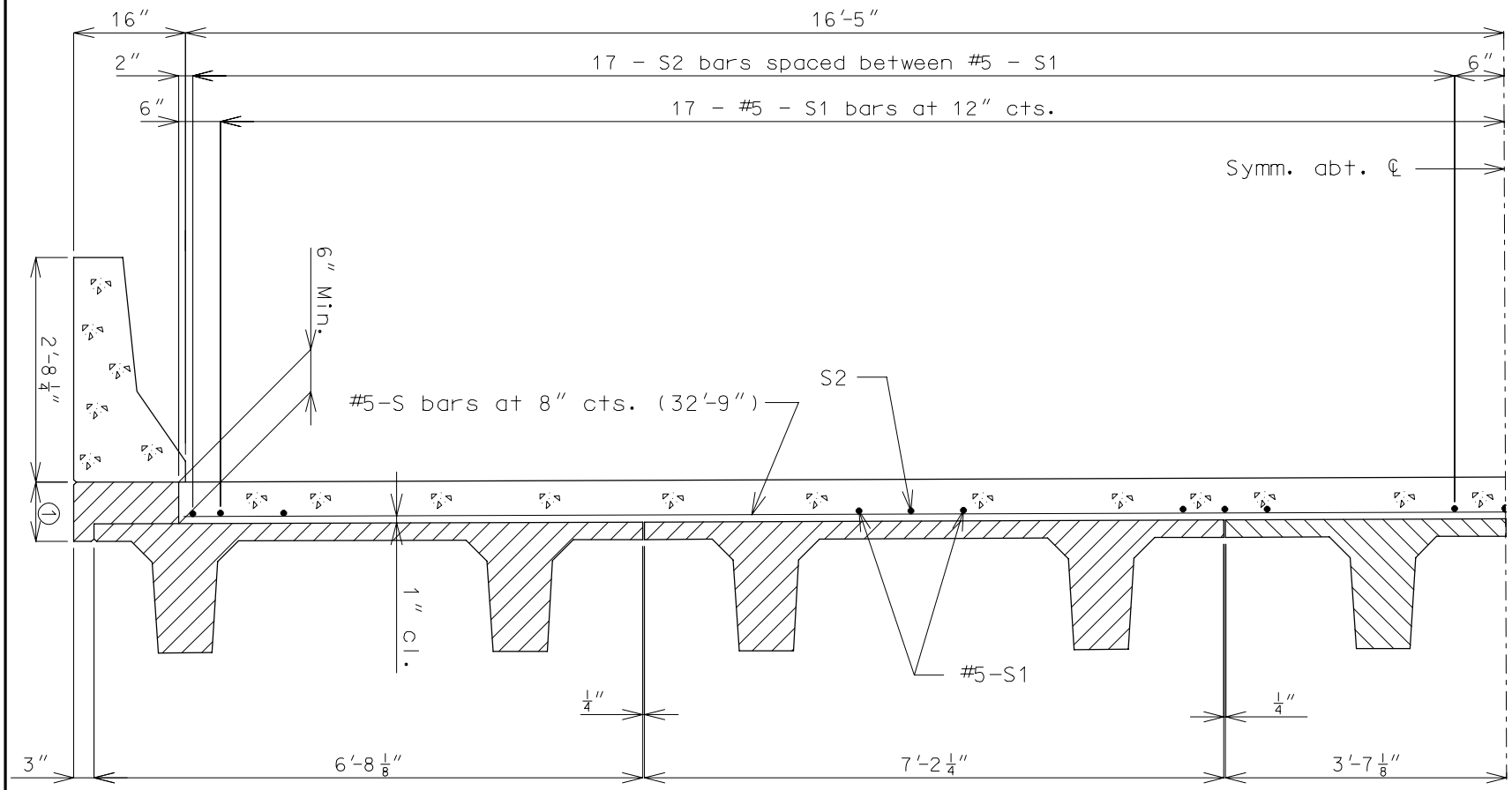

HALF SECTION NEAR INT. BENT

① 2-1/2" + Theoretical slab thickness.

Note: S2 bars at Int. Bents for negative moment reinforcement.

32'-10" ROADWAY (HS20 & HS20 MILITARY)
SLAB REINFORCEMENT (CONT.)

Reinforcement

NEGATIVE MOMENT REINFORCEMENT

ADDITIONAL BARS (S2) OVER INT. BENTS			
Girder Seq. No.	No. of add bars	Size of Neg. Mom. Reinf.	Length (✳)
130	34	#5	8'-0"
140	34	#5	8'-0"
151	34	#5	8'-0"
220	34	#5	8'-0"
230	34	#5	8'-0"
240	34	#5	8'-0"
251	34	#5	8'-0"
262	34	#6	8'-0"
320	34	#5	8'-0"
330	34	#5	8'-0"
340	34	#5	8'-0"
351	34	#5	8'-0"
362	34	#6	9'-0"
372	34	#7	10'-0"
383	34	#7	11'-0"

✳ Length each side from ℄ Int. Bent. For unequal spans use greater length on both sides of Int. Bent.

32'-10" ROADWAY (HS20 & HS20 MILITARY) SLAB REINFORCEMENT (CONT.)

Reinforcement

✳ Skewed Girders

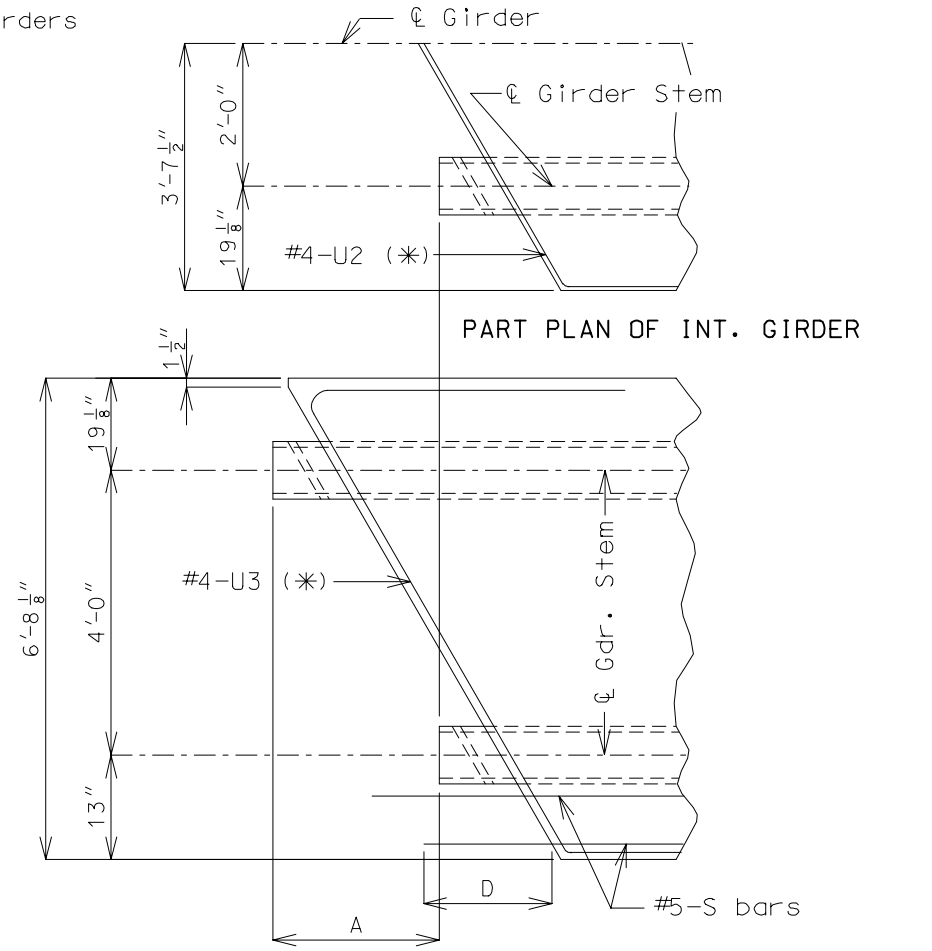

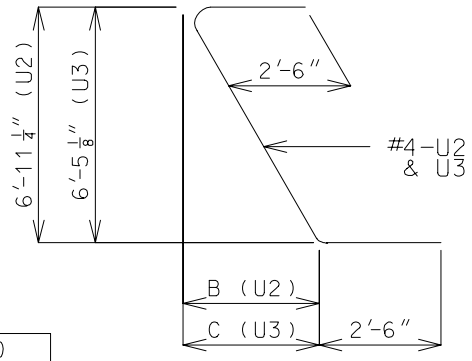

SHAPE 21 (✳)

Skew Angle	A	B	C	D
0°	–	–	–	20"
10°	8 1/2"	14 5/8"	13 5/8"	21"
20°	17 1/2"	2'-6 1/4"	2'-4 1/8"	22"
30°	2'-3 3/4"	4'-0 1/8"	3'-8 1/2"	2'-0"
40°	3'-4 1/4"	5'-9 7/8"	5'-4 3/4"	2'-3"

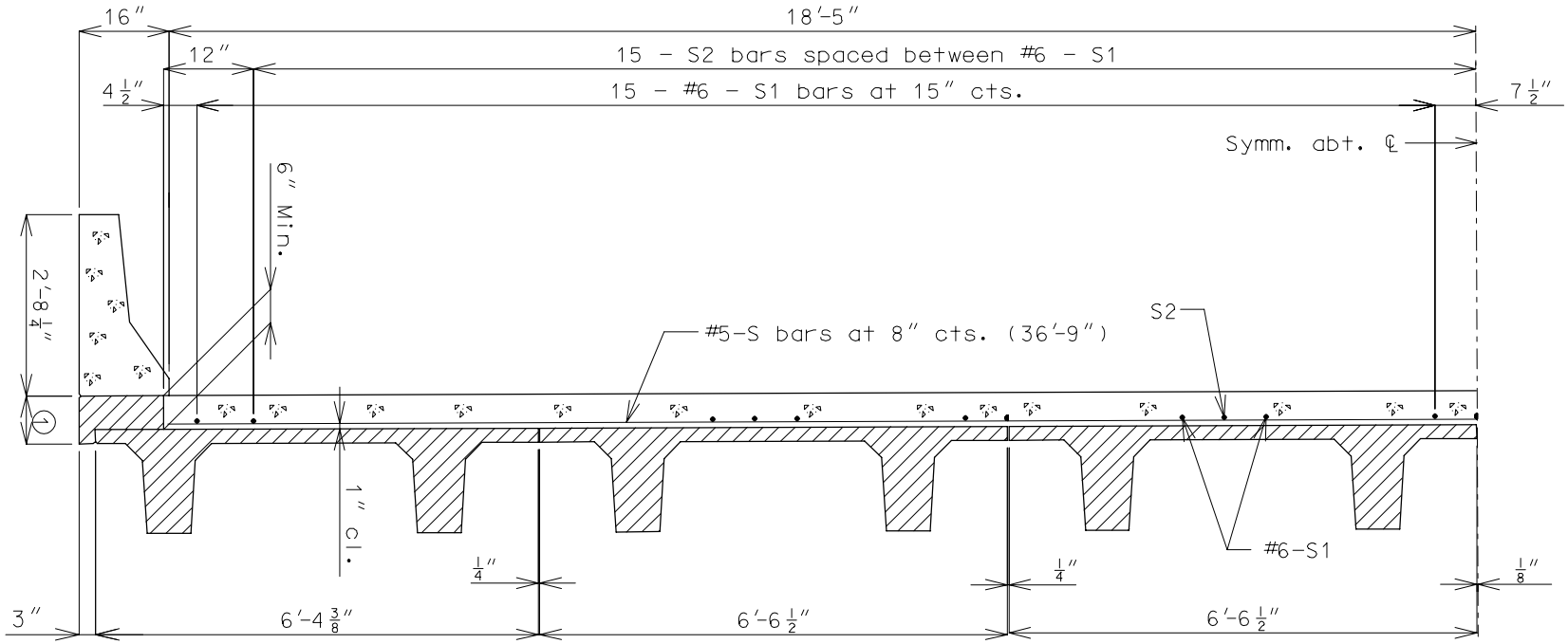

HALF SECTION NEAR INT. BENT

① 2-1/2" + Theoretical slab thickness.

Note: S2 bars at Int. Bents for negative moment reinforcement.

36'-10" ROADWAY (HS20 & HS20 MILITARY)
SLAB REINFORCEMENT (CONT.)

NEGATIVE MOMENT REINFORCEMENT

ADDITIONAL BARS (S2) OVER INT. BENTS			
Girder Seq. No.	No. of add bars	Size of Neg. Mom. Reinf.	Length (✳)
130	29	#5	8'-0"
140	29	#5	8'-0"
151	29	#7	8'-0"
230	29	#5	8'-0"
240	29	#5	8'-0"
251	29	#5	8'-0"
262	29	#5	8'-0"
320	29	#5	8'-0"
330	29	#5	8'-0"
340	29	#5	8'-0"
351	29	#5	8'-0"
362	29	#6	8'-0"
372	29	#6	10'-0"
383	29	#7	15'-0"

✳ Length each side from ℄ Int. Bent. For unequal spans use greater length on both sides of Int. Bent.

36'-10" ROADWAY (HS20 & HS20 MILITARY) SLAB REINFORCEMENT (CONT.)

Reinforcement

✳ Skewed Girders

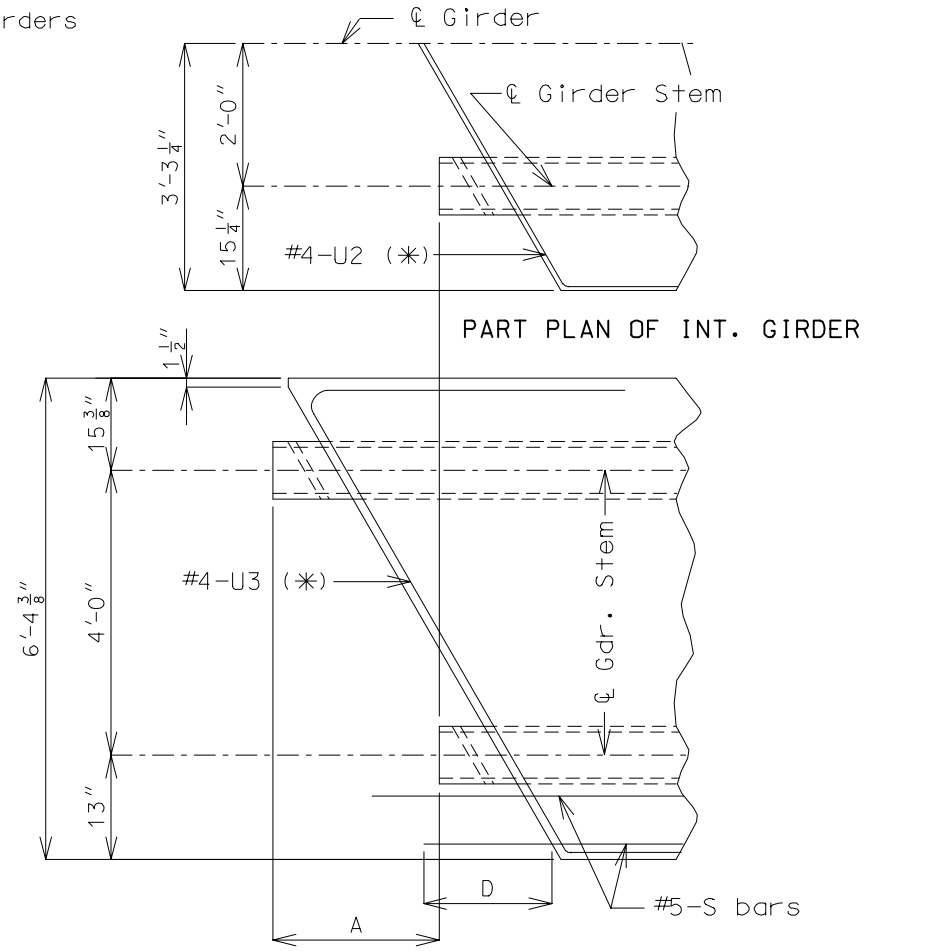

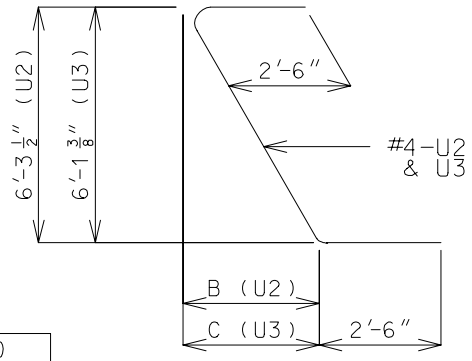

SHAPE 21 (✳)

Skew Angle	A	B	C	D
0°	–	–	–	20"
10°	8 1/2"	13 1/4"	13"	21"
20°	17 1/2"	2'-3 1/2"	2'-2 3/4"	22"
30°	2'-3 3/4"	3'-7 5/8"	3'-6 3/8"	2'-0"
40°	3'-4 1/4"	5'-3 3/8"	5'-1 5/8"	2'-3"

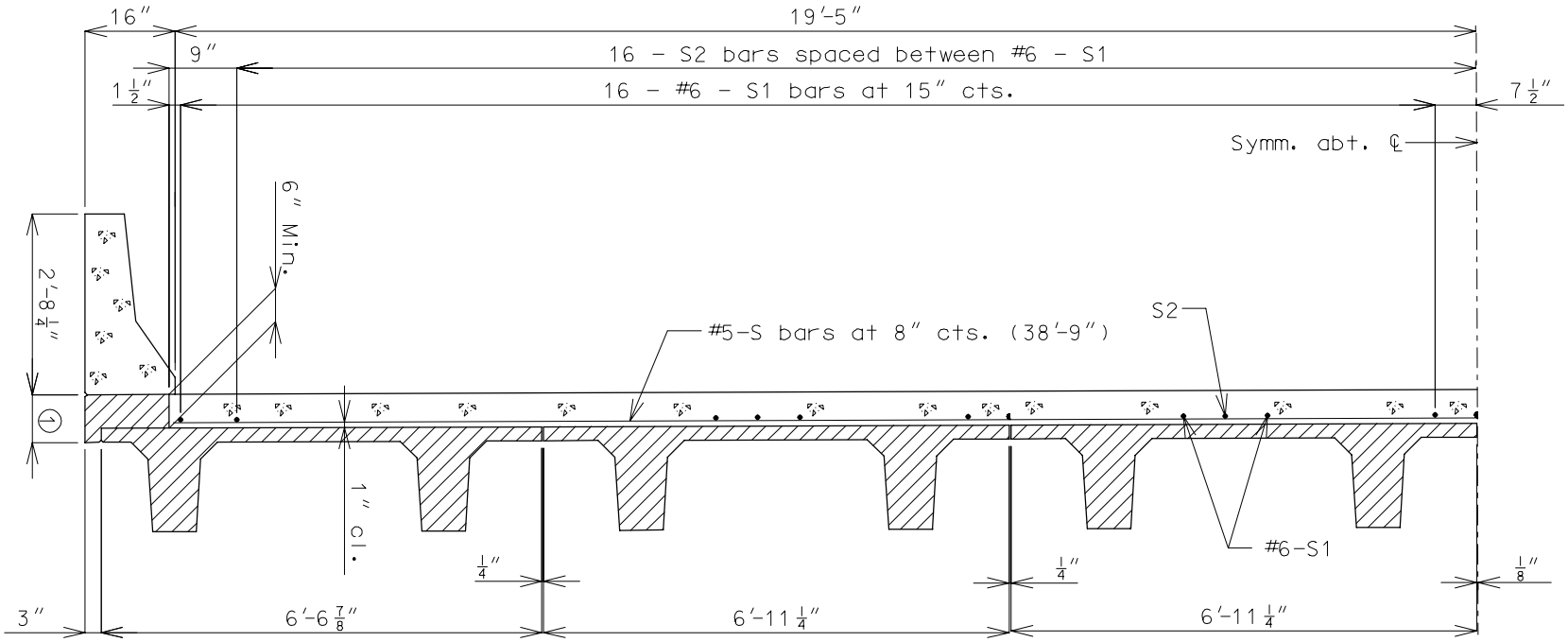

HALF SECTION NEAR INT. BENT

① 2-1/2" + Theoretical slab thickness.

Note: S2 bars at Int. Bents for negative moment reinforcement.

38'-10" ROADWAY (HS20 & HS20 MILITARY)
SLAB REINFORCEMENT (CONT.)

NEGATIVE MOMENT REINFORCEMENT

ADDITIONAL BARS (S2) OVER INT. BENTS			
Girder Seq. No.	No. of add bars	Size of Neg. Mom. Reinf.	Length (✳)
130	31	#5	8'-0"
140	31	#5	8'-0"
151	31	#7	8'-0"
230	31	#5	8'-0"
240	31	#5	8'-0"
251	31	#5	8'-0"
262	31	#5	8'-0"
320	31	#5	8'-0"
330	31	#5	8'-0"
340	31	#5	8'-0"
351	31	#7	8'-0"
362	31	#7	8'-0"
372	31	#7	10'-0"
383	31	#7	15'-0"

✳ Length each side from ℄ Int. Bent. For unequal spans use greater length on both sides of Int. Bent.

38'-10" ROADWAY (HS20 & HS20 MILITARY) SLAB REINFORCEMENT (CONT.)

Reinforcement

✳ Skewed Girders

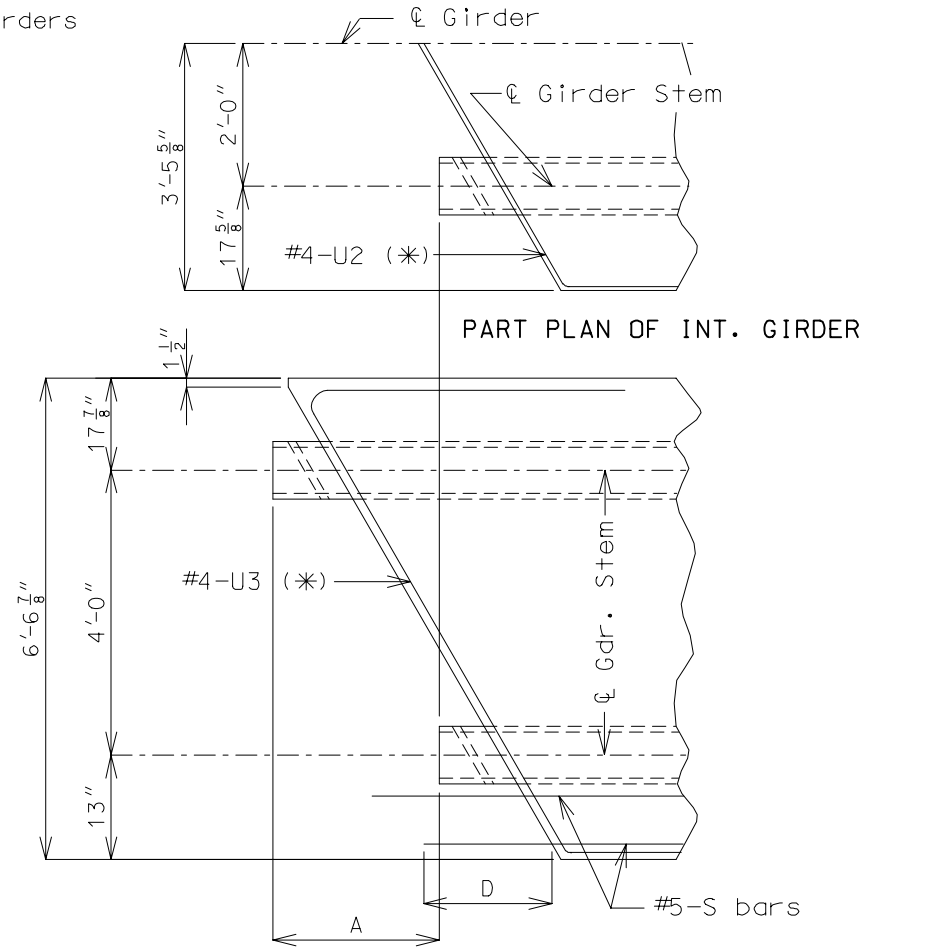

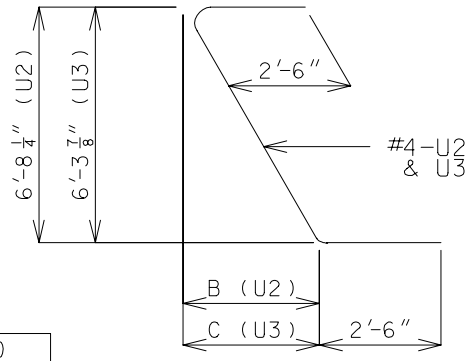

SHAPE 21 (✳)

Skew Angle	A	B	C	D
0°	–	–	–	20"
10°	8 1/2"	14 1/8"	13 3/8"	21"
20°	17 1/2"	2'-5 1/4"	2'-3 5/8"	22"
30°	2'-3 3/4"	3'-10 3/8"	3'-7 3/4"	2'-0"
40°	3'-4 1/4"	5'-7 3/8"	5'-3 5/8"	2'-3"

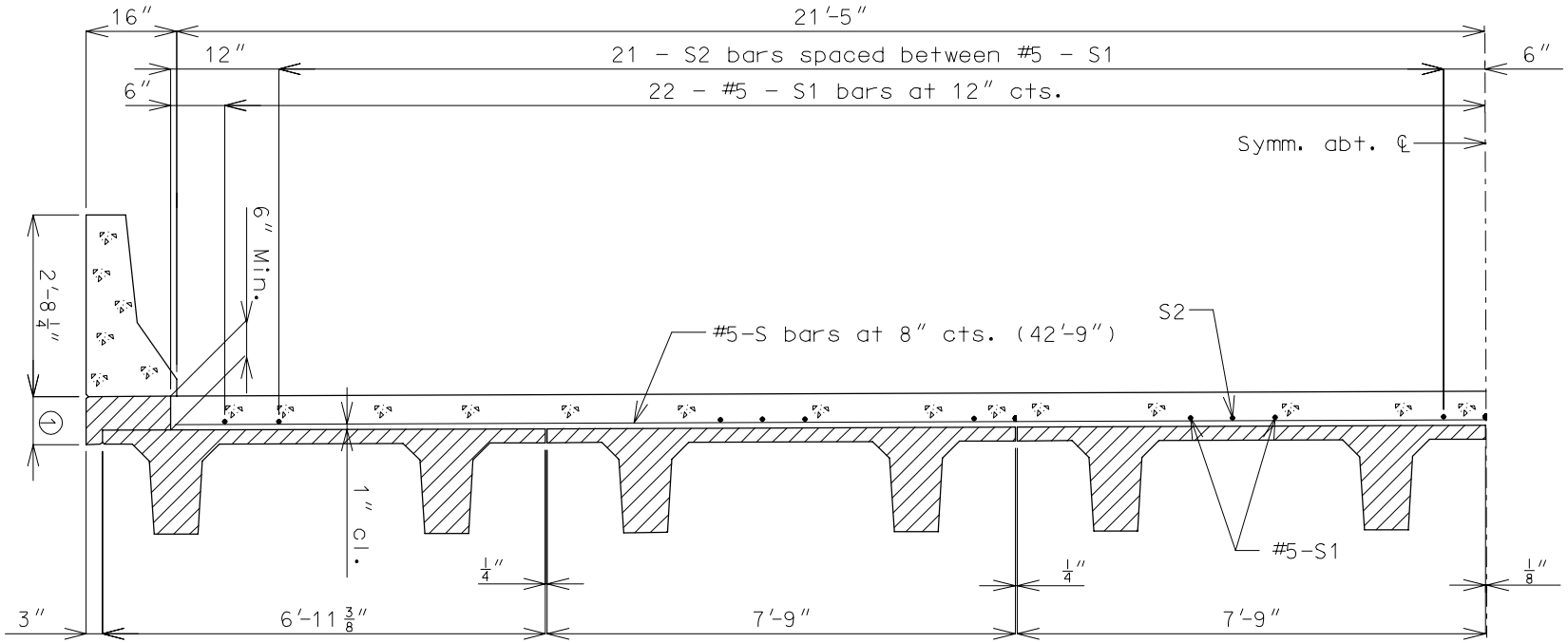

HALF SECTION NEAR INT. BENT

① 2-1/2" + 6" (theoretical slab thickness)Theoretical slab thickness.
Note: S2 bars at Int. Bents for negative moment reinforcement.

42'-10" ROADWAY (HS20 & HS20 MILITARY) SLAB REINFORCEMENT (CONT.)

Reinforcement

NEGATIVE MOMENT REINFORCEMENT

ADDITIONAL BARS (S2) OVER INT. BENTS			
Girder Seq. No.	No. of add bars	Size of Neg. Mom. Reinf.	Length (✳)
140	42	#5	8'-0"
151	42	#5	8'-0"
162	42	#6	8'-0"
230	42	#5	8'-0"
240	42	#5	8'-0"
251	42	#5	8'-0"
262	42	#5	8'-0"
320	42	#5	8'-0"
330	42	#5	8'-0"
340	42	#5	8'-0"
351	42	#5	8'-0"
362	42	#6	12'-6"
383	42	#6	14'-0"

✳ Length each side from ℄ Int. Bent. For unequal spans use greater length on both sides of Int. Bent.

42'-10" ROADWAY (HS20 & HS20 MILITARY) SLAB REINFORCEMENT (CONT.)

Reinforcement

✳ Skewed Girders

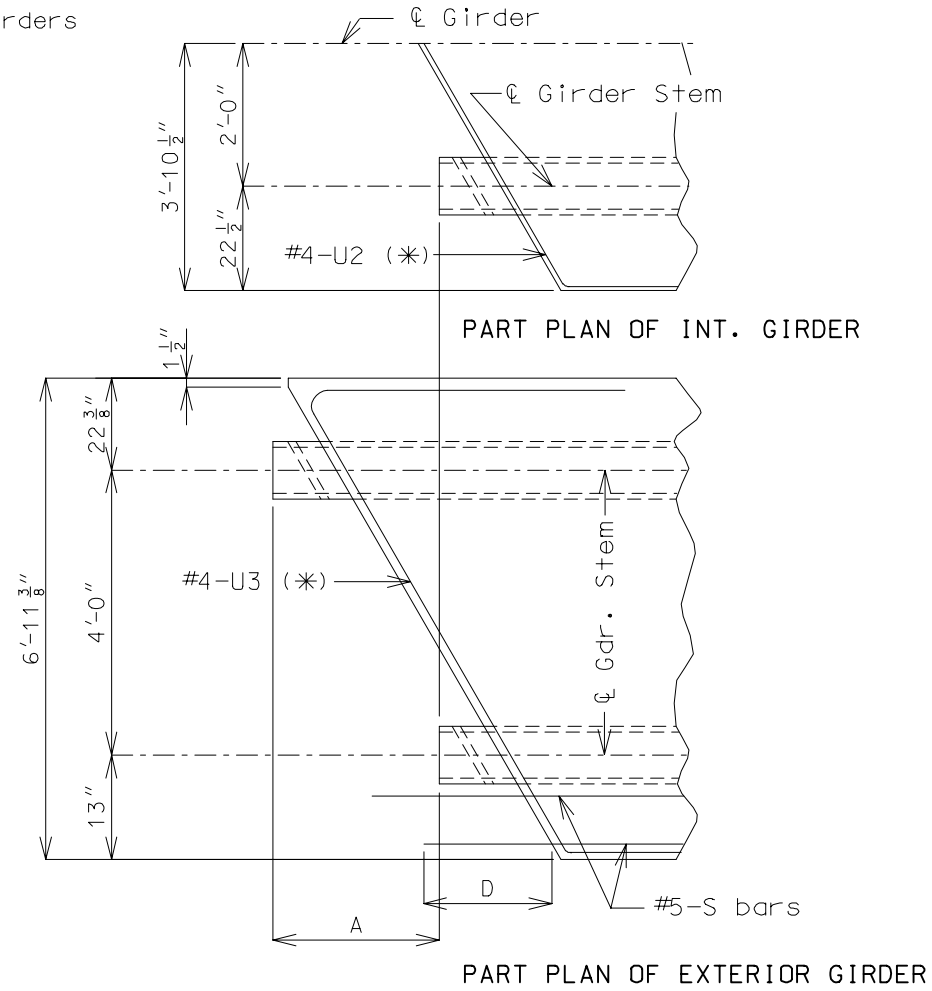

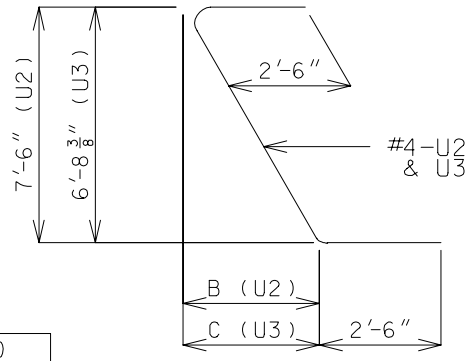

SHAPE 21 (✳)

Skew Angle	A	B	C	D
0°	–	–	–	20"
10°	8 1/2"	15 7/8"	14 1/8"	21"
20°	17 1/2"	2'-8 3/4"	2'-5 1/4"	22"
30°	2'-3 3/4"	4'-4"	3'-10 3/8"	2'-0"
40°	3'-4 1/4"	6'-3 1/2"	5'-7 1/2"	2'-3"

WHEEL LINE REACTIONS

End Bents

Span Length ℄ to ℄ Bt. (ft.)	Lane Loading (W.L.) Kips	Truck Loading (W.L.) Kips	
	H20 & HS20 Military	H20	HS20 Military
20′	15.8	16.8	19.4
21′	15.9	17.0	19.9
22′	16.1	17.1	20.3
23′	16.2	17.2	20.7
24′	16.4	17.3	21.1
25′	16.5	17.4	21.5
26′	16.6	17.5	21.9
27′	16.8	17.6	22.2
28′	16.9	17.6	22.5
29′	17.1	17.7	22.9
30′	17.2	17.8	23.2
31′	17.3	17.8	23.6
32′	17.5	17.9	23.9
33′	17.6	18.0	24.2
34′	17.8	18.0	24.5
35′	17.9	18.1	24.8
36′	18.0	18.1	25.0
37′	18.2	18.2	25.3
38′	18.3	18.2	25.6
39′	18.5	18.3	25.8
40′	18.6	18.3	26.0
41′	18.7	18.3	26.2
42′	18.9	18.4	26.4
43′	19.0	18.4	26.7
44′	19.2	18.4	26.9
45′	19.3	18.5	27.0
46′	19.4	18.5	27.2
47′	19.6	18.5	27.4
48′	19.7	18.6	27.6
49′	19.9	18.6	27.7
50′	20.0	18.6	27.9
51′	20.1	18.7	28.0
52′	20.3	18.7	28.2
53′	20.4	18.7	28.3
54′	20.6	18.7	28.4
55′	20.7	18.7	28.6

Note:
Wheel line are based upon 2 equal spans for continuous structures.
Wheel line reactions do not include impact or distribution factor.

END BENT DETAILS
WING BRACE REINFORCEMENT

End Bents

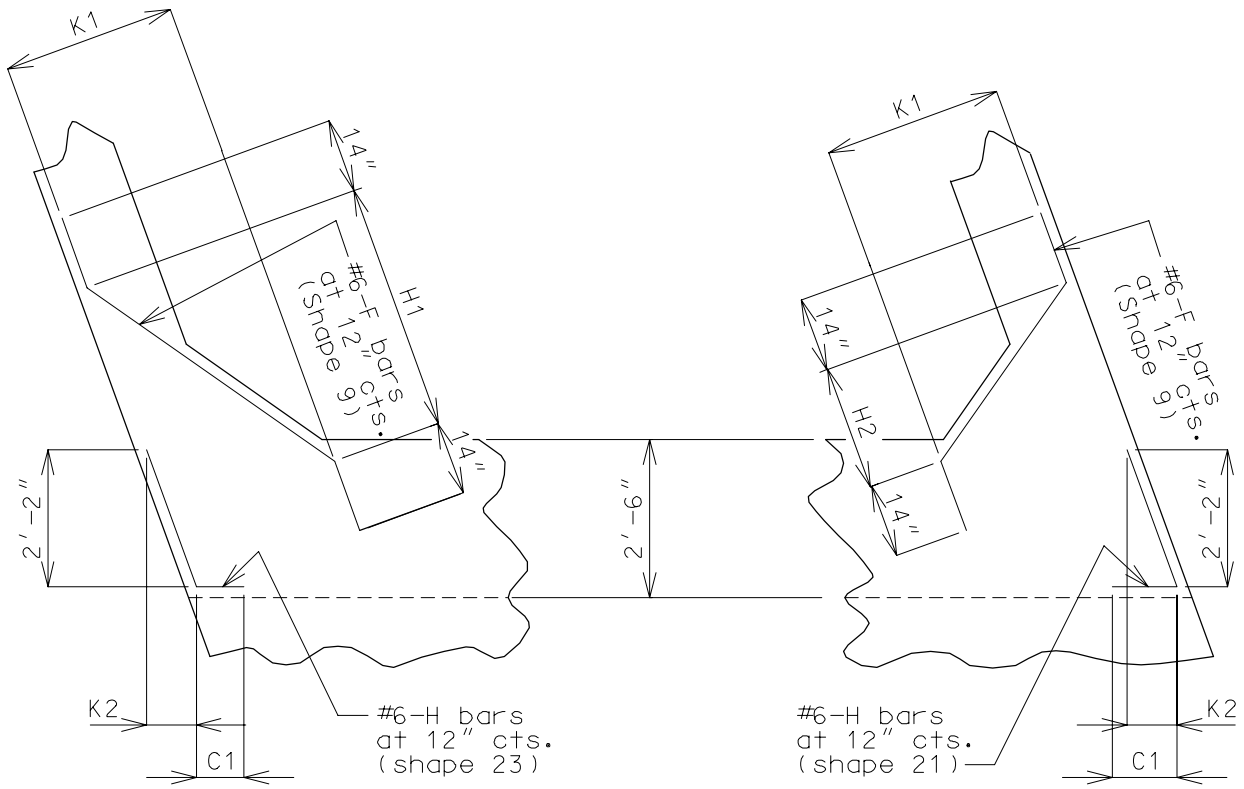

PART SECTION AT END BENT
SHOWING REINFORCEMENT

Skew	H1	H2	K1	K2	C1
0°	3'-1"	3'-1"	3'-1"	---	9"
10°	3'-8"	2'-7"	3'-1"	4 5/8"	9 1/4"
20°	4'-3 3/8"	2'-1 1/4"	3'-0"	9 1/2"	9 1/2"
30°	5'-2 3/8"	20 3/4"	3'-0"	15"	10 1/2"
40°	5'-10 3/4"	15 3/8"	2'-9"	21 7/8"	11 3/4"

END BENT REINFORCEMENT

End Bents

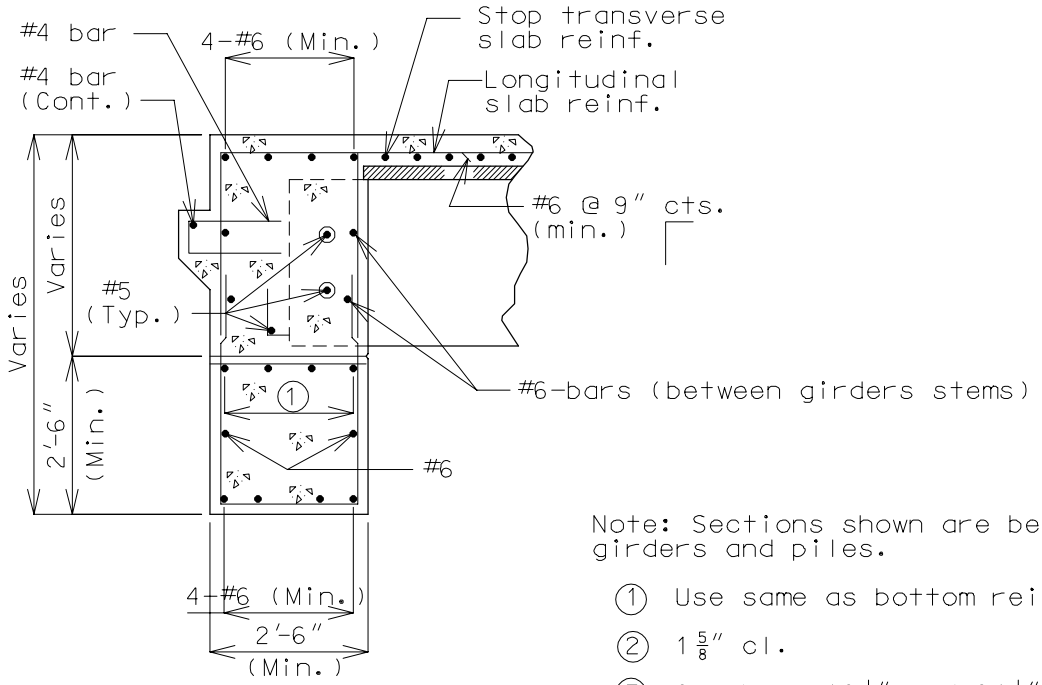

SECTION THRU SQUARE END BENT

Note: Sections shown are between girders and piles.

1. Use same as bottom reinforcement.
2. $1\frac{5}{8}$" cl.
3. 2 - bars $18\frac{1}{2}$" and $24\frac{1}{2}$" girders,
   3 - bars $32\frac{1}{2}$" girder.

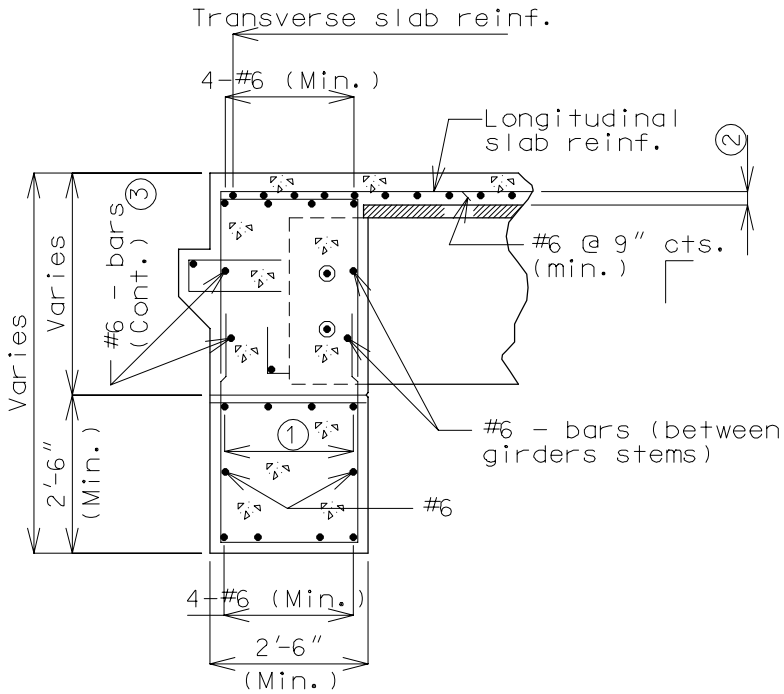

SECTION THRU SKEWED END BENT

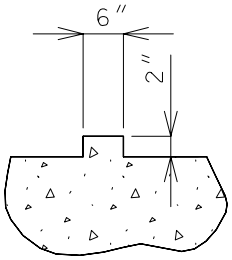

PART SECTION THRU KEYS (END BENTS)

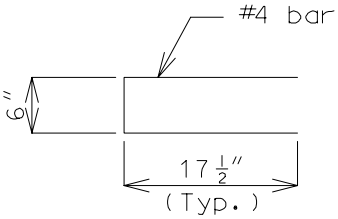

SHAPE 10

DIAPHRAGM REINFORCEMENT

End Bents

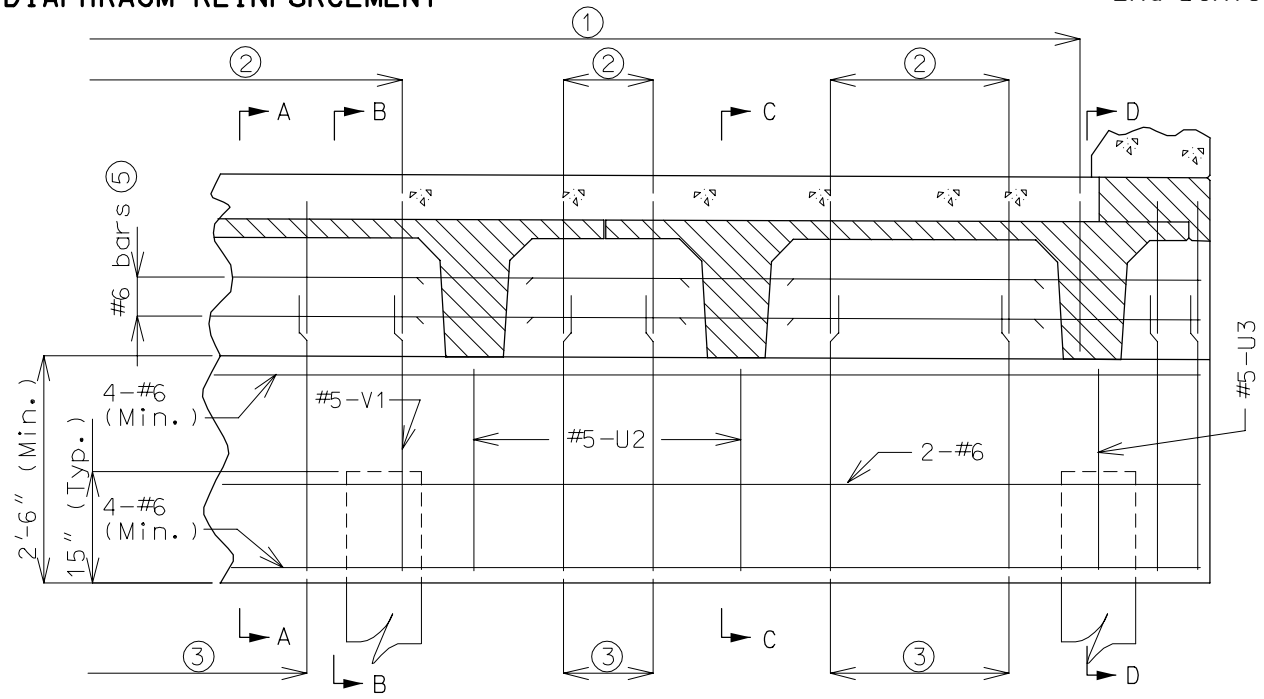

PART SECTION NEAR END BENT

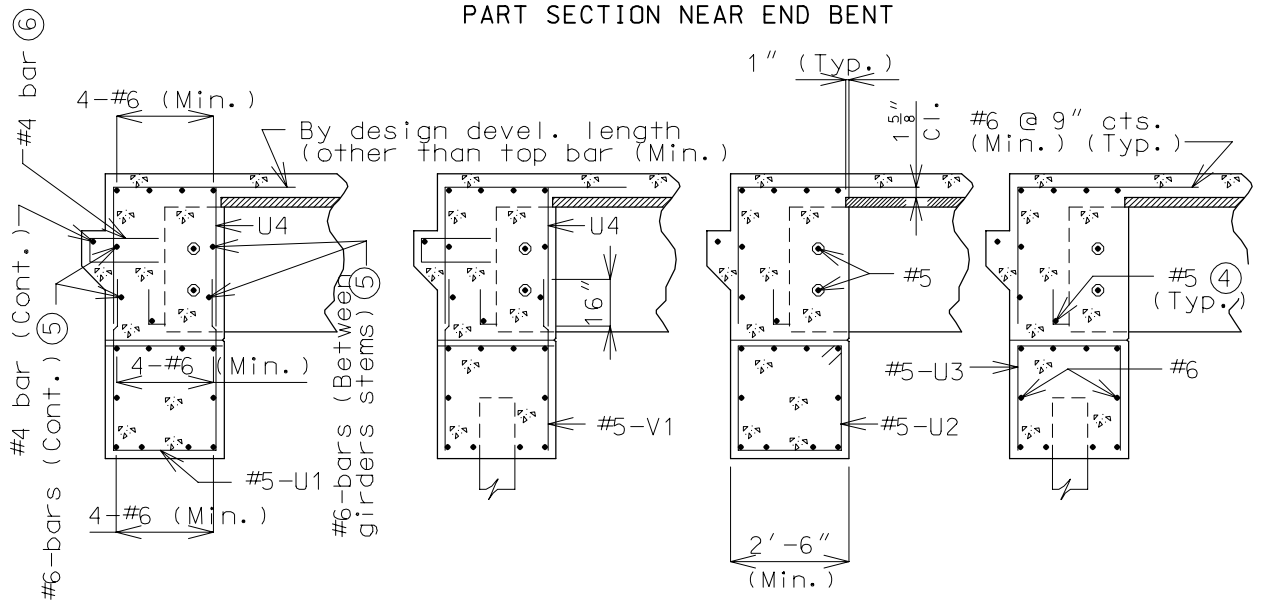

SECTION A-A SECTION B-B SECTION C-C SECTION D-D

1. #6 @ 9" cts. ⌐ (Horiz. leg placed parallel to ℄ Roadway.)
2. #5 - U4 @ 12" cts. ⊓ spaced with U1 and V1 bars.
3. #5 - U1 @ 12" cts. ⊔ spaced between piles and girders. (Replace U1 bars with U3 bars at piles under girders and with V1 bars at piles between girders)
4. #5 bar at bottom of bent-up strands.
5. 2 - bars 18½" and 24½" girders, 3 - bars 32½" girder.
6. #4 bars ⊏ spaced with U1 and V1 bars.

WHEEL LINE REACTIONS

Intermediate Bents

Span Length ℄ to ℄ Bt. (ft.)	Lane Loading (W.L.) Kips	Truck Loading (W.L.) Kips	
	H20 & HS20 Military	H20	H20 & HS20 Military
20′	21.0	17.8	24.8
21′	21.4	17.9	25.6
22′	21.8	18.1	26.4
23′	22.2	18.2	27.1
24′	22.6	18.4	27.8
25′	23.0	18.5	28.4
26′	23.4	18.6	28.9
27′	23.8	18.7	29.4
28′	24.2	18.8	29.8
29′	24.6	18.8	30.2
30′	25.0	18.9	30.5
31′	25.4	19.0	30.8
32′	25.8	19.0	31.1
33′	26.2	19.1	31.5
34′	26.6	19.1	31.6
35′	27.0	19.2	31.9
36′	27.4	19.2	32.1
37′	27.8	19.3	32.3
38′	28.2	19.3	32.5
39′	28.6	19.3	32.6
40′	29.0	19.4	32.8
41′	29.4	19.4	32.9
42′	29.8	19.4	33.1
43′	30.2	19.4	33.2
44′	30.6	19.5	33.3
45′	31.0	19.5	33.4
46′	31.4	19.5	33.5
47′	31.8	19.5	33.6
48′	32.2	19.5	33.7
49′	32.6	19.6	33.8
50′	33.0	19.6	33.9
51′	33.4	19.6	34.0
52′	33.8	19.6	34.0
53′	34.2	19.6	34.1

Note:
Wheel line are based upon 2 equal spans for continuous structures.
Wheel line reaction is total used for Intermediate Bent design.
Wheel line reaction does not include impact or distribution factor.

DIAPHRAGM REINFORCEMENT

Intermediate Bents

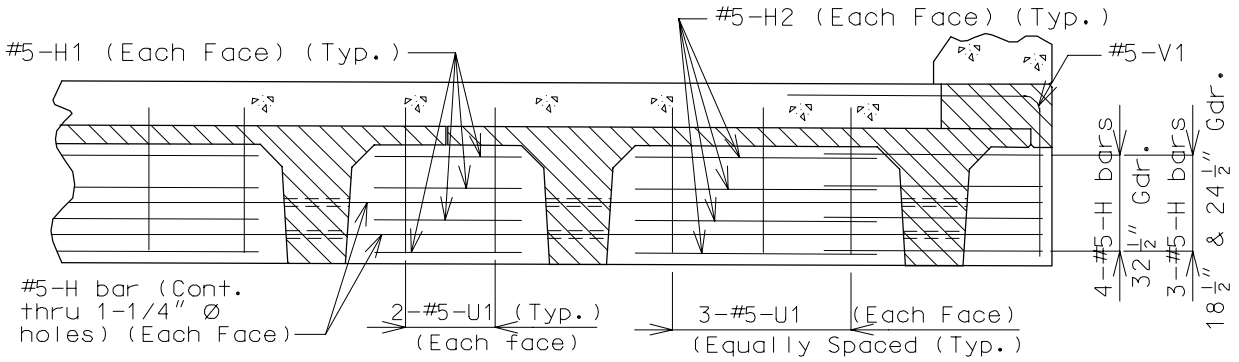

PART SECTION NEAR INT. BENT DIAPH.

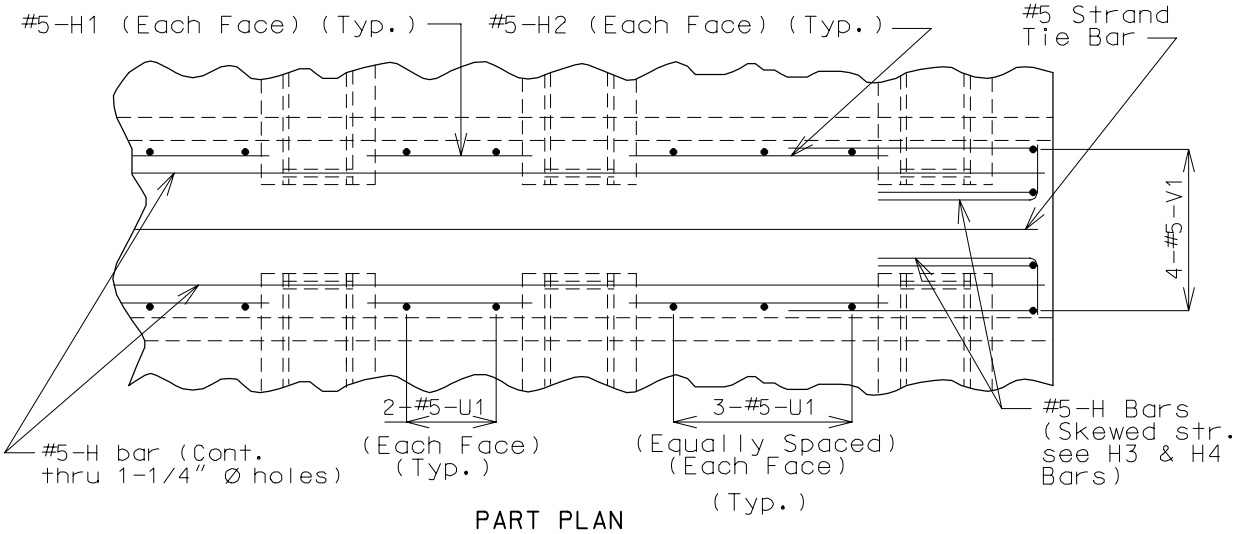

PART PLAN

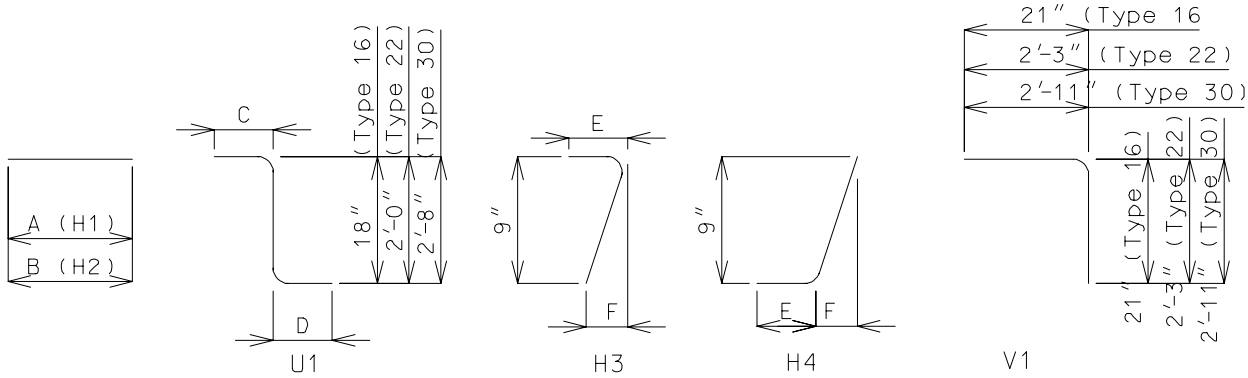

Skew	A	B	C	D	E	F
0°	✳	3'-0"	12"	19"	2'-11"	0
10°	✳	3'-0"	12"	19 1/4"	3'-0"	1 5/8"
20°	✳	3'-2"	12"	20 1/4"	3'-2"	3 1/4"
30°	✳	3'-5"	12"	22"	3'-5"	5 1/4"
40°	✳	3'-11"	12"	2'-0 3/4"	3'-10"	7 1/2"

✳ Varies with roadway and skew.

DIAPHRAGM TIE DETAILS

End bent and Intermediate Bent Details

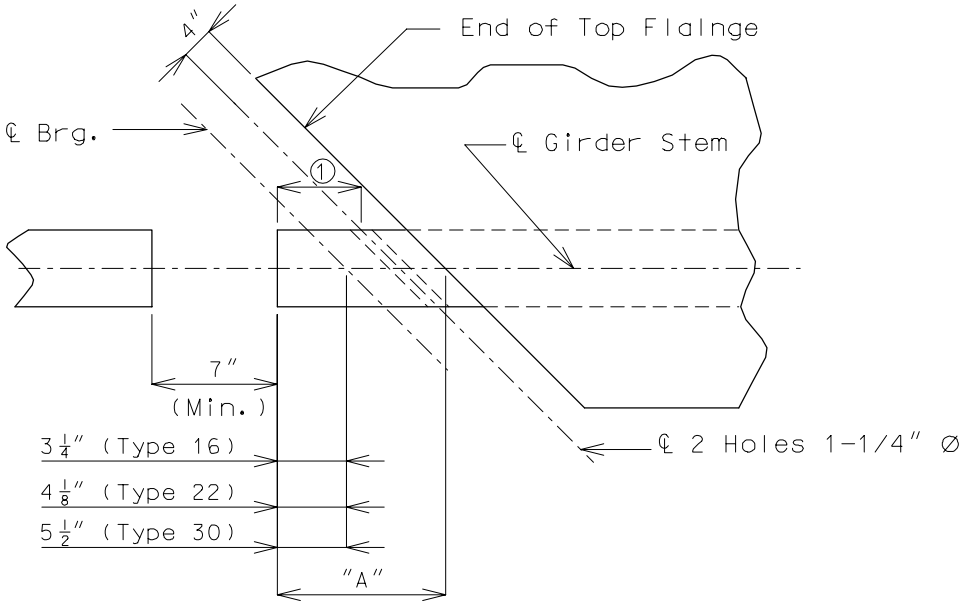

① 2" (Min.) (Only necessary to check for curved structures on large skews.)

PART PLAN NEAR END OF STEM

DIMENSION "A"						
END BENT "A"					INT. BENT "A" (✳)	
Skew	Type 16	Type 22	Type 30		Skew	All Gdrs.
0°	17 1/4"	18 1/8"	19 1/2"		0°	7 1/2"
10°	17 1/2"	18 3/8"	19 3/4"		10°	7 5/8"
20°	18 1/8"	19"	20 3/8"		20°	8 1/4"
30°	19 3/8"	20 1/4"	21 5/8"		30°	9 1/4"
40°	21 1/2"	22 3/8"	23 3/4"		40°	10 7/8"

✳ Based on a 2'-6" wide int. bent pile cap beam with a 2'-0" wide concrete diaphragm on top.

DIAPHRAGM TIE DETAILS (CONT.) End bent and Intermediate Bent Details

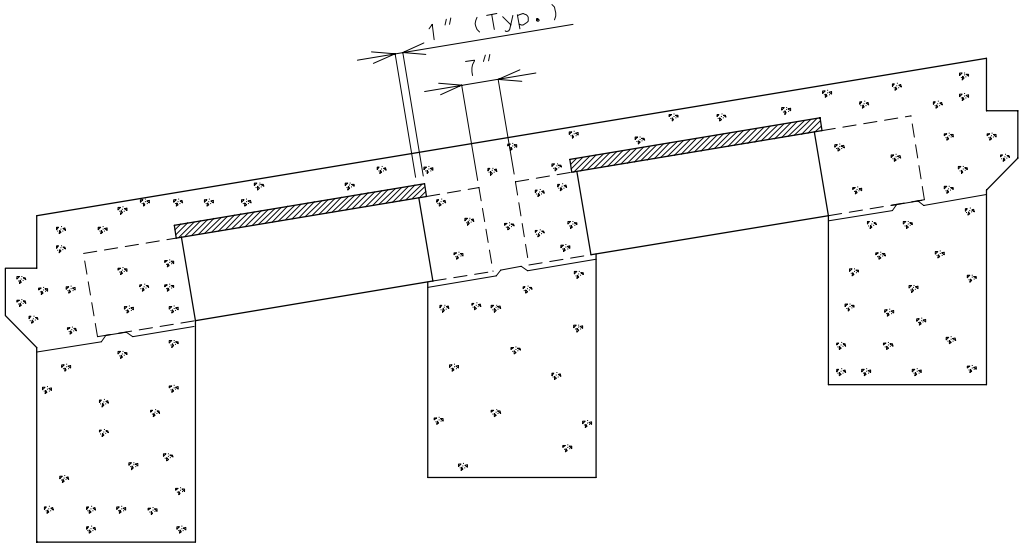

DETAILS OF DIAPH. AT BENTS
AT EXTREME GRADES (✳)

Girder Type	Grades Over (✳)
Type 16	5%
Type 22	4%
Type 30	3%

✳ Slope Diaphrams at extreme grades as shown.

VENT HOLES

End bent and Intermediate Bent Details

Note: Use vent holes on all stream crossing structures.

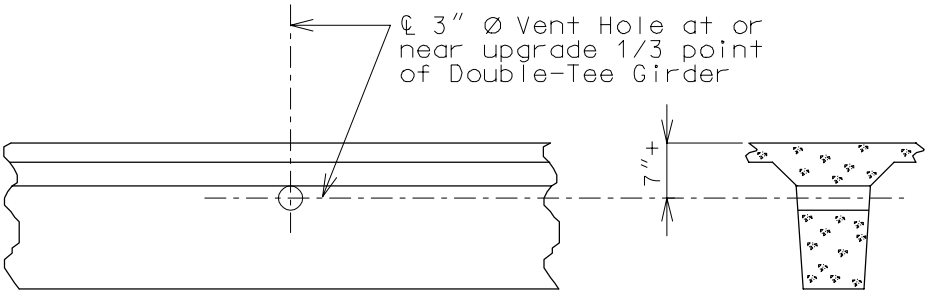

PART ELEVATION OF GIRDER STEM

PART SECTION NEAR VENT HOLE

Note: Place vent holes at or near upgrade 1/3 point of Double-Tee Girders and clear reinforcing steel of strands by $1\frac{1}{2}''$ minimum.

DIAPHRAGM REINFORCEMENT

End bent and Intermediate Bent Details

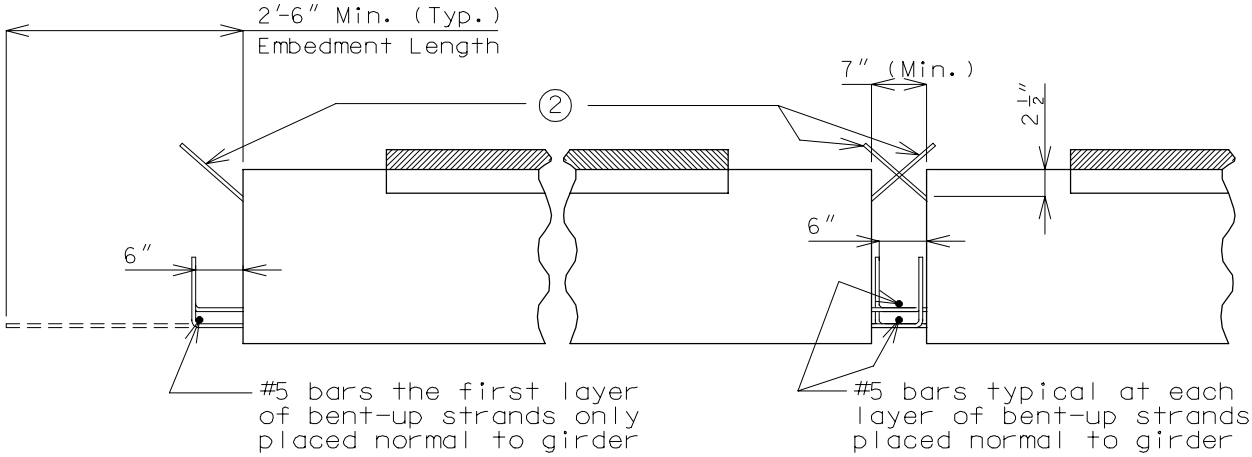

END BENT INT. BENT

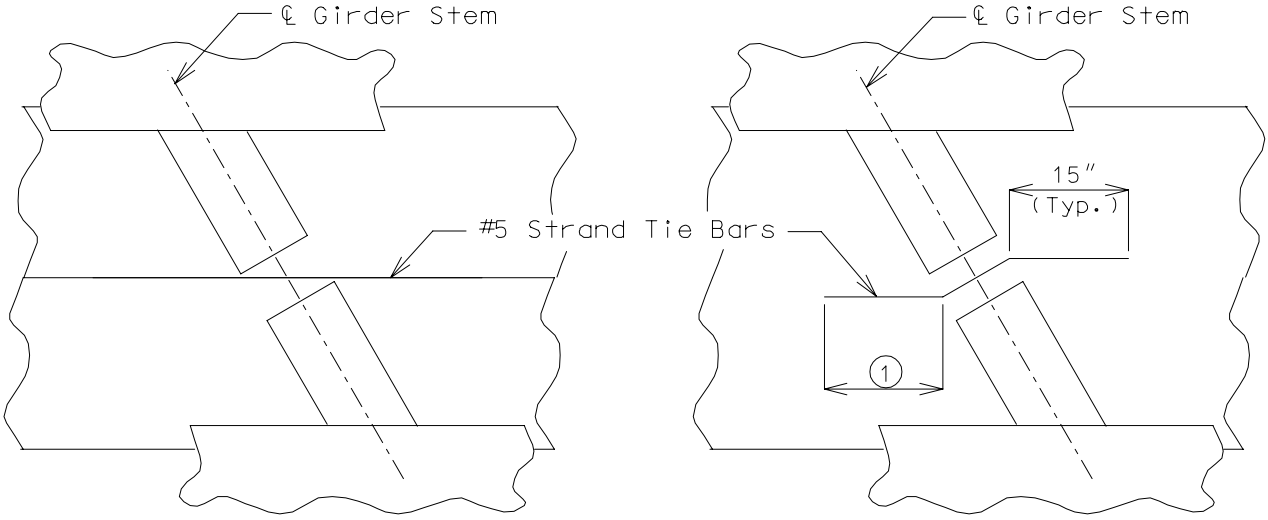

SKEW THRU 30° SKEW OVER 30°

1. Omit leg on outside of exterior girder.
2. Cut top two rows of strands with 12" projection and bend in shop.

DETAIL OF OPTIONAL CONSTRUCTION JOINT

Miscellaneous Details

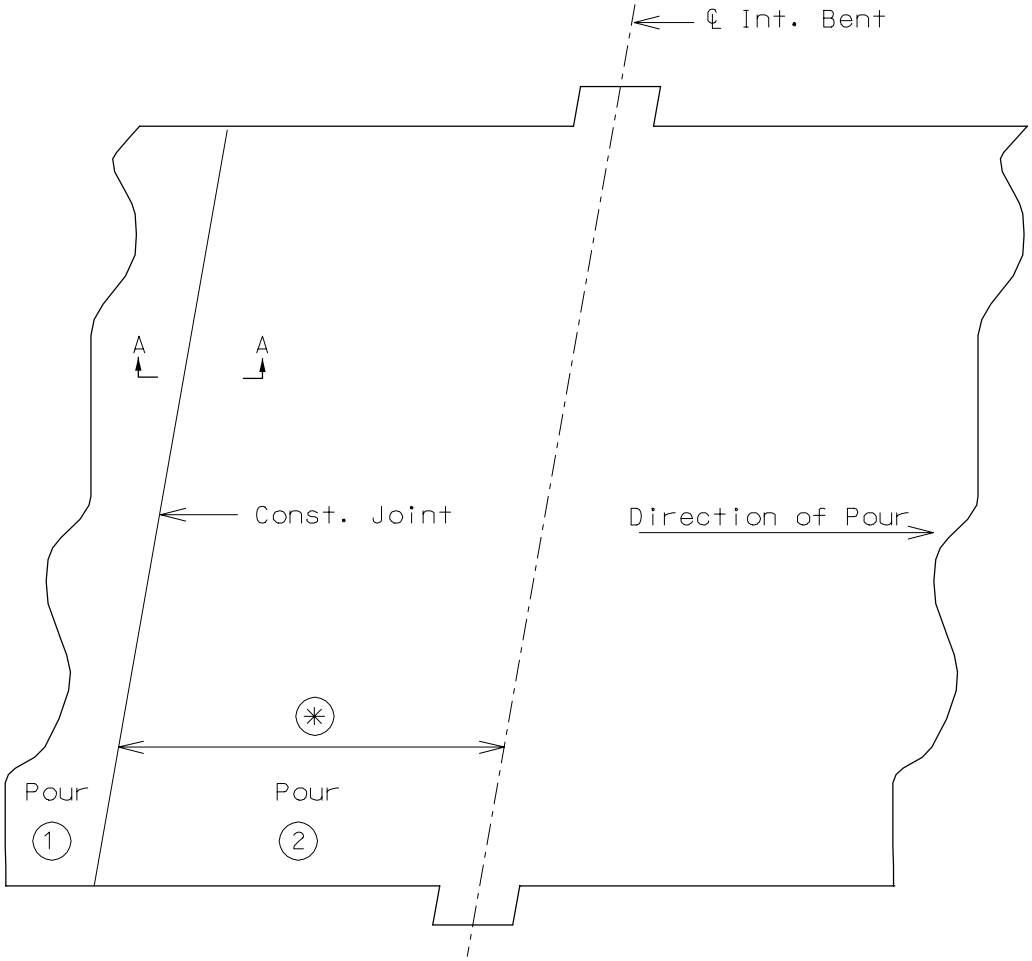

OPTIONAL CONST. JOINT

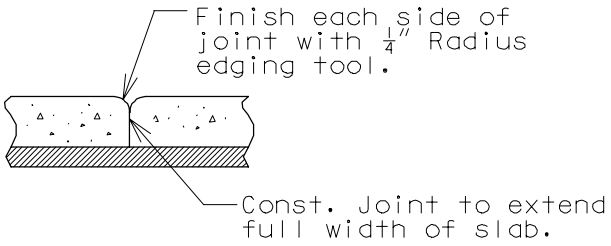

SECTION A-A

✳ Place Const. Joint 6" from negative reinforcement in slab.

Note: Const. Joint placement will be determined by direction of slab pour.

DOWEL BARS
FIXED INTERMEDIATE BENTS

Miscellaneous Details

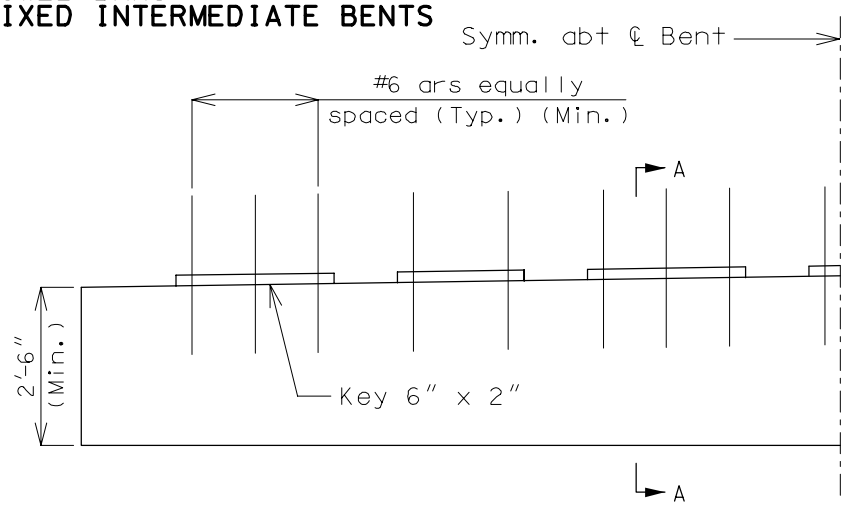

PART ELEVATION

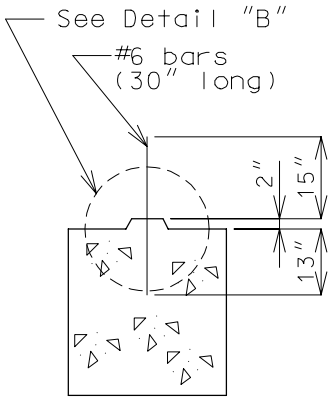

SECTION A-A

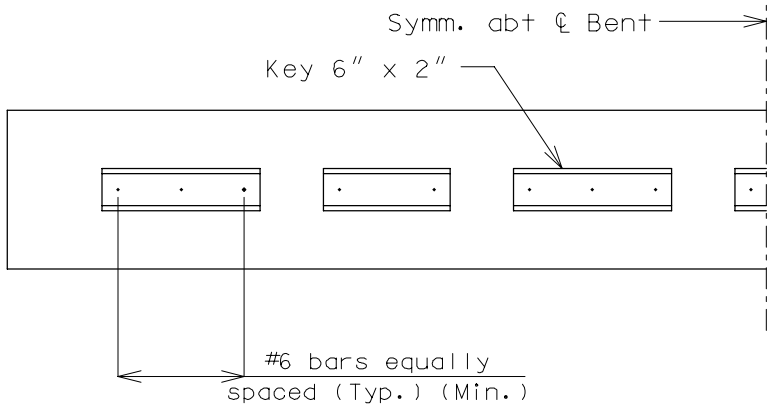

PART PLAN

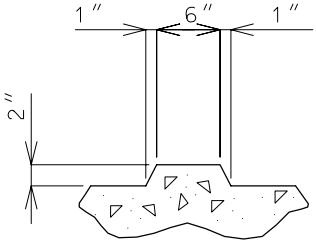

DETAIL "B"

Note:
Dowel bars as shown will be detailed for fixed intermediate bents under prestressed superstructures.

Earthquake category A:
Use #6 bars spaced as shown.

Earthquake categories B, C & D:
Design dowel bars for shear using service load design.
33-1/3% overstress allowed for earthquake loads.

Consult with the Structural Project Manager for situations not clearly covered by the above criteria.

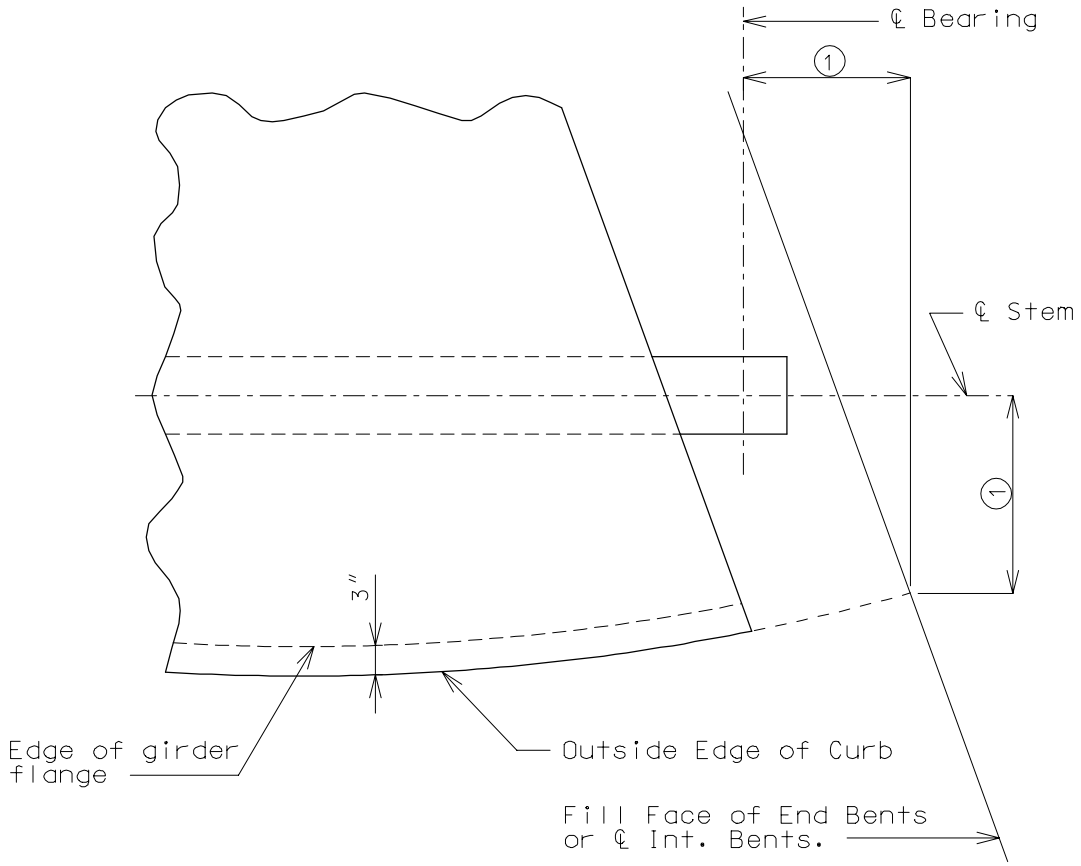

1 Show dimension on plans.