Missouri Department of Transportation

Bridge Division

Bridge Design Manual

Section 3.30

Revised 06/28/2004

Click Here for Index

Index

3.30.1 Concrete Slabs

1.1 Dead Loads to Girder (2 sheets)
1.2 Design Criteria (9 sheets)
1.3 Standard Crown and Profile Grade (4 sheets)
1.4 Details of Concrete Slabs for Structures (9 sheets)
1.5 Resisting Moments (2 sheets)
1.6 Slab Pouring Sequence and Long. Constr. Joint (12 sheets)
1.7 Timber Header
1.8 Blank
1.9 Drip Bevel

3.30.2 Timber Floor

2.1 Design

3.30.3 Steel Grid Bridge Flooring

3.1 General and Details (2 sheets)

3.30.4 Safety Barrier Bridge Curb

4.1 Dimensions (2 sheets)
4.2 Reinforcement (3 sheets)
4.2A Wing Reinforcement (9 sheets)
4.3 SBC for Wing with Detached Wing Wall
4.4 Double-Face Median Barrier Curb Reinforcement (3 sheets)
4.5 Concrete Medians (2 sheets)
(Also, see Missouri Standard Plans
Drawing 617.00 Concrete Traffic Barrier)
4.6 Blank
4.6A Guard Rail Attachment
4.7 Slab Drains (10 sheets)
4.8 Details of Mounting Light Poles on Safety Barrier Curb
4.9 Blank
4.10 Joint and Rustication Details (2 sheets)
4.11 Plastic Waterstop
4.12 Expansion Device Movement Gauge

3.30.5 Blank

3.30.6 Thrie Beam Bridge Rail

6.1 Details (8 sheets)
6.2 Blank
6.3 Horizontal Curve Table

Index

3.30.7 Conduit Systems

7.1 General and Details (3 sheets)

3.30.8 Longitudinal Diagrams

8.1 Hinged Beam Connections (6 sheets)

8.2 Longitudinal Sections (6 sheets)

3.30.9 Miscellaneous Bearing Connections

9.1 Typical Details of "Hinged" Connection (4 sheets)

3.30.10 Chain Link Fence

10.1 Pedestrian Overpass - Galvanized Steel (6 sheets) (Also, see Missouri Standard Plans Drawing 607.11 Chain-Link Fence for Retaining Walls)

3.30.11 Sidewalk

11.1 Details and Reinforcement

DEAD LOAD TO GIRDERS FOR STANDARD SLAB ON PRESTRESS OR STEEL GIRDERS (3" P/C PANELS OR C.I.P.)

ROADWAY	NO. OF GDRS.	LOAD EQUAL TO ALL GIRDERS (DLII) (LBS./FT.)		LOAD TO EACH GIRDER (DLI) (LBS./FT.)		
		SAFETY BARRIER CURB (1)	F.W.S. (2)	SLAB ONLY (✳) (WEIGHT OF HAUNCH NOT INCLUDED)		
				EXT. GDR.	INT. GDR.	CL. GDR.
26'-0"	4	171	228	728	796	_ _ _
28'-0"	4	171	245	749	881	_ _ _
30'-0"	4	171	263	805	932	_ _ _
32'-0"	4	171	280	860	983	_ _ _
36'-0"	5	137	252	735	892	856
38'-0" (Unsymm.)	5	137	266	752	958	903
40'-0"	5	137	280	815	981	945
44'-0"	5	137	308	918	1047	1031

(1) Safety Barrier Curb load is for a 16" curb, curb height = 2'-8".

(2) For F.W.S. = 35 lbs per sq. ft.

(✳) Slab weight is for an 8-1/2" slab thickness.
Haunch weight and additional slab weight due to P/S panels with uniform joint filler is not included.

DEAD LOAD TO GIRDERS FOR S.I.P. FORMS ON CURVED STEEL GIRDERS

ROADWAY	NO. OF GDRS.	LOAD EQUAL TO ALL GIRDERS (DLII) (LBS./FT.)		LOAD TO EACH GIRDER (DLI) (LBS./FT.)		
		SAFETY BARRIER CURB (1)	F.W.S. (2)	SLAB ONLY (✳) (WEIGHT OF HAUNCH NOT INCLUDED)		
				EXT. GDR.	INT. GDR.	CL. GDR.
26'-0"	4	171	228	775	925	_ _ _
28'-0"	4	171	245	800	1021	_ _ _
30'-0"	4	171	263	859	1081	_ _ _
32'-0"	4	171	280	917	1140	_ _ _
36'-0"	5	137	252	786	1038	975
38'-0" (Unsymm.)	5	137	266	805	1113	1029
40'-0"	5	137	280	870	1142	1075
44'-0"	5	137	308	978	1221	1173

(1) Safety Barrier Curb load is for a 16" curb, curb height = 2'-8".

(2) For F.W.S. = 35 lbs per sq. ft.

(✳) Slab weight is for an 8-1/2" cantilever slab thickness and a slab thickness between the girders = 8-1/2"+1-1/4"= 9-3/4".
(Slab is adjusted for a 2-1/2" corragated S.I.P. form)

DESIGN CRITERIA: SLABS ON GIRDERS (AASHTO Art. 3.24)

Stresses

f_c = 1600 psi, f'_c = 4000 psi, n = 8, fy = 60,000 psi

Moments Over Interior Support (Use for positive moment reinf. also) (Sec. 1.5 E40A)

Dead Load = $-0.107wS^2$ (Continuous over 5 supports)
Dead Load = $-0.100wS^2$ (Continuous over 4 supports)

Live Load = (S + 2)P/32 Continuity Factor = 0.8 (AASHTO Art. 3.24.3)
Impact Factor = 1.3
P = 16 Kips for HS20
P = 20 Kips for HS20 Modified

Design Load
$M_U = 1.3(M_{DL} + 1.67M_{LL+I})$

Cantilever Moment (AASHTO Art. 3.24.5)

Dead Load = Moment due to slab, F.W.S. and S.B.C.

Live Load

Wheel Load = M_{LL+I} = Px/E Where: P = Wheel load (apply impact factor)
x = Dist. from load to support (ft.)
E = 0.8x + 3.75

Collision Load = M_{COLL} = Py/E Where: P = 10 kips (Collision force)
y = Moment arm (Curb ht.+ 1/2 Slab th.)
E = 0.8x + 5.0

Where: x = Dist. from C.G. of S.B.C. to support

The "support" is assumed at the $\frac{1}{4}$ pt. of the minimum flange.

Wheel loads and collision loads shall not be applied simultaneously.

Use the greater of the two for the Design Load.

Design Load
$M_U = 1.3(M_{DL} + 1.67M_{LL+I})$

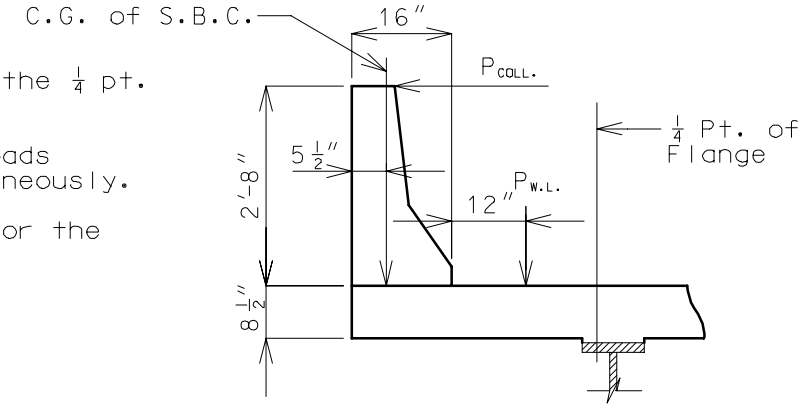

SLAB CANTILEVER SECTION

Design of top reinf. is based on maximum moment over supports or cantilever moment. Flexural reinforcement shall meet the criteria of AASHTO Art. 8.16.3.

When designing for bottom transverse reinforcement, a 1" wearing surface is removed from the effective depth.

Prestressed panels replace the bottom transverse reinforcement.

Prestressed panels are assumed to carry DL1 stresses. Therefore, the negative moment due to DL1 at interior supports may be neglected.

The maximum P/S panel width (clear span + 6") for HS20 Modified is 9'-6". (Based on 10'-0" girder spacing and 10" flanges)
The maximum P/S panel width (clear span + 6") for HS20 is 9'-11".

For concrete slab resisting moment see page 1.5-1 and 1.5-2 of this section.

DESIGN CRITERIA: DISTRIBUTION OF FLEXURAL REINFORCEMENT (AASHTO Art. 8.16.8.4)

Allowable Stress:

$$F_s = \frac{Z}{(d_c \times A)^{1/3}} \leq 0.6 f_y$$

Where:

z = 130 k/in.

d_c = Dist. from extreme tension fiber to center of closest bar (concrete cover shalll not be taken greater than 2″)

A = Effective tension area of concrete = $2 d_c s$

s = Bar spacing ctr. to ctr.

Actual Stress:

$$f_s = \frac{M_w}{A_s \times j \times d}$$

Where:

Mw = Service load moment
As = Area of steel
$j = 1 - k/3$

$$k = \sqrt{2n\rho + (n\rho)^2} - n\rho$$

$n = E_s/E_c$

$\rho = A_s/(b \times d)$

b = Effective width
d = Effective depth

Distribution of flexural reinforcement does not need to be checked in concrete considered unexposed to weather.

Longitudinal distribution reinforcement:

Top of slab - use #5 bars at 15″ cts. for temperature distribution.
Bottom of slab - by design. (AASHTO Art. 3.24.10)

Negative moment reinforcement over supports:

Steel structures - add. #6 bars at 5″ between #5 bars. (AASHTO Art. 10.38.4)
P/S girder structures - by design, see Sec. 3.55.

Additional reinforcement over supports shall be a minimum of #5 bars and a maximum of #8 bars at 5″ ctrs. When necessary, replace the #5 temperature reinforcement with a larger bar to satisfy negative moment reinforcement requirement, but keep all bars within two bar sizes.

Note: See Sec. 2.4 page 12-1 for details of negative moment reinforcement.

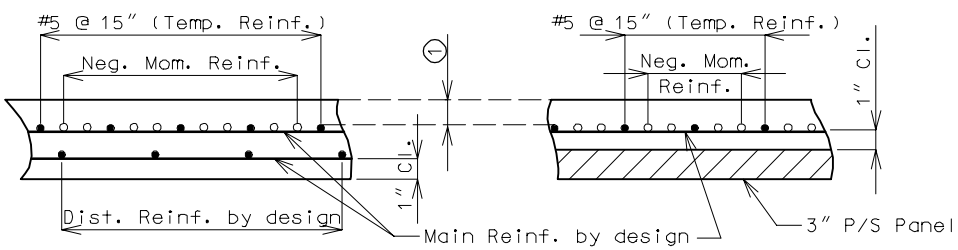

CIP SLAB P/S PANEL OPTION

① 3″ Cl. preferred min., 2-3/4″ Cl. preferred min. for P/S panels to accommodate #8 bars over supports and 2-1/2″ Cl. absolute min. by AASHTO 8.22.1.

Method of measurement:
The area of the concrete slab shall be measured and computed to the nearest square yard. This area shall be measured transversely from out to out of slab and longitudinally from end to end of bridge slab.

DESIGN CRITERIA

PRECAST PRESTRESSED PANELS

3″ Precast prestressed concrete panels with 5-1/2″ minimum cast-in-place concrete will be the standard slab used on all girder superstructures except curved steel structures. Panel details are shown on page 1.2-3 to 1.2-6 of this section.

Concrete for prestressed panels shall be Class A1 with f′c = 6,000 psi, f′ci = 3,500 psi. Prestressing tendons shall be uncoated, low-relaxation, seven-wire(7) strands for prestressed concrete conforming to AASHTO M203 Grade 270, with nominal diameter of strand = 3/8″ and area = 0.085 sq.in., minimum ultimate strength = 22.95 kips (270 ksi), and strand spacing = 4.5 inches.

Panels shall be set on joint filler in accordance with Section 1057.2.5 of Mo Std. Spec. or polystyrene bedding material. Filler thickness shall be a Min. of 3/4″ and a Max. of 2″. Standard filler width is 1-1/2″ except at splice plates where 3/4″ Min. is allowed to clear splice bolts. Joint filler thickness may be reduced to a minimum of 1/4″ over splice plates on steel structures. For prestressed girder structures, joint filler thickness may be varied within these limits to offset girder camber or at the contractor′s option a uniform 3/4″ (Min.) thickness may be used throughout. The same thickness shall be used under any one edge of any panel and the maximum change in thickness between adjacent panels shall be 1/4″.

Standard roadway cross sections and slab reinforcement for HS20 and HS20 Modified live loads are shown on page 1.4-2 to page 1.4-10 of this section. Reinforcement shown is for a cast-in-place slab or a P/S panel slab with the bottom layer of reinforcement between girders being replaced by the panels. Cantilever reinforcement details for P/S panel slab are shown on page 1.2-3 and 1.2-5 of this section.

Maximum panel width (clear span + 6″) = 9′-6″ for HS20 Modified.
Maximum panel width (clear span + 6″) = 9′-11″ for HS20.

When a safety barrier curb or median barrier curb is permanently required on the structure, other than at the edge of slab, precast prestressed panels will not be allowed in the bay underneath the curb. P/S panels are not allowed for use as simply supported for live loads, i.e. staging, where only two supports may be provided for live loads.

S.I.P.

Stay-in-place corrugated metal forms with cast-in-place concrete may be used on horizontally curved steel structures with the approval of the Structural Project Manager.

The standard slab reinforcements shown on page 1.4-2 to page 1.4-10 of this section for HS20 live load were designed using S.I.P. Dead Loads. If design is for HS20 Modified, the standard slab reinforcement needs to be checked for S.I.P. forms.

The bottom transverse reinforcement shall maintain a 1″ clear distance from the top of forms.

C.I.P.

8-1/2″ cast-in-place concrete slab with conventional forming may be used at the contractor′s option, on all girder structures. Conventional forming shall also be used between girders with stage construction joints.

DETAILS OF PRECAST PRESTRESSED PANELS
PRESTRESSED STRUCTURE

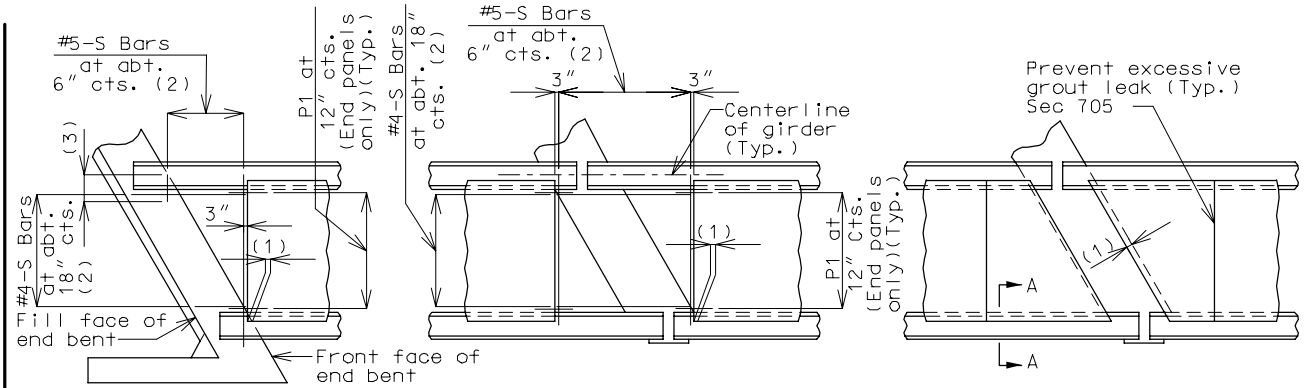

PANELS-SQUARED ENDS

PANELS-SKEWED ENDS

PLAN OF PRECAST PRESTRESSED PANELS PLACEMENT

(1) End panels shall be dimensioned 1" min. to 1-1/2" max. from the inside face of diaphragm.

(2) S-Bars shown are bottom steel in slab between panels and used with squared end panels only.

(3) Extend S-Bars 18 inches beyond the front face of end bents only.

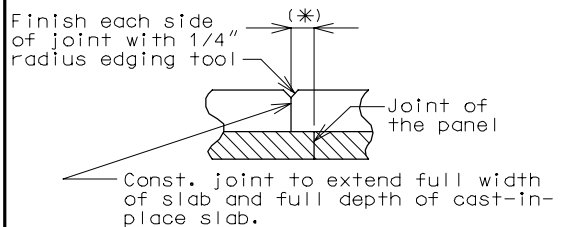

SECTION THRU CONST. JOINT

(✳) Adjust the permissible construction joint to a clearance of 6 inches minimum from the joints of the panels.

Note: All reinforcement other than prestressing strands shall be epoxy coated.

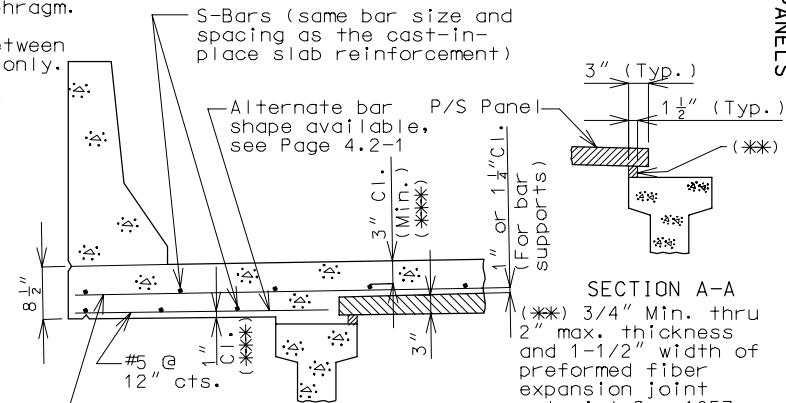

(✳✳✳) See Section 2.4 page 10-2 of this manual.

SECTION THRU CANTILEVER

SECTION A-A

(✳✳) 3/4" Min. thru 2" max. thickness and 1-1/2" width of preformed fiber expansion joint material Sec 1057 or polystyrene bedding material Sec 1073.

DETAILS OF PRECAST PRESTRESSED PANELS
STEEL STRUCTURE

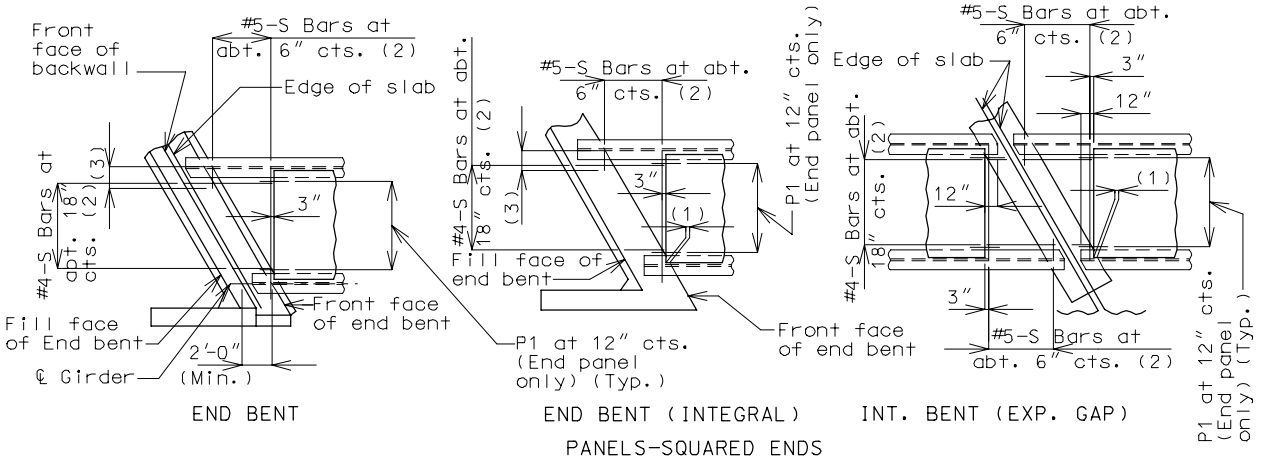

PANELS-SQUARED ENDS

(1) End panels shall be dimensioned 1" min. to 1-1/2" max. from the inside face of diaphragm.
(2) S-Bars shown are bottom steel in slab between panels and used with squared end panels only.
(3) Extend S-bars 18 inches beyond the front face of end bents only.

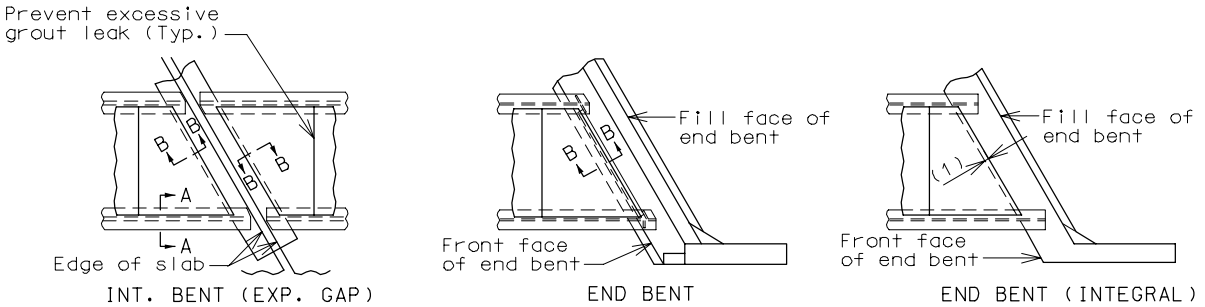

PANELS-SKEWED ENDS

Note: For details of section A-A & B-B, see Sec. 3.30 page 1.2-5.

PLAN OF PRECAST PRESTRESSED PANELS PLACEMENT

DETAILS OF PRECAST PRESTRESSED PANELS
STEEL STRUCTURE (CONT.)

Note: All reinforcement other than prestressing strands shall be epoxy coated.

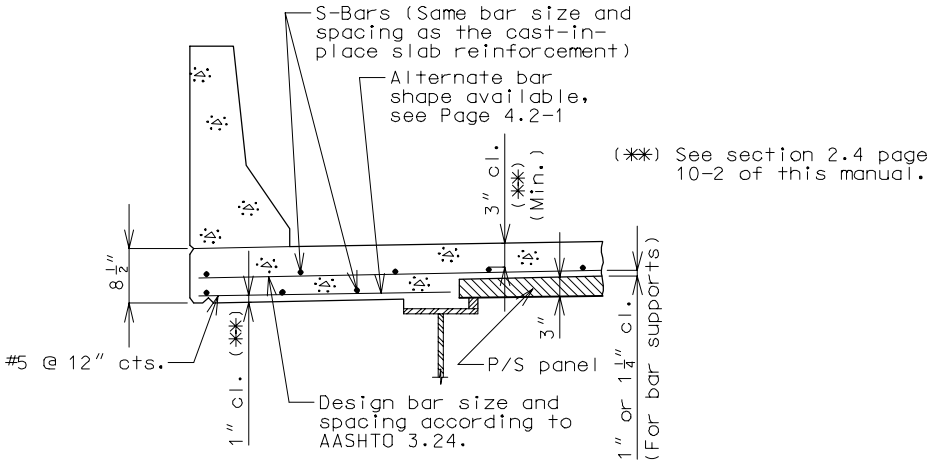

SECTION THRU CANTILEVER

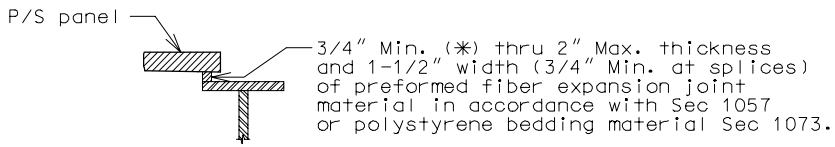

SECTION A-A

(✱) Over splice plates, Min. thickness will be 1/4".

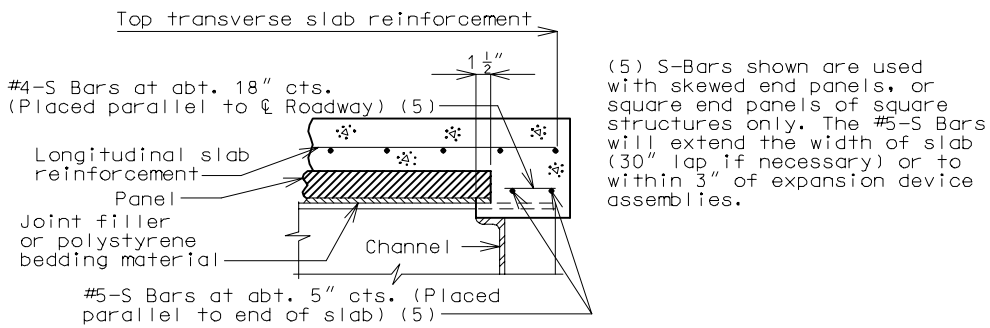

PART SECTION B-B

Note: For location of section A-A & B-B, see Sec. 3.30 Page 1.2-4.

DETAILS OF PRECAST PRESTRESSED PANELS
ALL STRUCTURES

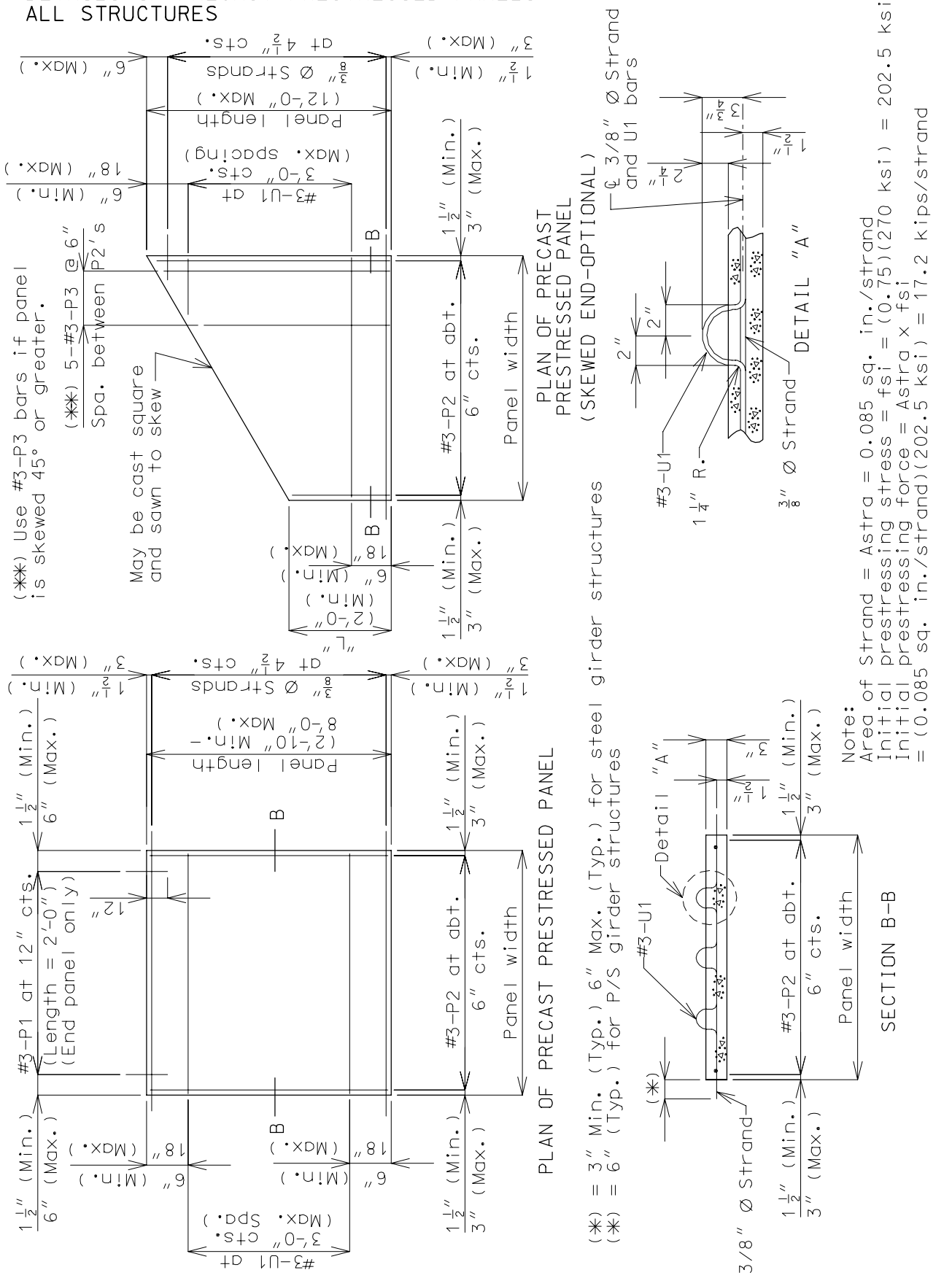

STAY-IN-PLACE FORMS (CURVED STEEL STRUCTURES ONLY)
(Use only with approval of the Structural Project Manager)

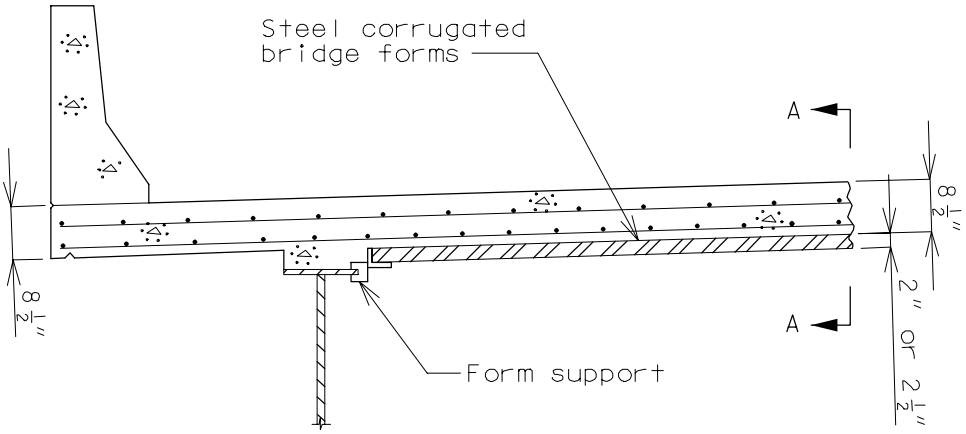

STEEL GIRDERS

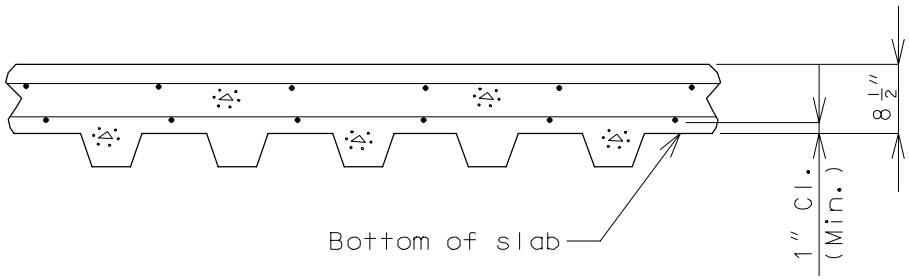

SECTION A-A

EPOXY COATED REINFORCEMENT

GENERAL

All reinforcement in the slab and above, and all reinforcement that extends into the slab, shall be epoxy coated; also, any wing reinforcement that extends into the safety barrier curb shall be epoxy coated.

NON-INTEGRAL END BENTS WITH EXPANSION DEVICES

The #6 bars in the end bent backwall above the upper construction joint shall be epoxy coated. V-bars in the backwall shall also be epoxy coated.

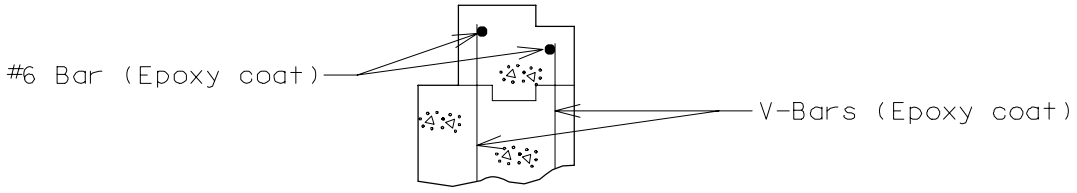

BACKWALL

STANDARD 4'-0" PARABOLIC CROWN

Use parabolic rounding for all bridges at the crown of the roadway except for the bridges with superelevated slabs. The profile grade will be at the intersection of the two cross-slopes if it is located at the crown of the roadway. (See Figure 3.30.1.3-1)

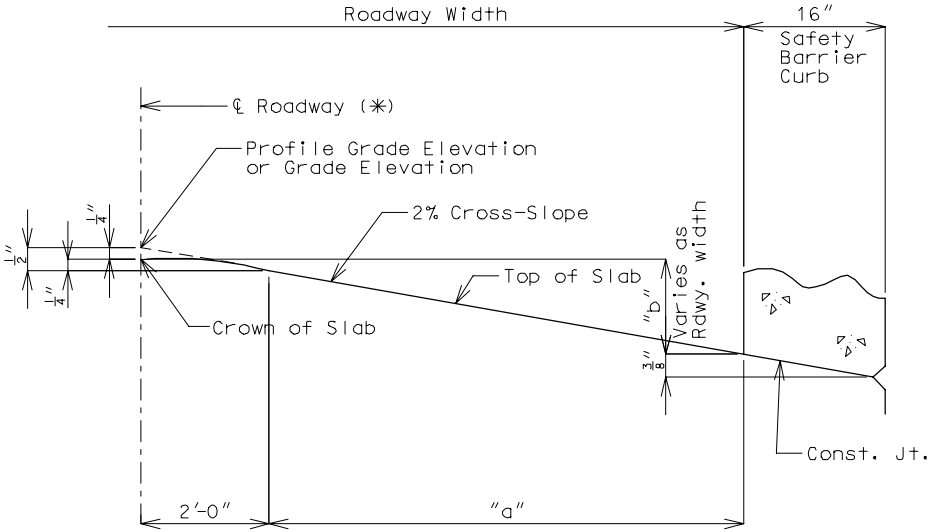

(✳) Omit when not applicable.

"b" (in inches) = "a" (in inches) x (2%) + 1/4"

Method of computing "b" (Slab on Tangent Alignment)

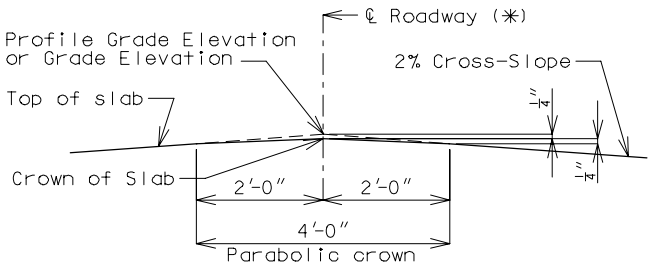

Standard Detail to Be Shown on Plans

FIGURE 3.30.1.3-1 PARABOLIC ROUNDING AT CROWN

PROFILE GRADE

See the Design Layout for location of the profile grade.

Generally, the profile grade is at the centerline of roadway for two-way traffic bridges as shown in Figure 3.30.1.3-1.

For one-way traffic bridges (as used in standard divided highways), the profile grade is at some other location away from the centerline of roadway.

Generally, the profile grade will be shown in the cross section through the superstructure on the slab sheet and in the plan view on the front sheet of the design plans.

Show stations and profile grade elevations for all bents in the plan view on the front sheet of the design plans. (See Figure 3.30.1.3-2)

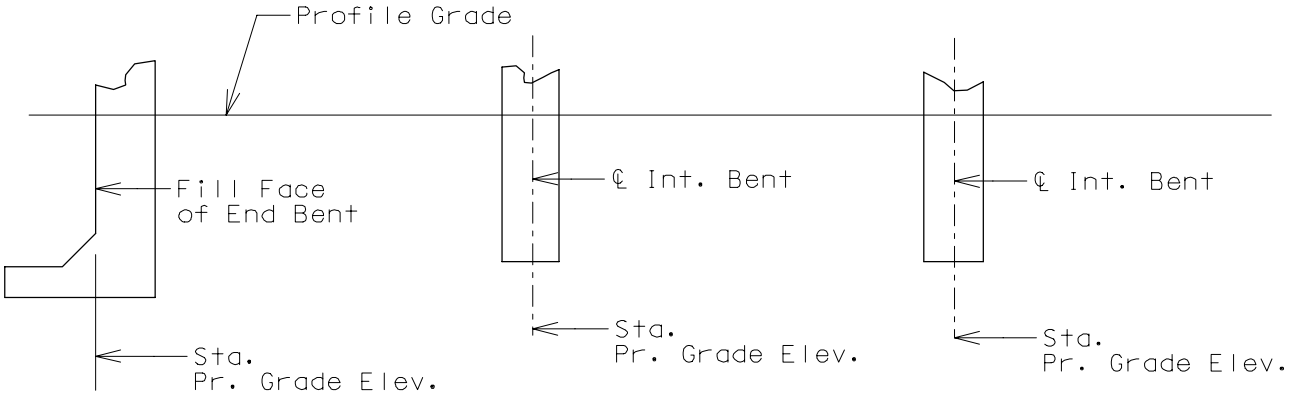

PLAN

FIGURE 3.30.1.3-2 PART OF PLAN VIEW
(SHOWING STATIONS AND PROFILE GRADE ELEVATIONS)

VERTICAL CURVE DATA

Place the vertical curve data on the front sheet near the elevation view at the vertical curve P.I. station, or as near to the vertical curve P.I. station as practical. (See Figure 3.30.1.3-3)

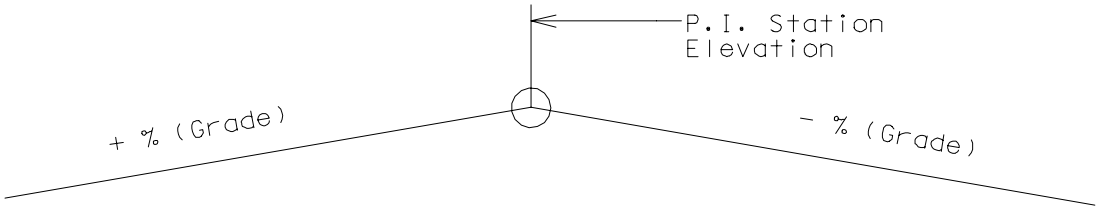

FIGURE 3.30.1.3-3 VERICAL CURVE INFORMATION

A crest vertical curve detail is shown. If the bridge is located on a sag vertical curve, then the detail for a sag vertical curve is to be used.

ELEVATIONS GENERAL

Slab elevations are used to determine haunching at the tenth points of steel and prestressed girder spans over seventy-five feet in length. Spans less than seventy-five feet in length use quarter points.

THEORETICAL BOTTOM OF SLAB ELEVATIONS AT ℄ OF GIRDER (PRIOR TO FORMING FOR SLAB)

Elevations and details for Theoretical Bottom of Slab Elevations at ℄ of girder (prior to forming for slab) shall be provided on all stringer or girder type structures.

Steel Girders

Elevations are determined by adding DL1 and DL2 deflections to finished bottom of slab elevations. DL1 deflections are reduced by the percent of dead load deflection due to the weight of structural steel. DL2 deflections are reduced by the percent of dead load deflection due to future wearing surface.

P/S I-Girders

Initial camber minus final camber is used to determine DL1 deflection.

(✱✱) Theoretical Bottom of Slab Elevations at ℄ of Girder (Prior to Forming for Slab)																
	Span 1-2 (56'-5" ℄ Brg.- ℄ Brg.)					Span 2-3 (56'-5" ℄ Brg.- ℄ Brg.)					Span 3-4 (56'-5" ℄ Brg. - ℄ Brg.)				
	℄ brg.	.25	.50	.75	℄ brg.	℄ brg.	.25	.50	.75	℄ brg.	℄ brg.	.25	.50	.75	℄ brg.
Girders No. 1 and 9	970.65	970.75	970.81	970.83	970.81	970.81	970.82	970.79	970.72	970.61	970.60	970.52	970.41	970.25	970.05
Girders No. 2 and 8	970.81	970.91	970.98	970.99	970.96	970.96	970.98	970.95	970.88	970.76	970.75	970.68	970.57	970.41	970.20
Girders No. 3 and 7	970.96	971.06	971.12	971.14	971.11	971.11	971.13	971.10	971.03	970.91	970.90	970.83	970.72	970.56	970.36
Girders No. 4 and 6	971.11	971.21	971.28	971.29	971.26	971.26	971.28	971.25	971.18	971.07	971.05	971.98	970.87	970.71	970.51
Girders No. 5	971.25	971.35	971.41	971.43	971.40	971.40	971.42	971.39	971.32	971.20	971.19	971.12	971.01	970.85	970.64

(✱✱) Elevations are based on a constant slab thickness of 8-1/2" and include allowance for theoretical dead load deflections due to weight of Slab (including Prestressed Panel) and Barrier Curb.

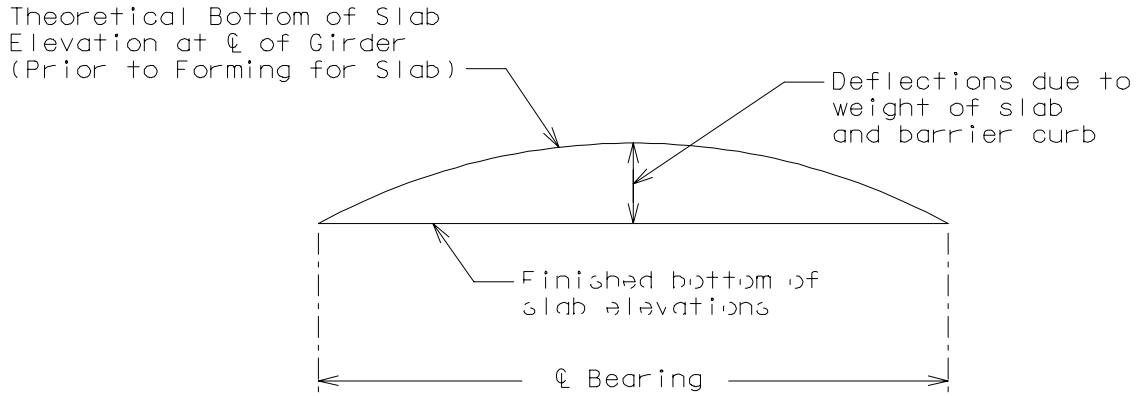

TYPICAL SLAB ELEVATIONS DIAGRAM

Example:

972.0715	Finished top of Slab Elevation @ ℄ of girder
- 0.7083	Slab Thickness
971.3632	Finished Bottom of Slab Elevation @ ℄ of girder
+ 0.0478	Theoretical Dead Load Deflection due to weight of slab and barrier curb.
971.4110	Theoretical Bottom of Slab Elevation @ ℄ Girder (Prior to Forming for Slab)
971.41	(USE) Theoretical Bottom of Slab Elevation @ ℄ Girder (Prior to Forming for Slab)

TYPICAL FOR P/S I-GIRDER DESIGN AND DETAILS
AND
SIMPLE SPAN PLATE GIRDER AND WIDE FLANGE GIRDER DESIGN AND DETAILS

(✱✱) Theoretical Bottom of Slab Elevations at ℄ of Girder (Prior to Forming for Slab)

	Span 1-2 (122'-0" ℄ Brg.-℄ Brg.)											Span 2-3 (122'-0" ℄ Brg.-℄ Brg.)									
	℄ Brg. Stiff.	.10	.20	.30	.40	.50	.60	.70	.80	.90	℄ Brg. Stiff.	.10	.20	.30	.40	.50	.60	.70	.80	.90	℄ Brg. Stiff.
Girders No. 1	829.65	829.80	829.92	830.02	830.10	830.14	830.16	830.16	830.15	830.14	830.14	830.15	830.16	830.18	830.19	830.18	830.14	830.08	829.98	829.86	829.73
Girders No. 2	829.82	829.97	830.10	830.20	830.27	830.31	830.33	830.32	830.31	830.29	830.28	830.29	830.31	830.33	830.34	830.33	830.30	830.23	830.13	830.00	829.86
Girders No. 3	829.97	830.12	830.25	830.35	830.42	830.45	830.47	830.46	830.44	830.42	830.42	830.42	830.44	830.46	830.47	830.45	830.42	830.35	830.25	830.12	829.97
Girders No. 4	829.86	830.00	830.13	830.23	830.30	830.33	830.34	830.33	830.31	830.29	830.28	830.29	830.31	830.32	830.33	830.31	830.27	830.20	830.10	829.97	829.82
Girders No. 5	829.73	829.86	829.98	830.08	830.14	830.18	830.19	830.18	830.16	830.15	830.14	830.14	830.15	830.16	830.16	830.14	830.10	830.02	829.92	829.80	829.65

(✱✱) Elevations are based on a constant slab thickness of $8\frac{1}{2}''$ and include allowance for theoretical dead load deflections due to weight of Slab (including Prestressed Panel) and Barrier Curb.

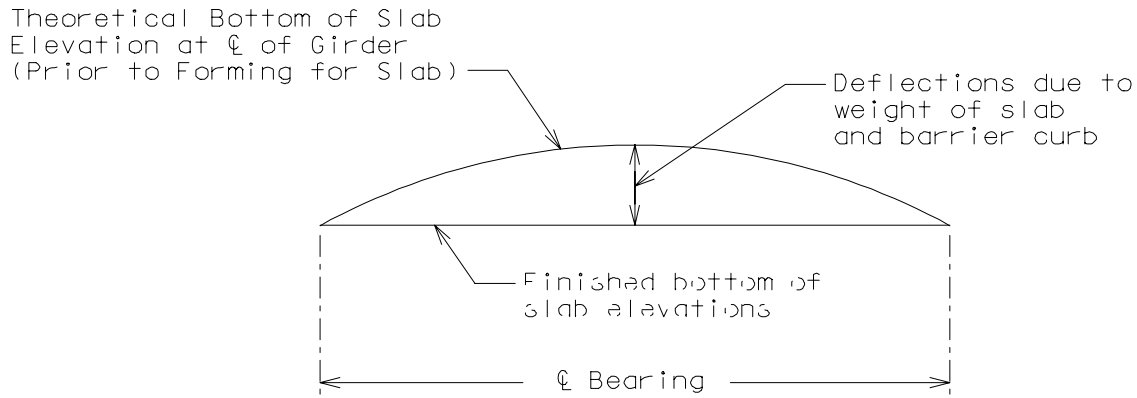

TYPICAL SLAB ELEVATIONS DIAGRAM

Example:

830.7504	Finished top of Slab Elevation @ ℄ of girder
− 0.7083	Slab Thickness
830.0421	Finished Bottom of Slab Elevation @ ℄ of girder
+ 0.1348	Theoretical Dead Load Deflection due to weight of slab and barrier curb.
830.1769	Theoretical Bottom of Slab Elevation @ ℄ Girder (Prior to Forming for Slab)
830.18	(USE) Theoretical Bottom of Slab Elevation @ ℄ Girder (Prior to Forming for Slab)

TYPICAL FOR PLATE GIRDER AND WIDE FLANGE DESIGN AND DETAILS

(Continuous Spans)

GENERAL INFORMATION:

(A) Although P/S panel slabs are the standard, C.I.P. cross sections are shown for information.

(B) This slab design includes an allowance for 35 PSF future wearing surface.

(C) Slab design is based on ultimate strength and grade 60 reinforcing steel.

(D) See this bridge manual section for dead load to stringers or girders.

(F) Haunching diagrams shall be provided for only the P/S panel slab.

(G) Quantities for haunching are estimated by taking 4% of slab quantities for steel structures and 2% for prestressed structures.

(H) The span lengths for steel and prestressed structures as given in the design layout are horizontal dimensions and the actual girder length should be adjusted according to grade.

(I) When the flange width exceeds the bottom longitudinal reinforcement spacing over the girder, reduce the bar spacing between the girders and increase the bar spacing over the girder to clear the flange edges.

(J) When the structure is on grade, determine lengths of the longitudinal reinforcement in slab and safety barrier curb from the actual length.

(K) For slab design, the centerline of wheels is located 1 foot from face of curbs.

(L) The standard slabs were designed assuming 10″ minimum flanges.

(M) When median barrier curb or safety barrier curb is permanently required on the structure, other than at the edge of slab, P/S panels will not be allowed in the bay underneath the curb. Check reinforcement in the C.I.P. bay for collision and wheel loads on opposite faces of the curb and provide suitable anchorage of the reinforcing steel.

(N) The bridge roadway width, from gutter line to gutter line, shall be the same as the roadbed width (from outside edge of shoulder to outside edge of shoulder).

(O) The P/S panels must be used in at least two consecutive bays.

Note: Generally, when the deck is bid in Sq. Yd., curbs are bid in linear Ft., and when the deck is bid in Cu. Yd., curbs are bid in Cu. Yd.

DETAILS OF CONCRETE SLABS FOR STRUCTURES (CONT.) Concrete Slab

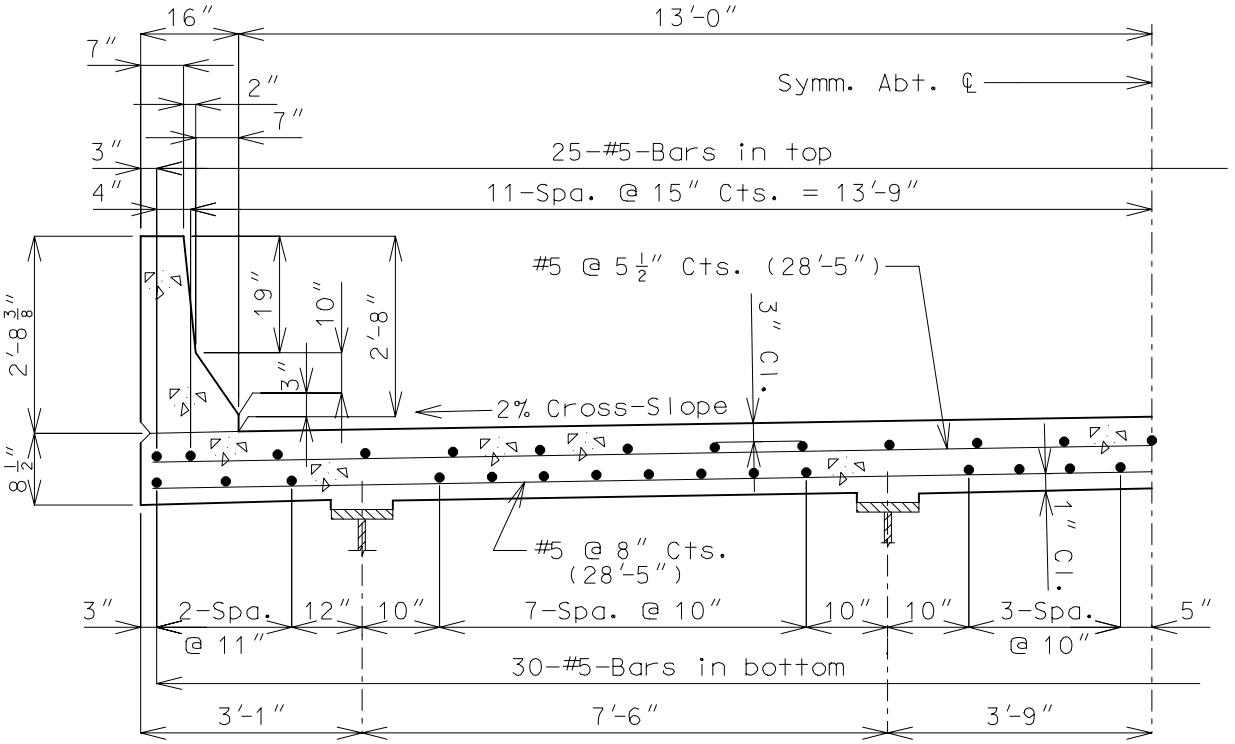

HS20 (26′-0″ ROADWAY - 4 GIRDER)

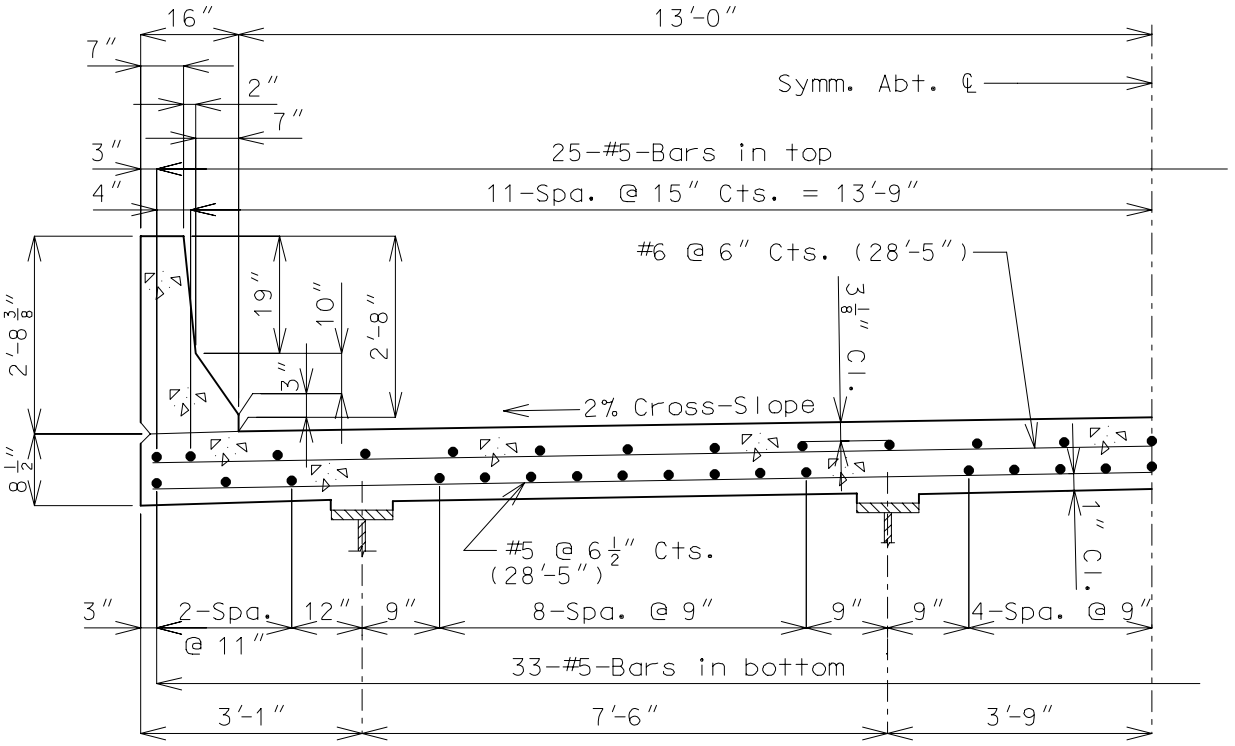

HS20 MODIFIED (26′-0″ ROADWAY - 4 GIRDER)

NOTE: SEE PAGE 1.4-1 OF SECTION 3.30 FOR NOTES.

DETAILS OF CONCRETE SLABS FOR STRUCTURES (CONT.) Concrete Slab

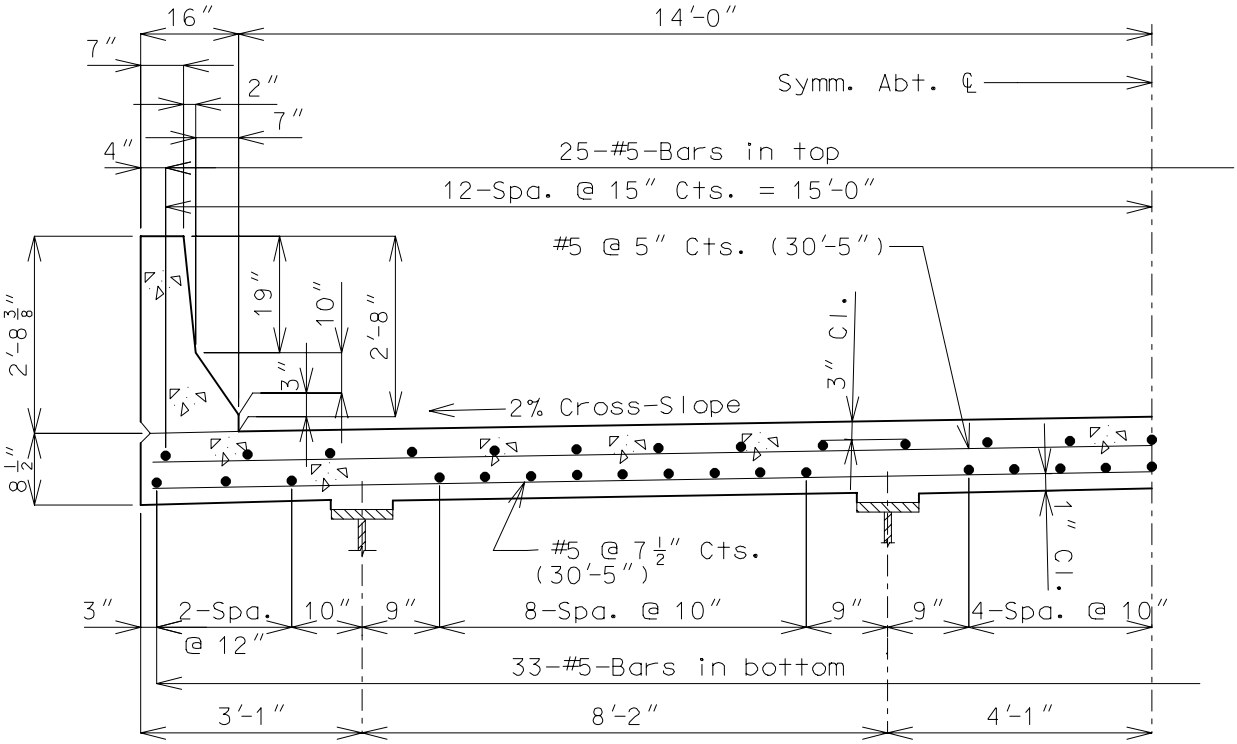

HS20 (28′-0″ ROADWAY - 4 GIRDER)

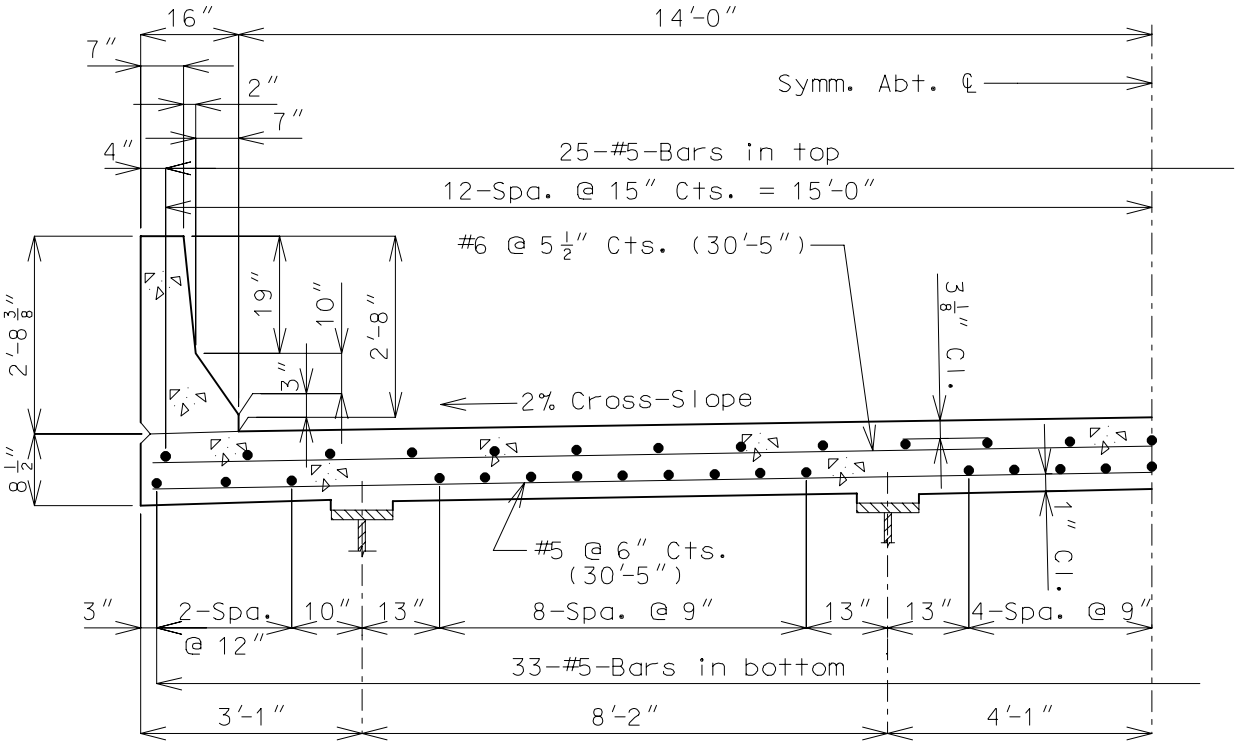

HS20 MODIFIED (28′-0″ ROADWAY - 4 GIRDER)

NOTE: SEE PAGE 1.4-1 OF SECTION 3.30 FOR NOTES.

DETAILS OF CONCRETE SLABS FOR STRUCTURES (CONT.) Concrete Slab

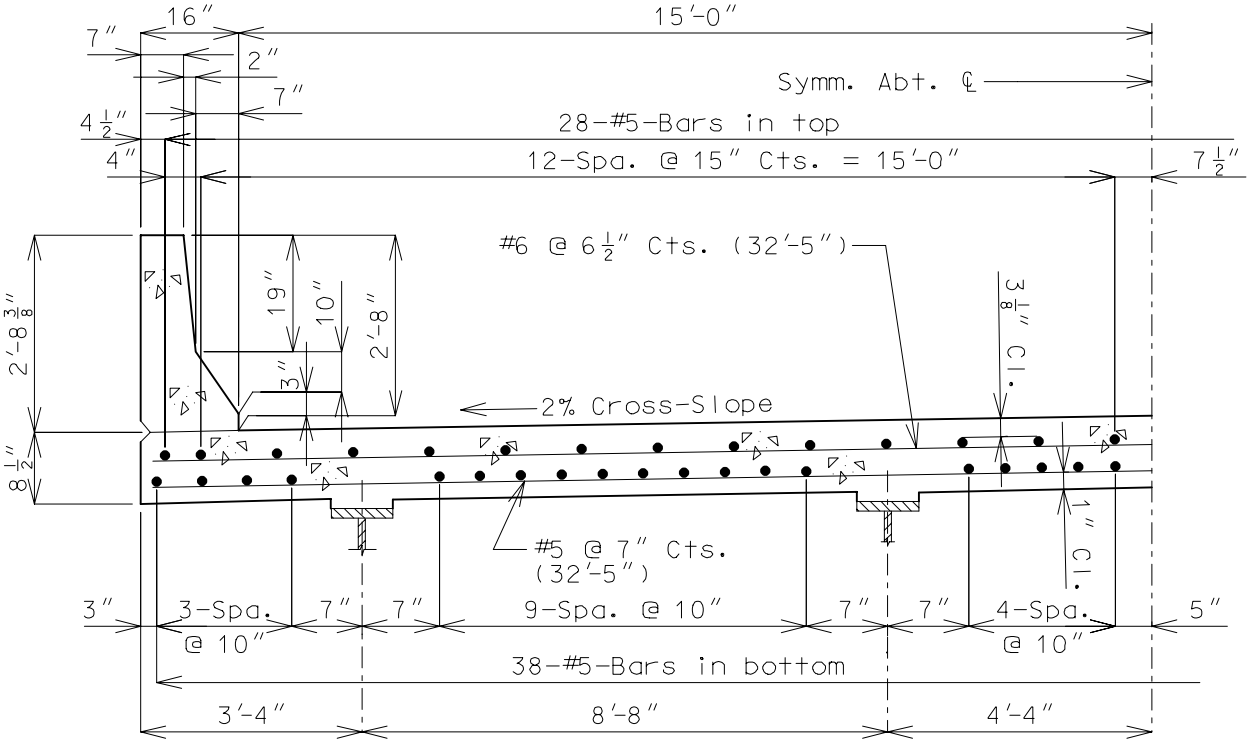

HS20 (30′-0″ ROADWAY - 4 GIRDER)

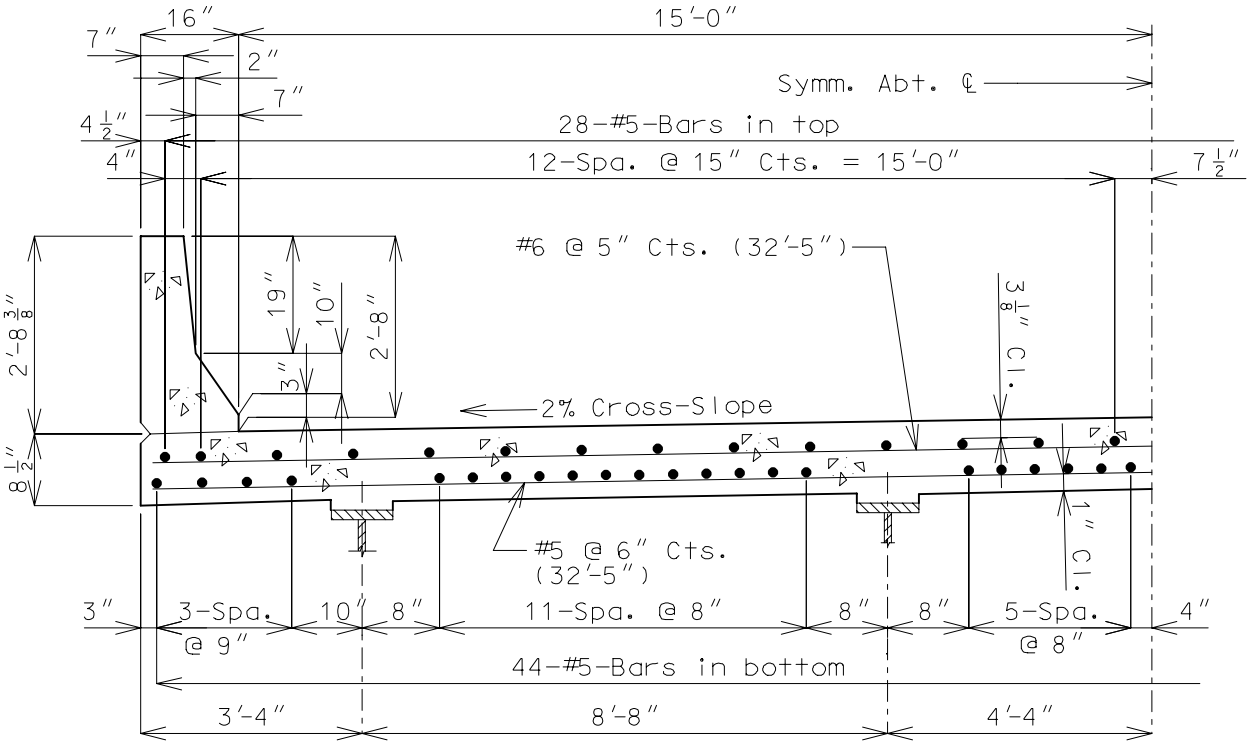

HS20 MODIFIED (30′-0″ ROADWAY - 4 GIRDER)

NOTE: SEE PAGE 1.4-1 OF SECTION 3.30 FOR NOTES.

DETAILS OF CONCRETE SLABS FOR STRUCTURES (CONT.) Concrete Slab

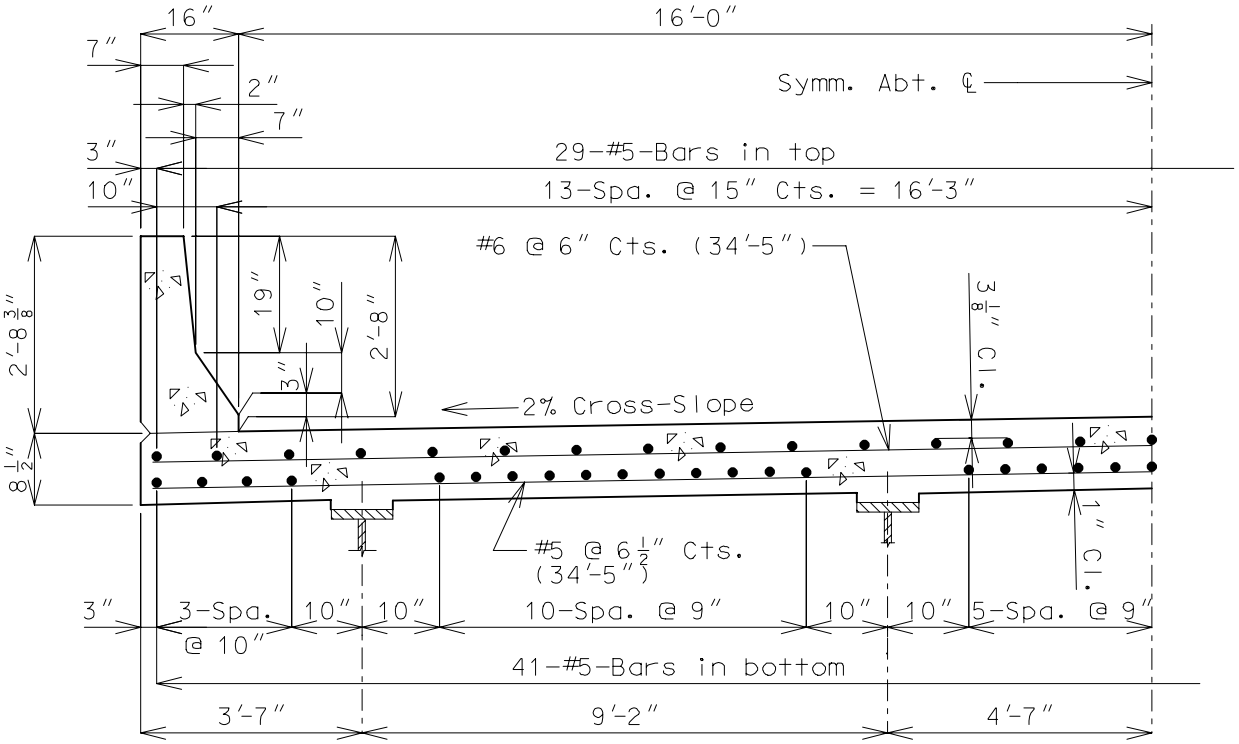

HS20 (32′-0″ ROADWAY - 4 GIRDER)

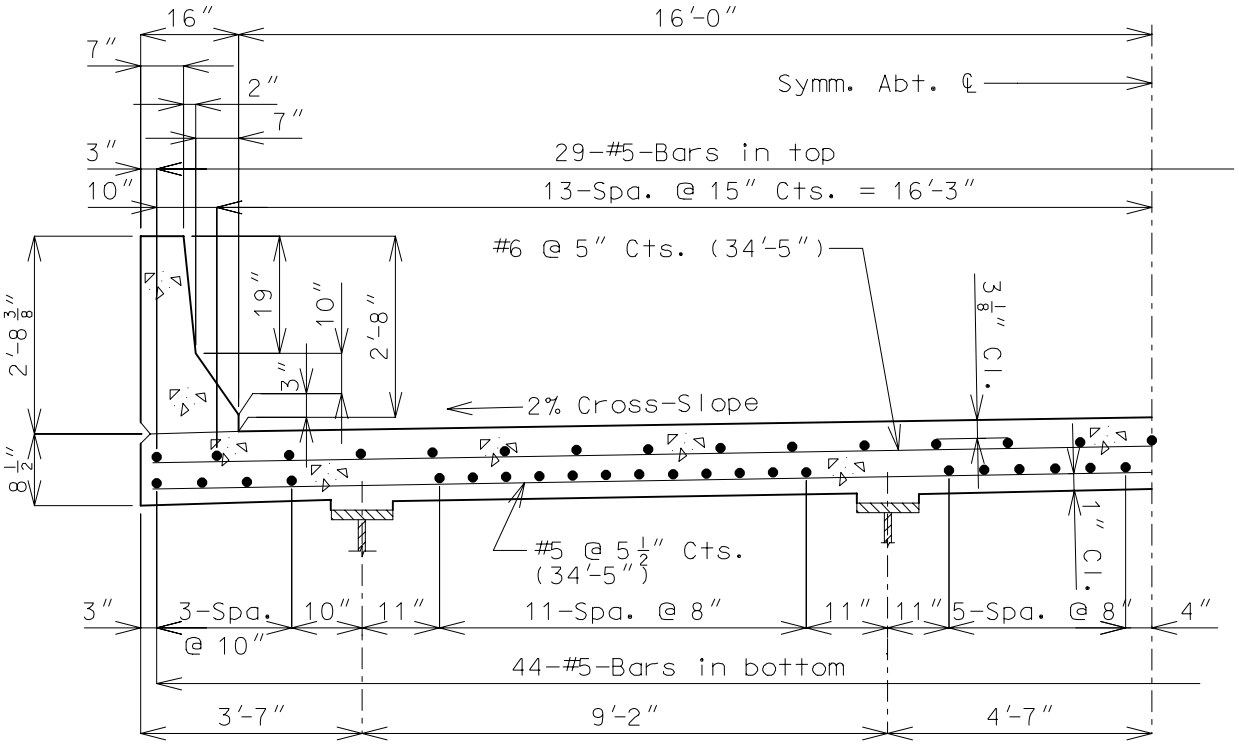

HS20 MODIFIED (32′-0″ ROADWAY - 4 GIRDER)

NOTE: SEE PAGE 1.4-1 OF SECTION 3.30 FOR NOTES.

DETAILS OF CONCRETE SLABS FOR STRUCTURES (CONT.) Concrete Slab

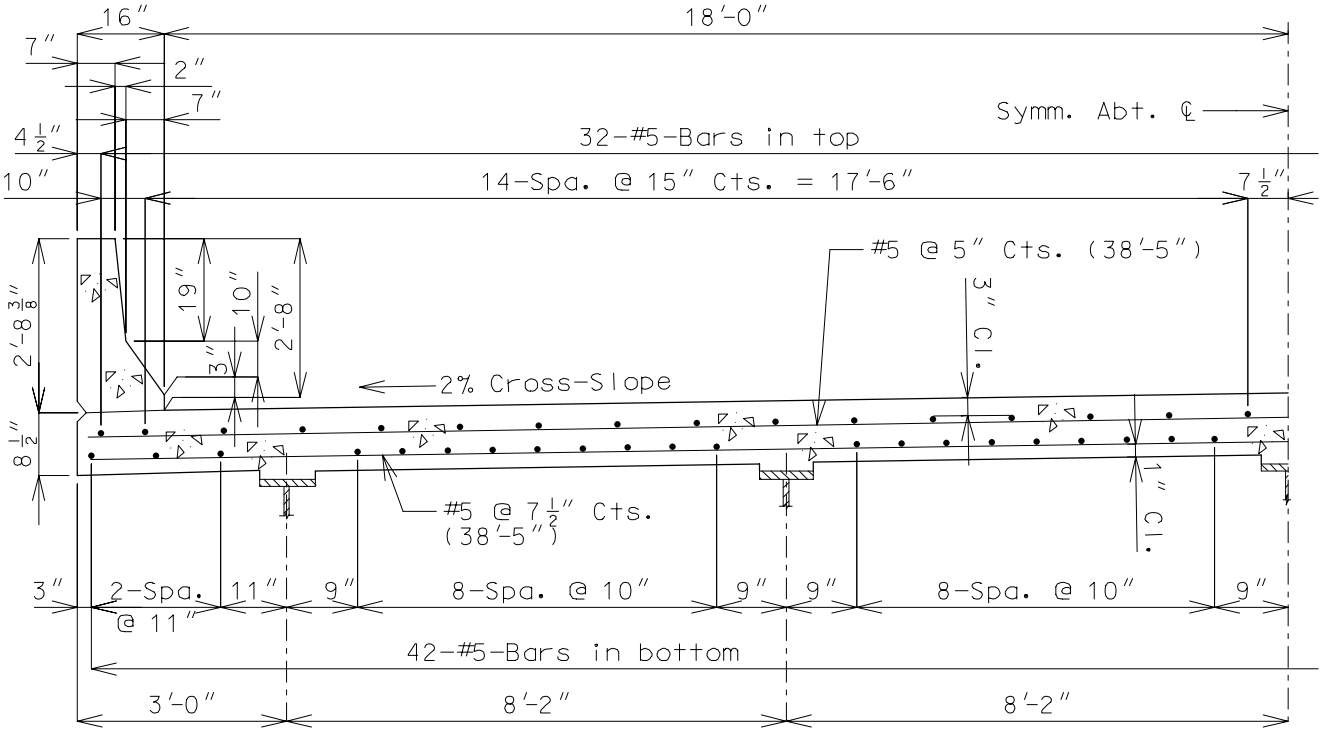

HS20 (36′-0″ ROADWAY - 5 GIRDER)

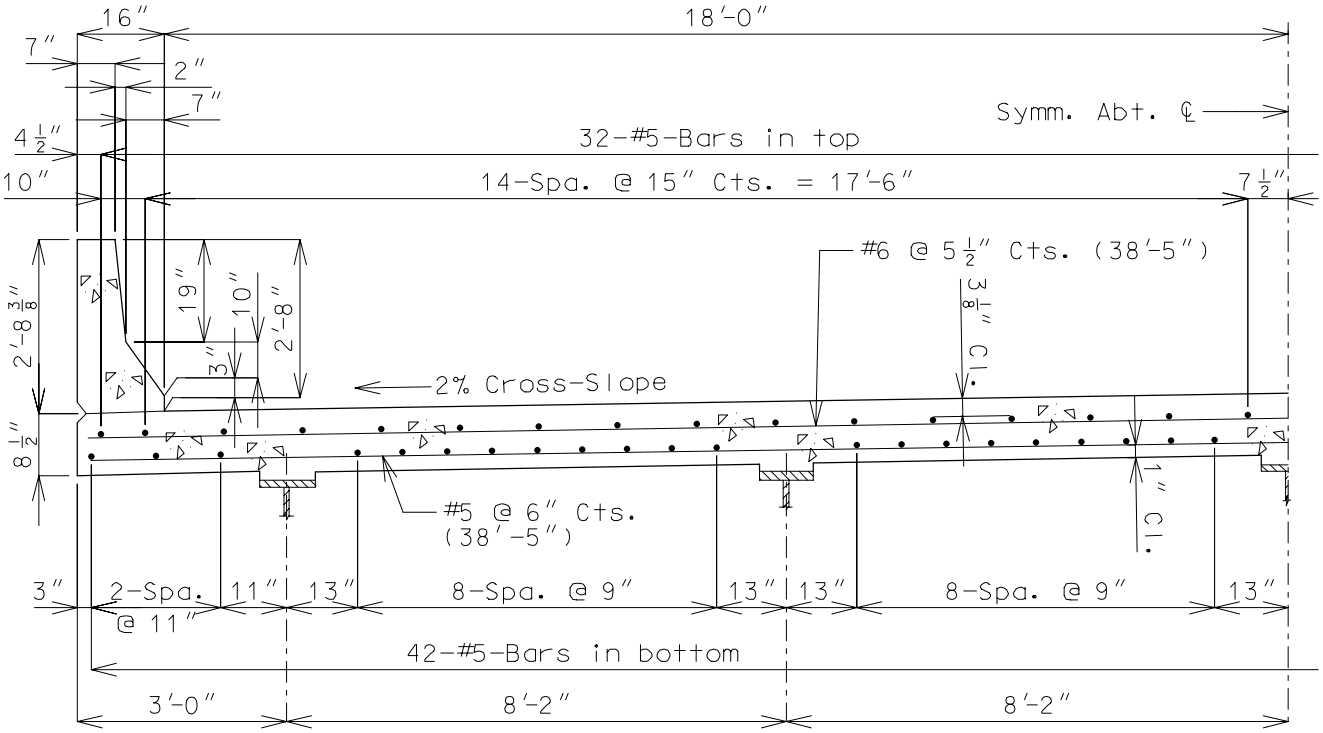

HS20 MODIFIED (36′-0″ ROADWAY - 5 GIRDER)

NOTE: SEE PAGE 1.4-1 OF SECTION 3.30 FOR NOTES.

DETAILS OF CONCRETE SLABS FOR STRUCTURES (CONT.) Concrete Slab

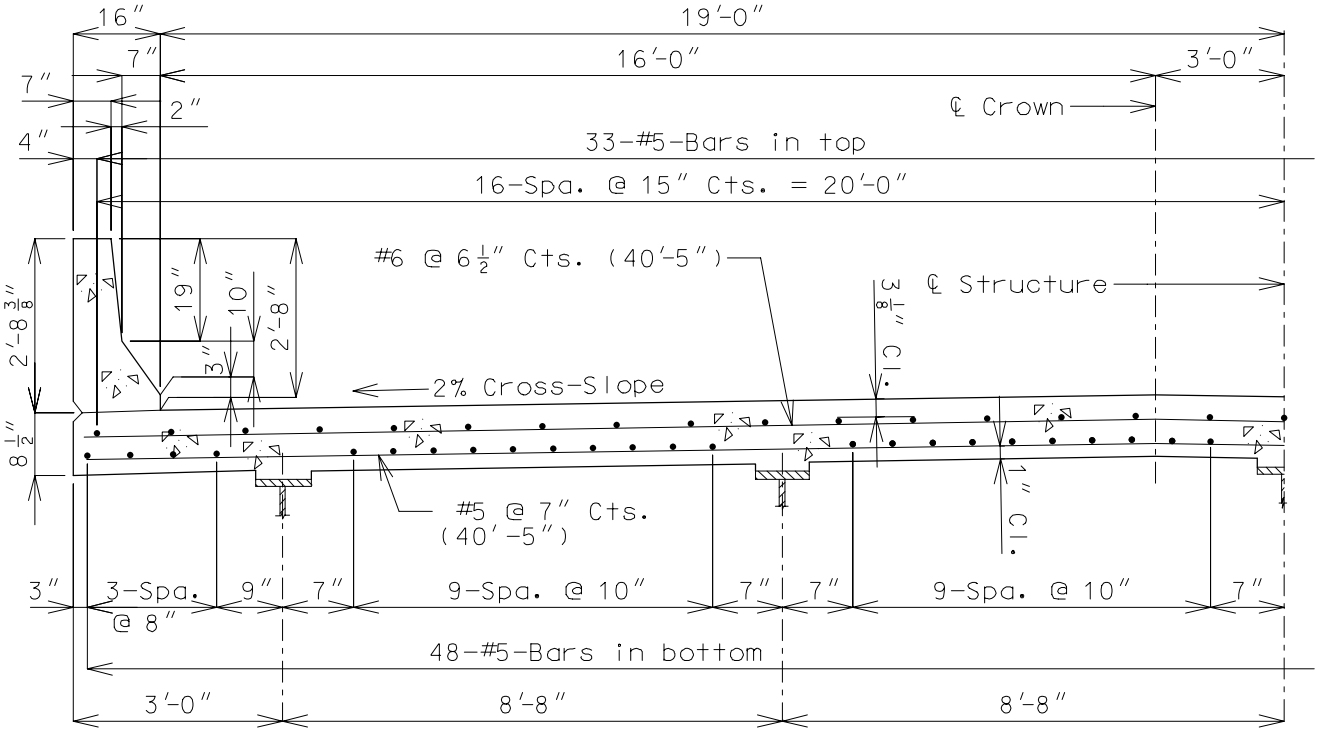

HS20 (38′-0″ ROADWAY - 5 GIRDER) (UNSYMMETRICAL)

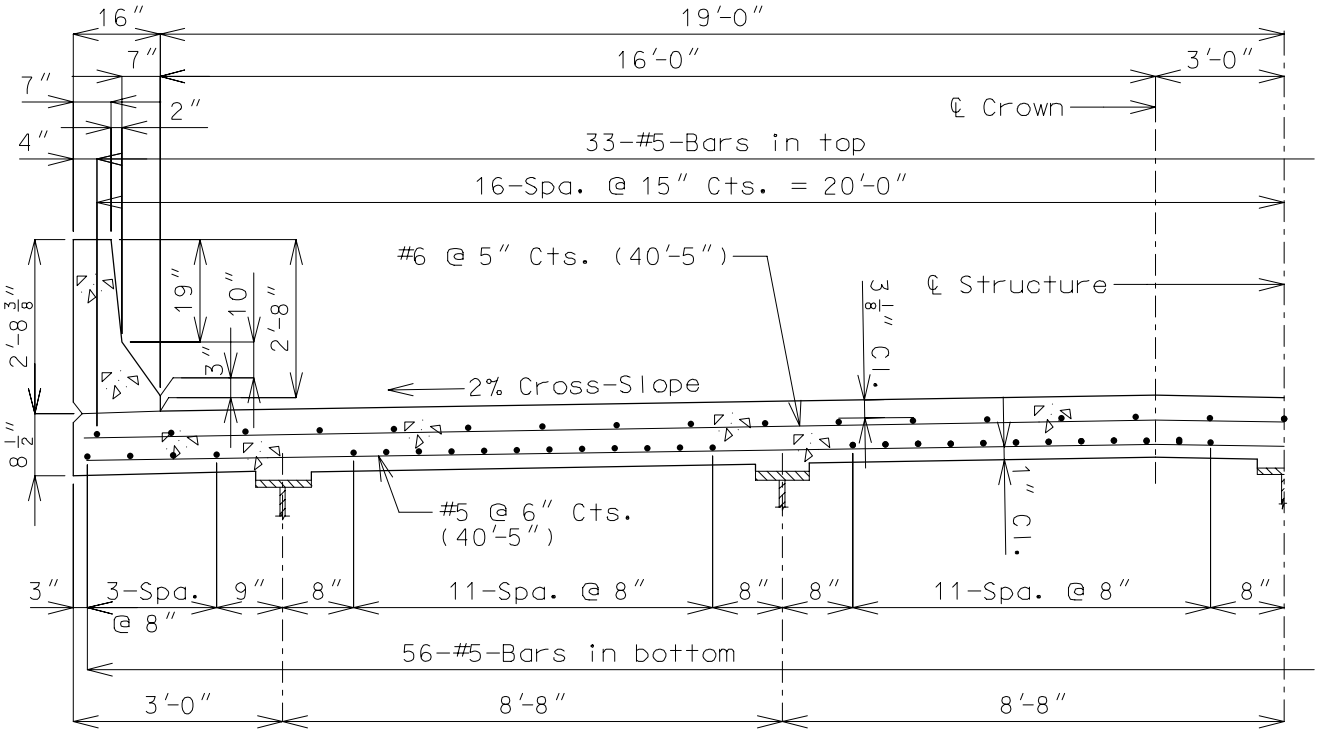

HS20 MODIFIED (38′-0″ ROADWAY - 5 GIRDER) (UNSYMMETRICAL)

NOTE: SEE PAGE 1.4-1 OF SECTION 3.30 FOR NOTES.

DETAILS OF CONCRETE SLABS FOR STRUCTURES (CONT.) Concrete Slab

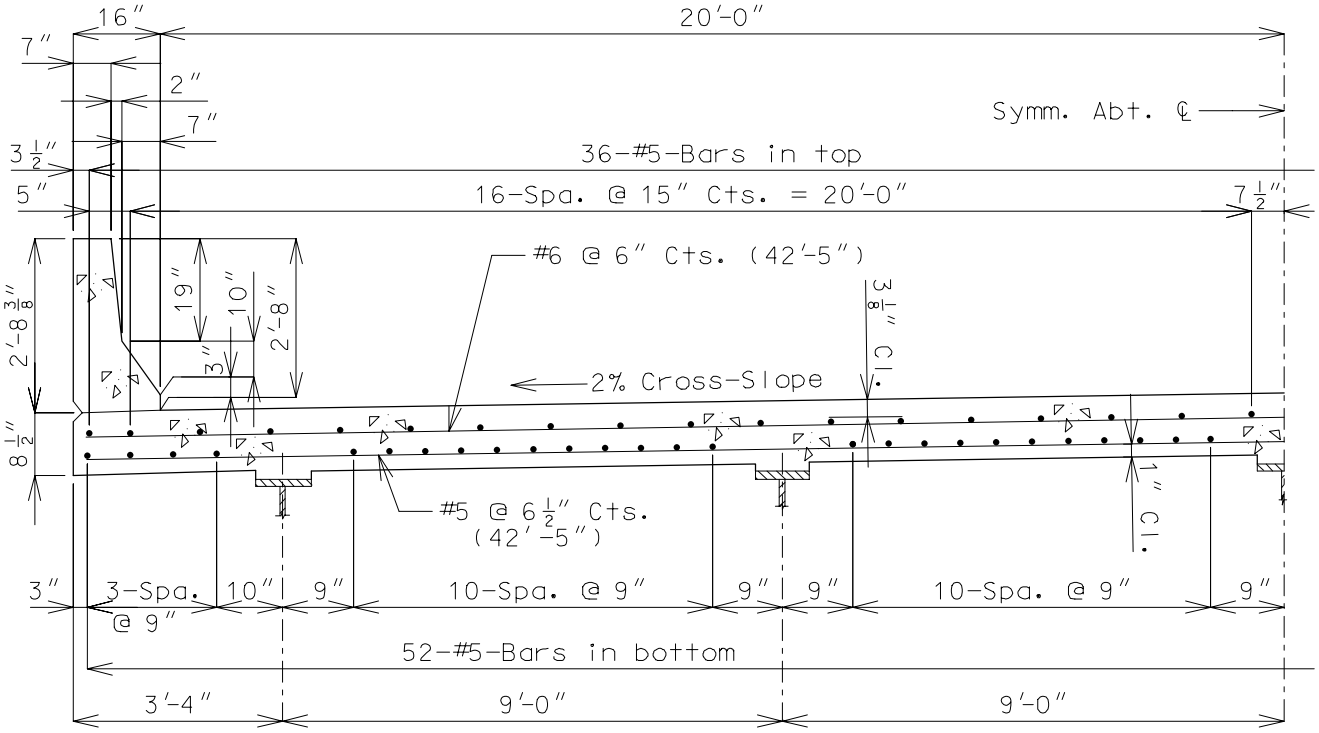

HS20 (40′-0″ ROADWAY - 5 GIRDER)

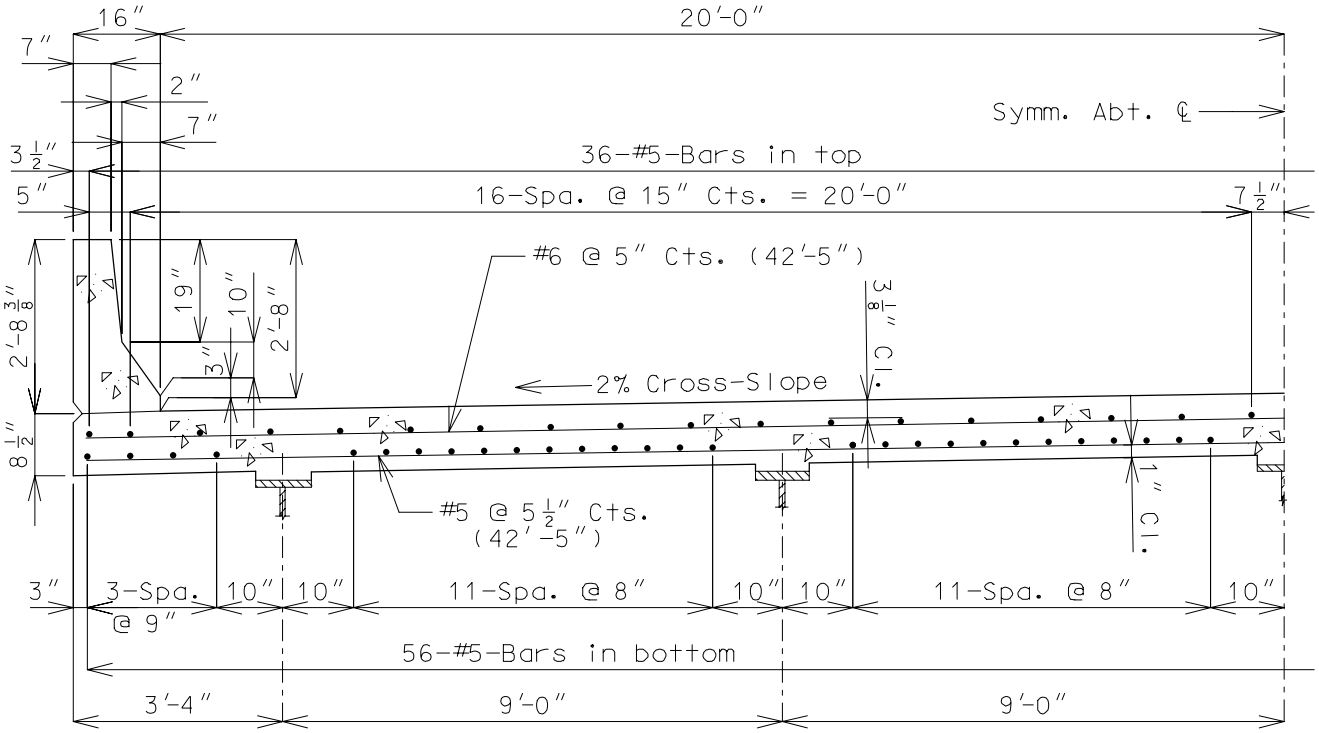

HS20 MODIFIED (40′-0″ ROADWAY - 5 GIRDER)

NOTE: SEE PAGE 1.4-1 OF SECTION 3.30 FOR NOTES.

DETAILS OF CONCRETE SLABS FOR STRUCTURES (CONT.) Concrete Slab

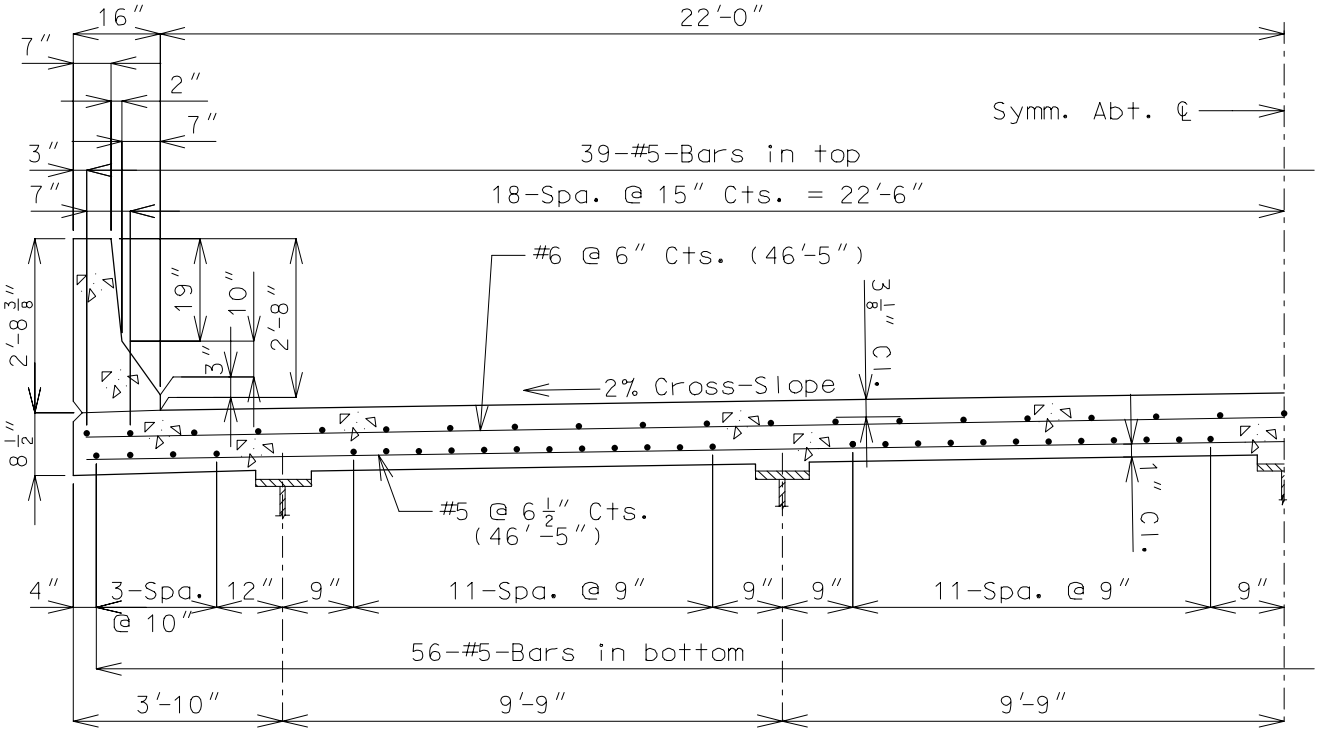

HS20 (44′-0″ ROADWAY - 5 GIRDER)

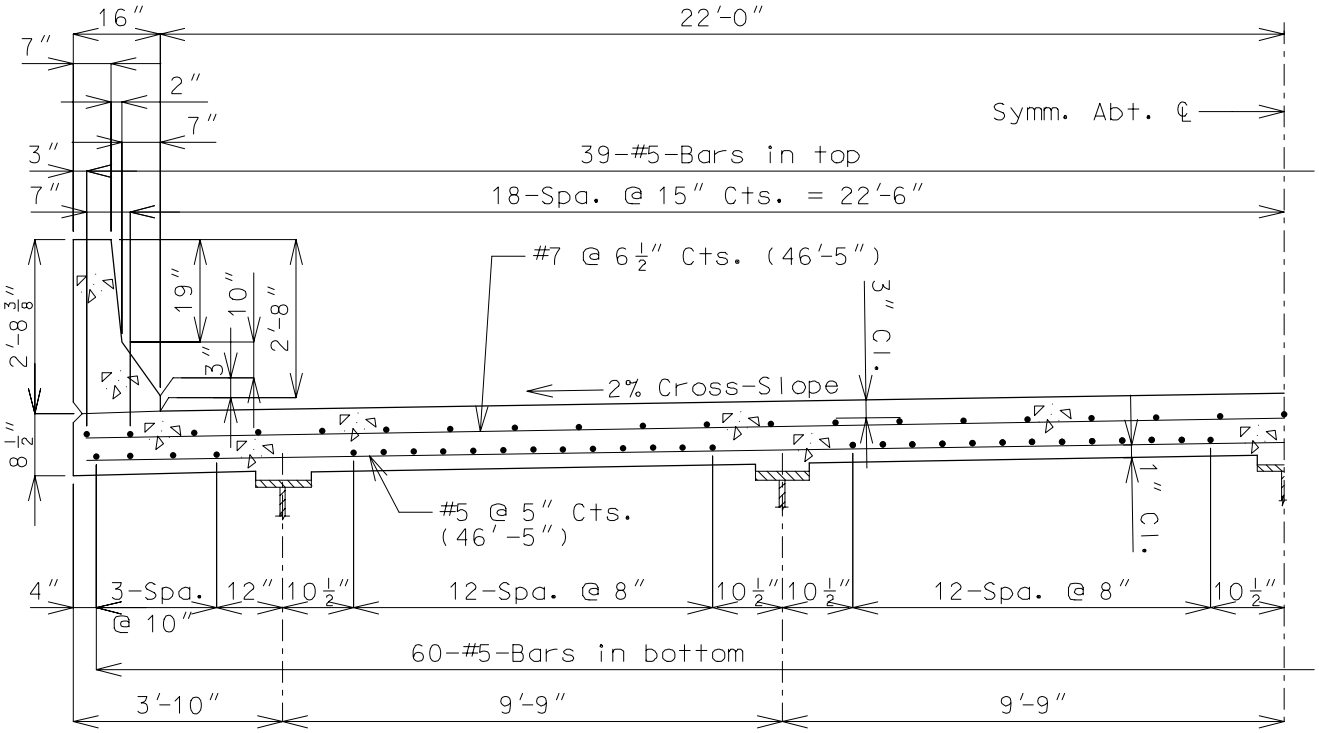

HS20 MODIFIED (44′-0″ ROADWAY - 5 GIRDER)

NOTE: SEE PAGE 1.4-1 OF SECTION 3.30 FOR NOTES.

RESISTING MOMENTS

Based on
fy = 60,000 psi
f'c = 4,000 psi
n = 8

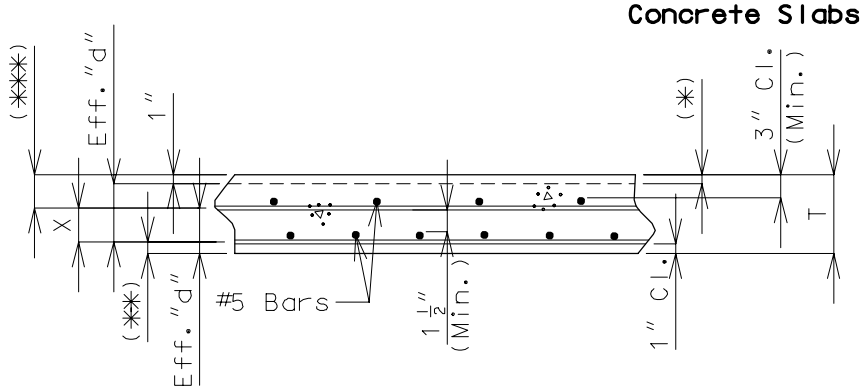

(✱) For slabs without Asphaltic Concrete Protective Wearing Surface neglect 1" Monolithic Concrete Wearing Surface.

(✱✱) 1-5/16" for #5
1-3/8" for #6

(✱✱✱) 3-15/16" for #5
4-1/8" for #6

Ultimate Strength Design, Ø = 0.90 (Top Reinforcement)

NEGATIVE MOMENT REINFORCEMENT:					
T	Eff. "d"	X	Reinforcement	As(in²/ft.)	ØMn (lbs.-ft.)
8 1/2"	4 9/16"	3 1/4"	#5 @ 7"	0.526	9884
8 1/2"	4 9/16"	3 1/4"	#5 @ 6 1/2"	0.566	10561
8 1/2"	4 9/16"	3 1/4"	#5 @ 6"	0.614	11359
8 1/2"	4 9/16"	3 1/4"	#5 @ 5 1/2"	0.669	12255
8 1/2"	4 9/16"	3 1/4"	#5 @ 5"	0.739	13319
8 1/2"	4 3/8"	3"	#6 @ 7"	0.757	13009
8 1/2"	4 3/8"	3"	#6 @ 6 1/2"	0.816	13862
8 1/2"	4 3/8"	3"	#6 @ 6"	0.884	14818
8 1/2"	4 3/8"	3"	#6 @ 5 1/2"	0.964	15904
8 1/2"	4 3/8"	3"	#6 @ 5"	1.060	17151

RESISTING MOMENTS (CONT.)

Ultimate Strength Design, Ø = 0.90 (Top Reinforcement)

POSITIVE MOMENT REINFORCEMENT:					
T	Eff. "d"	X	Reinforcement	As(in^2/ft.)	ØMn (lbs.-ft.)
$8\frac{1}{2}''$	$6\frac{3}{16}''$	$3\frac{1}{4}''$	#5 @ 9"	0.409	10835
$8\frac{1}{2}''$	$6\frac{3}{16}''$	$3\frac{1}{4}''$	#5 @ $8\frac{1}{2}''$	0.433	11436
$8\frac{1}{2}''$	$6\frac{3}{16}''$	$3\frac{1}{4}''$	#5 @ 8"	0.460	12108
$8\frac{1}{2}''$	$6\frac{3}{16}''$	$3\frac{1}{4}''$	#5 @ $7\frac{1}{2}''$	0.491	12874
$8\frac{1}{2}''$	$6\frac{3}{16}''$	$3\frac{1}{4}''$	#5 @ 7"	0.526	13730
$8\frac{1}{2}''$	$6\frac{3}{16}''$	$3\frac{1}{4}''$	#5 @ $6\frac{1}{2}''$	0.566	14700
$8\frac{1}{2}''$	$6\frac{3}{16}''$	$3\frac{1}{4}''$	#5 @ 6"	0.614	15849
$8\frac{1}{2}''$	$6\frac{3}{16}''$	$3\frac{1}{4}''$	#5 @ $5\frac{1}{2}''$	0.669	17147
$8\frac{1}{2}''$	$6\frac{3}{16}''$	$3\frac{1}{4}''$	#5 @ 5"	0.739	18701
$8\frac{1}{2}''$	$6\frac{1}{8}''$	3"	#6 @ 9"	0.589	15087
$8\frac{1}{2}''$	$6\frac{1}{8}''$	3"	#6 @ $8\frac{1}{2}''$	0.624	15911
$8\frac{1}{2}''$	$6\frac{1}{8}''$	3"	#6 @ 8"	0.663	16820
$8\frac{1}{2}''$	$6\frac{1}{8}''$	3"	#6 @ $7\frac{1}{2}''$	0.707	17833
$8\frac{1}{2}''$	$6\frac{1}{8}''$	3"	#6 @ 7"	0.757	18969

POURING AND FINISHING CONCRETE ROADWAY SLABS **Concrete Slabs**

Concrete pouring and finishing with/without rates are based on the following:

One pouring sequence must be provided that will permit a minimum pouring rate of 25 cubic yards per hour without retarder for steel structures and with retarder for prestressed structures. A minimum finishing rate of 20 linear feet per hour is also required. If these two requirements conflict, see the Structural Project Manager.

Continuous steel structures will normally require a case I pouring sequence with the basic sequence being a skip pour arrangement. Minimum yardage for the basic sequence shall not be less than 25 cubic yards per hour. Computation of minimum yardage for alternate pours is outlined below. If the rate for the alternate pours should be 25 yards or less, the skip pour basic sequence may be eliminated with the first alternate pour becoming the basic sequence.

Use of retarder is required for prestressed structures and a case II sequence ✳ is normally required. The minimum rate of pour will be determined by the 20 feet per hour minimum finishing rate but shall not be less than 25 cubic yards per hour. For span lengths over 80′ or special structures (segmental, etc.), see Structural Project Manager.

W = Slab width (out to out of curbs, or width being poured)(ft.)
T = $8\frac{1}{2}$″ (slab thickness)
V = Volume of concrete (cu. yds./hr.)
L (two span) = Length of longest alternate "A" pour (ft.)
L (more than two span) = Length of longest span (ft.)

✳ Case II sequence is used for all prestressed structures, except if slab area of one span is greater than 3,000 sq. ft., use case I.

Minimum rate of pour/hour for alternate pours (reduce V by 25% for P/C P/S Panels).

Without Retarder:

$V = (\frac{L \times W \times T}{27}).5$ Not less than 25 yds.^{3}/hr.

With Retarder:

$V = (\frac{L \times W \times T}{27}).3$ Not less than 25 yds.^{3}/hr.

Simple Span:

$V = (\frac{20' \times W \times T}{27})$ Not less than 25 yds.^{3}/hr.

Extra long span or extra wide bridges that indicate a basic rate greater than 25 yds.^{3}/hr. are to be checked with the Structural Project Manager.

The minimum rate of pour for solid slab or voided slabs is 20 linear feet of bridge per hour and not less than 25 cu. yds. per hour. Check pouring rates with Structural Project Manager if it is indicated necessary to exceed the basic minimum rate of 25 cu. yds. per hour.

The largest minimum rate of pour for alternate pours is 50 cu. yds. per hour in rural areas or 65 cu. yds. per hour in urban areas.

Notes See Section 4 H6.

SLAB POURING SEQUENCE TRANSVERSE CONSTRUCTION JOINTS

Slab Pouring Sequence - Bridges on Grade

All bridges on straight grades shall be poured up grade.

All bridges on vertical curves may be poured either up our down grade.

Transverse Construction Joint

On occasion, it will be necessary to off-set the transverse construction joint. For example, on bridges with large skews, wide roadways or short spans, the transverse construction joint could extend across the intermediate bent. Should this occur, the off-set or sawtooth construction joint shall be used.

It is desirable to relocate const. joint within reason (6″±) should it cross additional negative slab reinforcement (see page 1.6-4). However, this shall not be considered critical.

Since the off-set construction joint creates construction problems, the designer shall avoid its use, if possible. Consult the Structural Project Manager for possible variations. See illustrations below for clarification.

Situation I: Square structures and small skew.
Joint normal to Bridge Centerline (Square) or Square Joint.

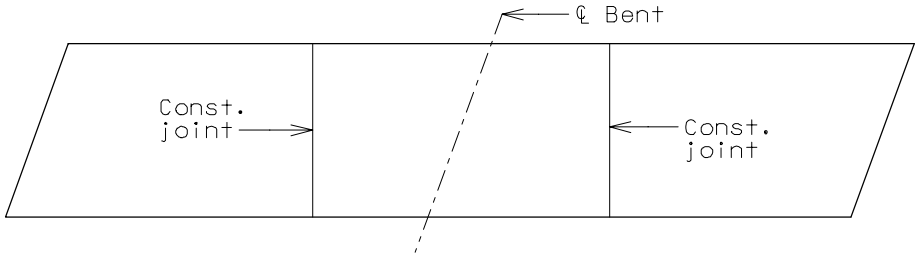

Situation II: Large skew (> 45°), wide roadways, short spans
Joint Parallel to skew (skewed) or skewed joints.

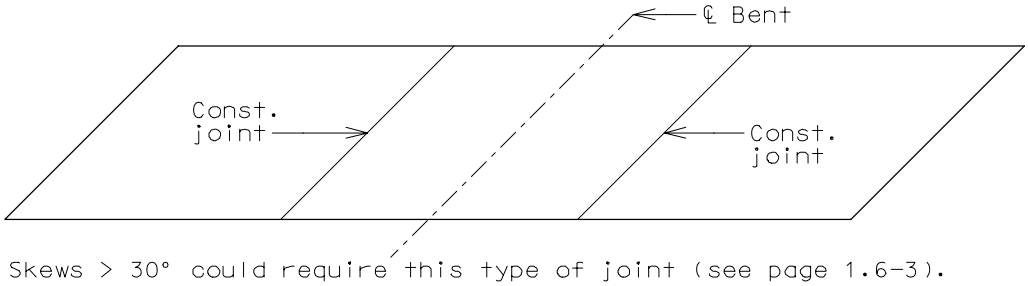

Note: Skews > 30° could require this type of joint (see page 1.6-3).

Situation III: Small skew when number of sawtooth is not excessive (off-set or sawtooth joint.)

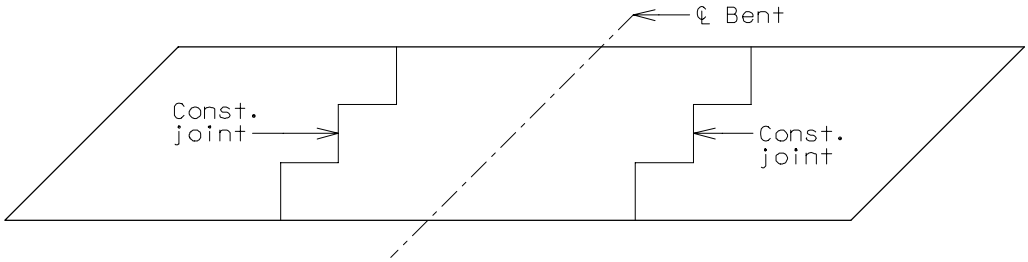

LONGITUDINAL CONSTRUCTION JOINTS

Wide Flange Beam, Plate Girder and Prestressed Girder

Normally, the maximum finishing width is 54′. Larger widths require longitudinal construction joints. Normally, the widest section of slab shall be poured first. During construction, the engineer may opt to eliminate this construction joint. Include note (H6.18) on roadways with longitudinal construction joints to address this option.

The finishing width shall be adjusted to finish the surface approximately parallel to the skew (i.e., skewed transverse construction joints) if the angle of skew exceeds 45° or if the angle of skew exceeds 30° and the ratio of placement width divided by span lengths equals or exceeds 0.8.

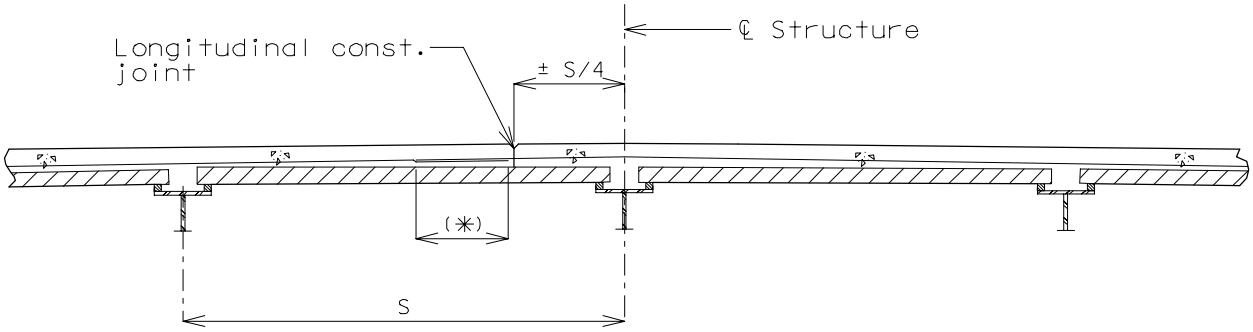

WIDE FLANGE BEAM OR PLATE GIRDER

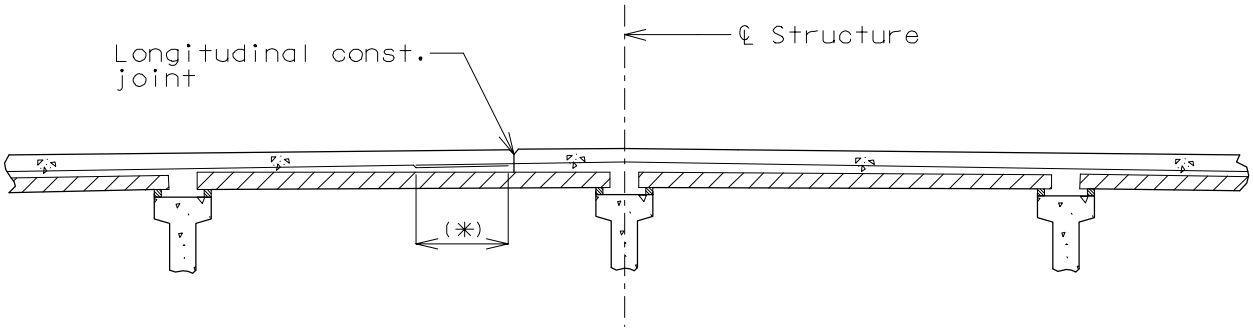

PRESTRESSED GIRDER

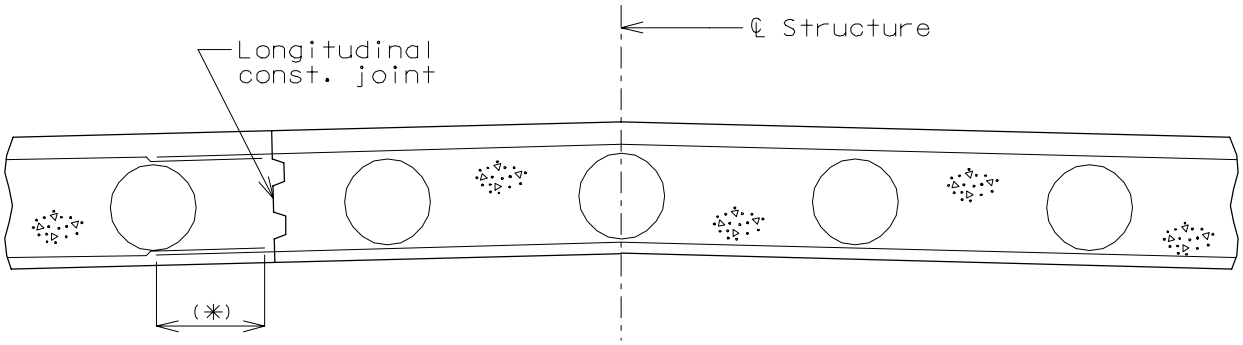

VOIDED SLAB

(✳) See Lap Splices of Tension Reinforcement - Section 2.4

POURING AND FINISHING CONCRETE ROADWAY SLABS

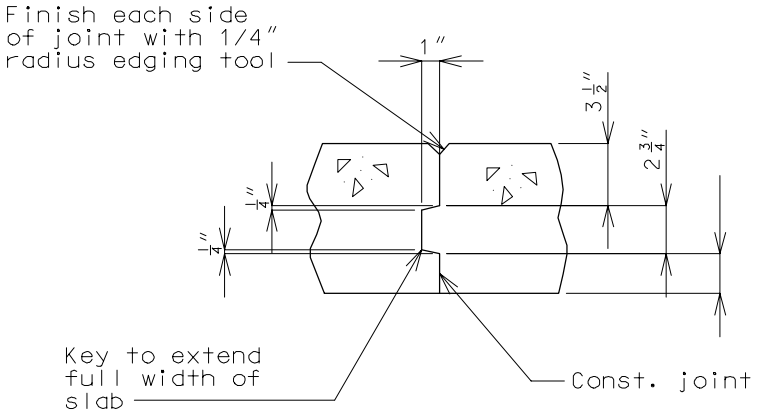

TYPICAL C.I.P. CONST. JOINT

Coefficients for Length of Pour

Span Ratio n													
Spans	Coef.	1.0	1.1	1.2	1.25	1.3	1.4	1.5	1.6	1.7	1.8	1.9	2.0
2	a	.4	---	---	---	---	---	---	---	---	---	---	---
3	a	.4	.35	.30	.28	.25	.22	.20	.19	.18	.17	.16	.15
3	b	.15	.18	.21	.25	.30	.33	.35	.36	.37	.38	.39	.40
4 & 5	a	.4	.35	.30	.28	.25	.22	.20	.19	.18	.17	.16	.15
4 & 5	b	.15	.18	.21	.25	.30	.33	.35	.36	.37	.38	.39	.40
4 & 5	c	.15	.18	.21	.25	.30	.33	.35	.36	.37	.38	.39	.40

Use adjacent spans for ratio n.

Span lengths to be used are center to center of bearing.

Modify the dimensions produced by the coefficients on wide roadways and large skews if they produce construction joints that are within 6" of the additional negative slab reinforcement (see Section 2.4).

Dimensions, except for terminal lengths of end spans, shall be to the nearest foot.

For 6 & 7 spans, use same coefficients for a, b, & c as for 4 & 5 spans.

SLAB POURING SEQUENCE - CASE I CONTINUOUS SPANS
I-BEAM, PLATE GIRDER AND PRESTRESSED CONCRETE: (2-SPAN)

Note: When multi-series of spans are used - see Structural Project Manager. Slab pours shown are to be reversed for bridges on a minus grade. See Section 4-H6 for notes to be placed on the bridge plans.

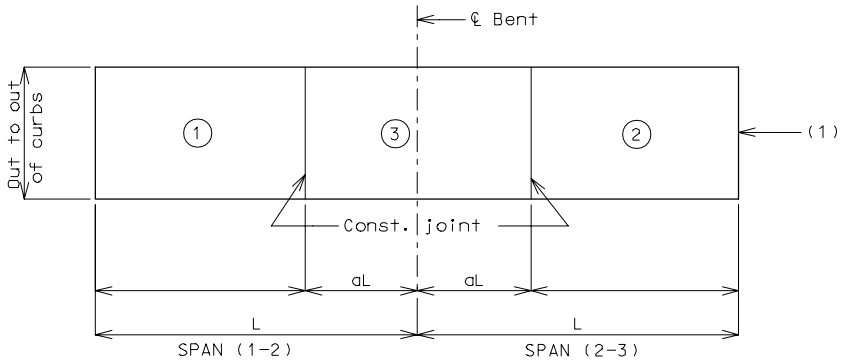

(1) Fill face of end bent or appropriate exposed plates, angles, wide flanges, and joint filler required for expansion devices.
Note: For prestressed structures, "aL" may be made shorter than that indicated by the coefficients to balance pours.

	Sequence of Pours			Min. Rate of Pour Cu. Yds./Hr.	
	Direction			With Retarder	(✳) No Retarder
Basic Sequence	1	2	3	25	25
	Either Direction				
Alternate pours to the basic skip sequence are subject to the approval of the engineer in accordance with Sec 703.					
Alternate "A" Pours	1	3 + 2		(2)	(2)
	End to 3	1 to End			
Alternate "B" Pours	1 + 3 + 2			(2)	(2)
	End to End				

(2) See Bridge Manual Section 3.30, Page 1.6-1 for the minimum pour rates.

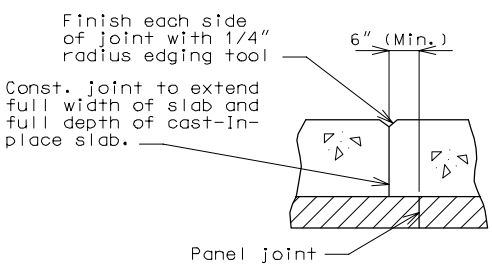

(✳) Not used for prestressed girders.

SECTION THRU CONSTRUCTION JOINT

SLAB POURING SEQUENCE - CASE I CONTINUOUS SPANS (CONT.)
I-BEAM, PLATE GIRDER AND PRESTRESSED CONCRETE: (3-SPAN)

Note: When multi-series of spans are used - see Structural Project Manager. Slab pours shown are to be reversed for bridges on a minus grade. See Section 4-H6 for notes to be placed on the bridge plans.

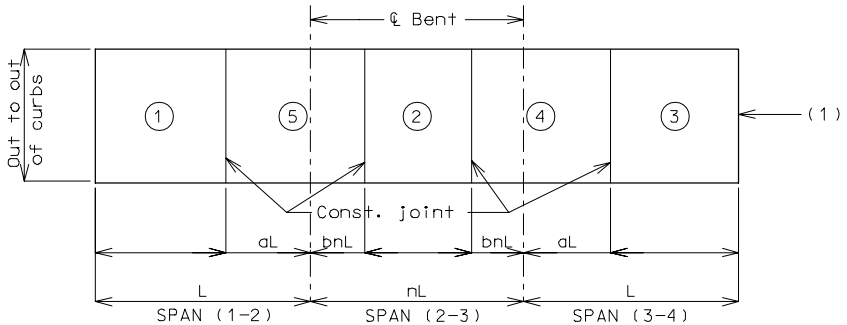

(1) Fill face of end bent or appropriate exposed plates, angles, wide flanges, and joint filler required for expansion devices.
Note: For prestressed structures, "aL" and "bnL" may be made shorter than that indicated by the coefficients to balance pours.

	Sequence of Pours					Min. Rate of Pour Cu. Yds./Hr.	
	Direction					With Retarder	(✳) No Retarder
Basic Sequence	1	2	3	4	5	25	25
	Either Direction						
Alternate pours to the basic skip sequence are subject to the approval of the engineer in accordance with Sec 703.							
Alternate "A" Pours	1	5 + 2	4 + 3			(2)	(2)
	End to 5	1 to 4	2 to End				
Alternate "B" Pours	1 + 5 + 2	4 + 3				(2)	(2)
	End to 4	2 to End					
Alternate "C" Pours	1 + 5 + 2 + 4 + 3					(2)	(2)
	End to End						

(2) See Bridge Manual Section 3.30, Page 1.6-1 for the minimum pour rates.

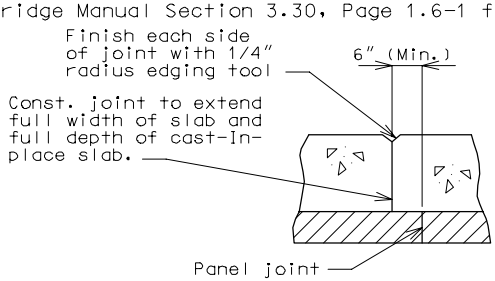

(✳) Not used for prestressed girders.

SECTION THRU CONSTRUCTION JOINT

SLAB POURING SEQUENCE - CASE I CONTINUOUS SPANS (CONT.)
I-BEAM, PLATE GIRDER AND PRESTRESSED CONCRETE: (4-SPAN)

Note: When multi-series of spans are used - see Structural Project Manager. Slab pours shown are to be reversed for bridges on a minus grade. See Section 4-H6 for notes to be placed on the bridge plans.

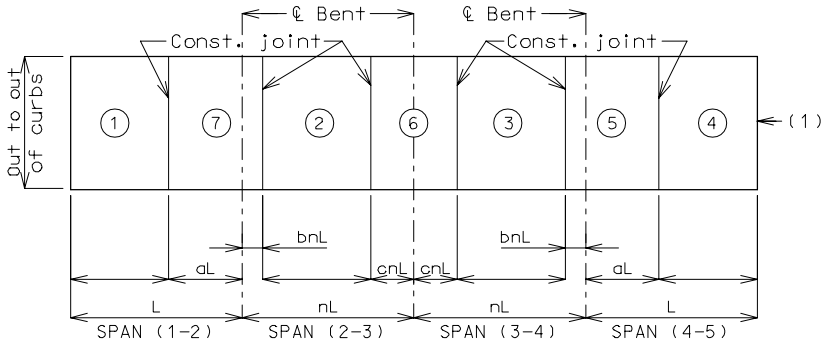

(1) Fill face of end bent or appropriate exposed plates, angles, wide flanges, and joint filler required for expansion devices.
Note: For prestressed structures, "aL" and "bnL" may be made shorter than that indicated by the coefficients to balance pours.

	Sequence of Pours							Min. Rate of Pour Cu. Yds./Hr.	
	Direction							With Retarder	(✳) No Retarder
Basic Sequence	1	2	3	4	5	6	7	25	25
	Either Direction								
Alternate pours to the basic skip sequence are subject to the approval of the engineer in accordance with Sec 703.									
Alternate "A" Pours	1	7 + 2	6 + 3	5 + 4				(2)	(2)
	End to 7	1 to 6	2 to 5	3 to End					
Alternate "B" Pours	1 + 7 + 2	6 + 3	5 + 4					(2)	(2)
	End to 6	2 to 5	3 to End						
Alternate "C" Pours	1 + 7 + 2	6 + 3 + 5 + 4						(2)	(2)
	End to 6	2 to End							
Alternate "D" Pours	1 + 7 + 2 + 6 + 3 + 5 + 4							(2)	(2)
	End to End								

(2) See Bridge Manual Section 3.30, Page 1.6-1 for the minimum pour rates.

(✳) Not used for prestressed girders.

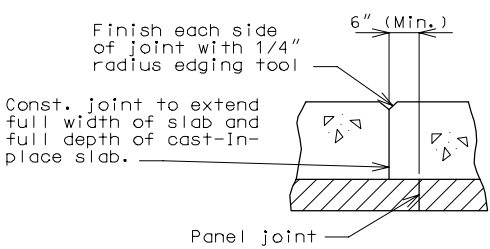

SECTION THRU CONSTRUCTION JOINT

SLAB POURING SEQUENCE - CASE I CONTINUOUS SPANS (CONT.)
I-BEAM, PLATE GIRDER AND PRESTRESSED CONCRETE: (5-SPAN)

Note: When multi-series of spans are used - see Structural Project Manager. Slab pours shown are to be reversed for bridges on a minus grade. See Section 4-H6 for notes to be placed on the bridge plans.

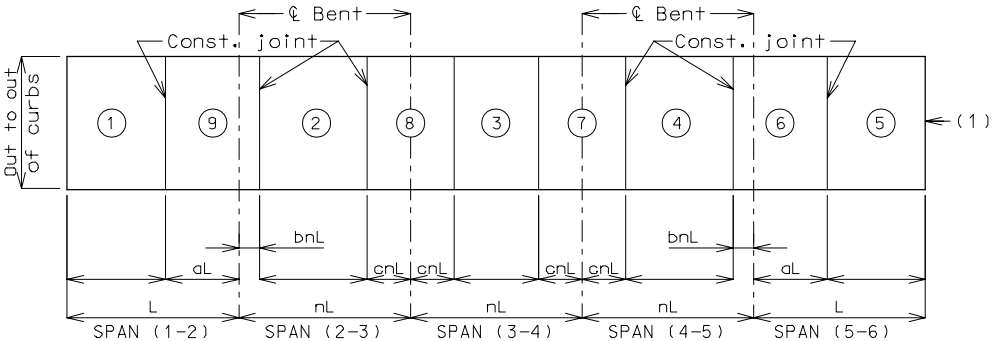

(1) Fill face of end bent or appropriate exposed plates, angles, wide flanges, and joint filler required for expansion devices.
Note: For prestressed structures, "aL" and "bnL" may be made shorter than that indicated by the coefficients to balance pours.

	Sequence of Pours									Min. Rate of Pour Cu. Yds./Hr.	
	Direction									With Retarder	(✳) No Retarder
Basic Sequence	1	2	3	4	5	6	7	8	9	25	25
	Either Direction										
Alternate pours to the basic skip sequence are subject to the approval of the engineer in accordance with Sec 703.											
Alternate "A" Pours	1	9 + 2		8 + 3		7 + 4		6 + 5		(2)	(2)
	End to 9	1 to 8		2 to 7		3 to 6		4 to End			
Alternate "B" Pours	1 + 9 + 2			8 + 3			7 + 4 + 6 + 5			(2)	(2)
	End to 8			2 to 7			3 to End				
Alternate "C" Pours	1 + 9 + 2 + 8 + 3					7 + 4 + 6 + 5				(2)	(2)
	End to 7					3 to End					
Alternate "D" Pours	1 + 9 + 2 + 8 + 3 + 7 + 4 + 6 + 5									(2)	(2)
	End to End										

(2) See Bridge Manual Section 3.30, Page 1.6-1 for the minimum pour rates.

(✳) Not used for prestressed girders.

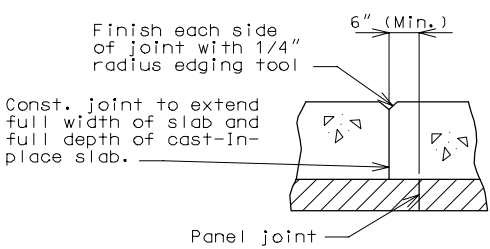

SECTION THRU CONSTRUCTION JOINT

SLAB POURING SEQUENCE - CASE II CONTINUOUS SPANS
PRESTRESSED CONCRETE: (2-SPAN)

Note: Pouring sequence used on prestressed concrete with a basic rate of 25 cu. yds./hr. When multi-series of spans are used - see Structural Project Manager. Slab pours shown are to be reversed for bridges on a minus grade. See Section 4-H6 for notes to be placed on the bridge plans.

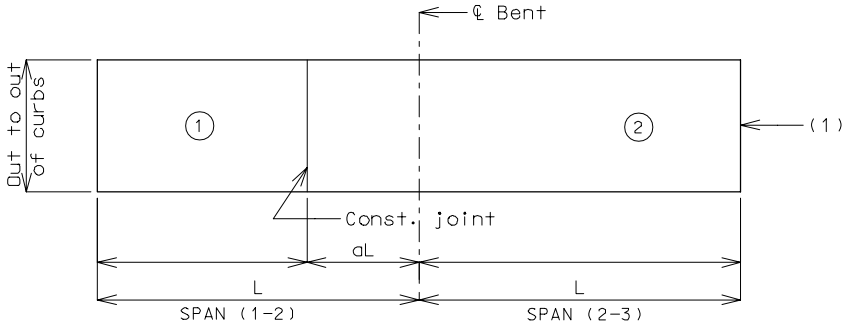

(1) Fill face of end bent or appropriate exposed plates, angles, wide flanges, and joint filler required for expansion devices.

	Sequence of Pours		Min. Rate of Pour Cu. Yds./Hr.
	Direction		With Retarder
Basic Sequence	1	2	25
	End to 2	1 to End	
Alternate pours to the basic sequence are subject to the approval of the engineer in accordance with Sec 703.			
Alternate "A" Pours	1 + 2		(2)
	End to End		

(2) See Bridge Manual Section 3.30, Page 1.6-1 for the minimum pour rates.

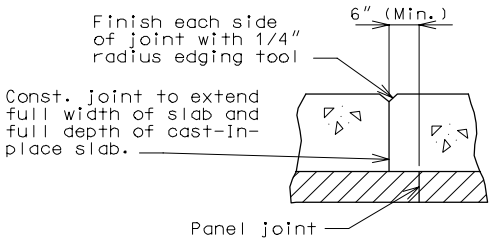

SECTION THRU CONSTRUCTION JOINT

SLAB POURING SEQUENCE - CASE II CONTINUOUS SPANS (CONT.)
PRESTRESSED CONCRETE: (3-SPAN)

Note: Pouring sequence used on prestressed concrete with a basic rate of 25 cu. yds./hr. When multi-series of spans are used - see Structural Project Manager. Slab pours shown are to be reversed for bridges on a minus grade. See Section 4-H6 for notes to be placed on the bridge plans.

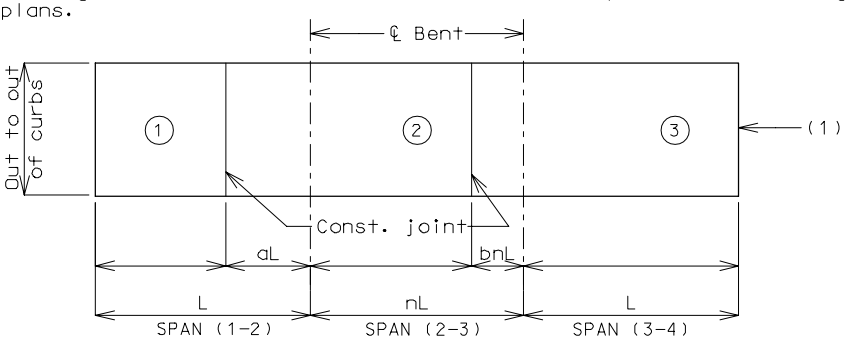

(1) Fill face of end bent or appropriate exposed plates, angles, wide flanges, and joint filler required for expansion devices.
Note: For prestressed structures, "aL" and "bnL" may be made shorter than that indicated by the coefficients to balance pours.

	Sequence of Pours			Min. Rate of Pour Cu. Yds./Hr.
	Direction			With Retarder
Basic Sequence	1	2	3	25
	End to 2	1 to 3	2 to End	
Alternate pours to the basic sequence are subject to the approval of the engineer in accordance with Sec 703.				
Alternate "A" Pours	1 + 2	3		(2)
	End to 3	2 to End		
Alternate "B" Pours	1 + 2 + 3			(2)
	End to End			

(2) See Bridge Manual Section 3.30, Page 1.6-1 for the minimum pour rates.

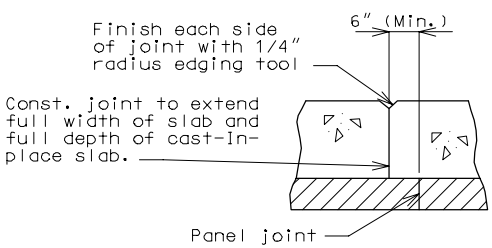

SECTION THRU CONSTRUCTION JOINT

SLAB POURING SEQUENCE - CASE II CONTINUOUS SPANS (CONT.)
PRESTRESSED CONCRETE: (4-SPAN)

Note: Pouring sequence used on prestressed concrete with a basic rate of 25 cu. yds./hr. When multi-series of spans are used - see Structural Project Manager. Slab pours shown are to be reversed for bridges on a minus grade. See Section 4-H6 for notes to be placed on the bridge plans.

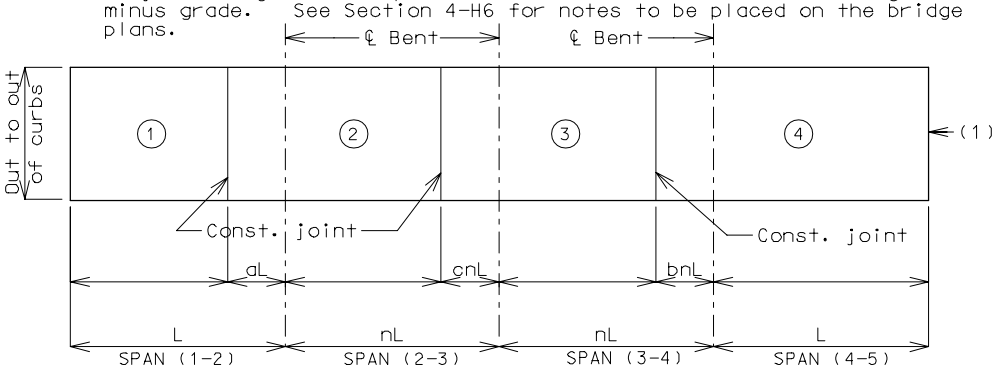

(1) Fill face of end bent or appropriate exposed plates, angles, wide flanges, and joint filler required for expansion devices.
Note: For prestressed structures, "aL" and "bnL" may be made shorter than that indicated by the coefficients to balance pours.

	Sequence of Pours				Min. Rate of Pour Cu. Yds./Hr.
	Direction				With Retarder
Basic Sequence	1	2	3	4	25
	End to 2	1 to 3	2 to 4	3 to End	
Alternate pours to the basic sequence are subject to the approval of the engineer in accordance with Sec 703.					
Alternate "A" Pours	1 + 2	3	4		(2)
	End to 3	2 to 4	3 to End		
Alternate "B" Pours	1 + 2	3 + 4			(2)
	End to 3	2 to End			
Alternate "C" Pours	1 + 2 + 3 + 4				(2)
	End to End				

(2) See Bridge Manual Section 3.30, Page 1.6-1 for the minimum pour rates.

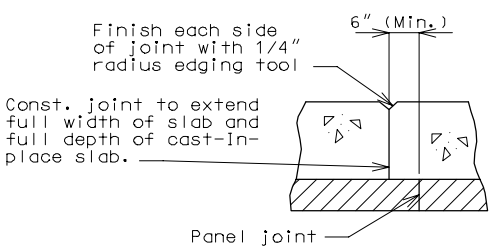

SECTION THRU CONSTRUCTION JOINT

SLAB POURING SEQUENCE - CASE II CONTINUOUS SPANS
PRESTRESSED CONCRETE: (5-SPAN)

Note: Pouring sequence used on prestressed concrete with a basic rate of 25 cu. yds./hr. When multi-series of spans are used - see Structural Project Manager. Slab pours shown are to be reversed for bridges on a minus grade. See Section 4-H6 for notes to be placed on the bridge plans.

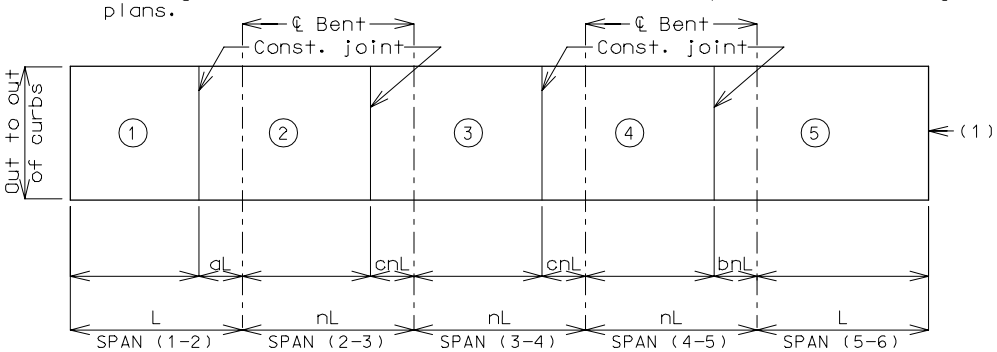

(1) Fill face of end bent or appropriate exposed plates, angles, wide flanges, and joint filler required for expansion devices.
Note: For prestressed structures, "aL" and "bnL" may be made shorter than that indicated by the coefficients to balance pours.

	Sequence of Pours					Min. rate of pour Cu. Yds./Hr.
	Direction					With Retarder
Basic Sequence	1	2	3	4	5	25
	End to 2	1 to 3	2 to 4	3 to 5	4 to End	
Alternate pours to the basic sequence are subject to the approval of the engineer in accordance with Sec 703.						
Alternate "A" Pours	1 + 2	3	4 + 5			(2)
	End to 3	2 to 4	3 to End			
Alternate "B" Pours	1 + 2 + 3	4 + 5				(2)
	End to 4	3 to End				
Alternate "C" Pours	1 + 2 + 3 + 4 + 5					(2)
	End to End					

(2) See Bridge Manual Section 3.30, Page 1.6-1 for the minimum pour rates.

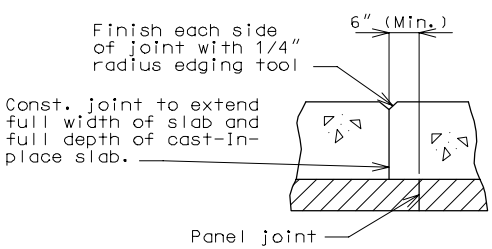

SECTION THRU CONSTRUCTION JOINT

TIMBER HEADER

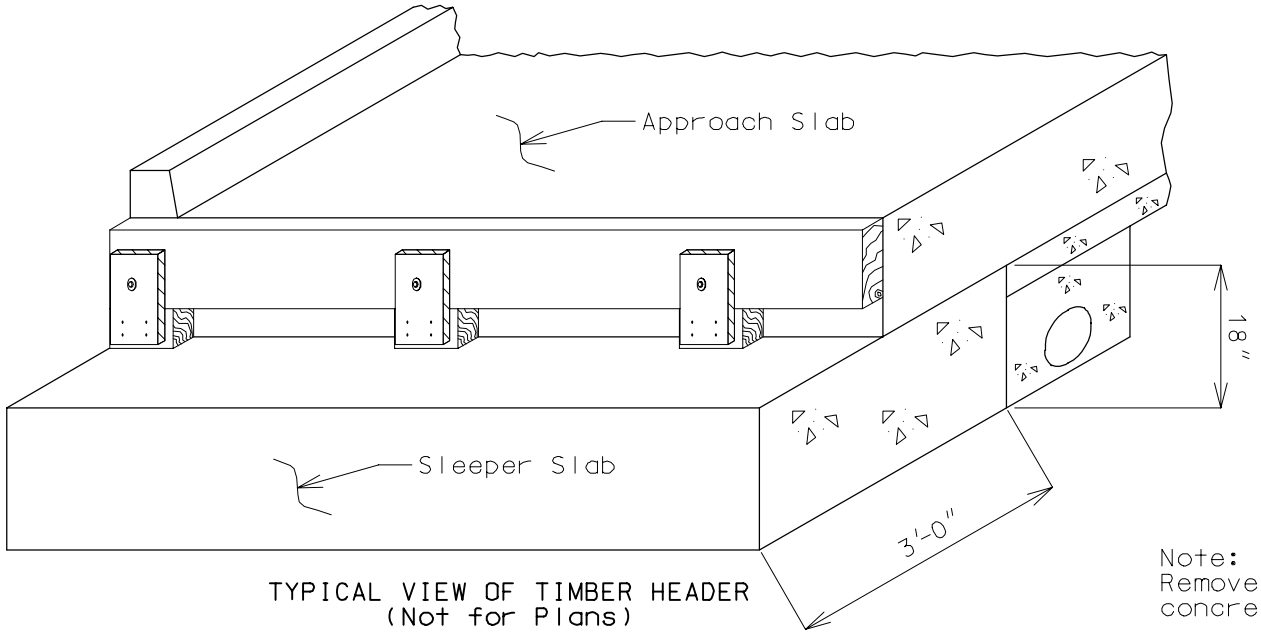

TYPICAL VIEW OF TIMBER HEADER
(Not for Plans)

Note:
Remove timber header when concrete pavement is placed.

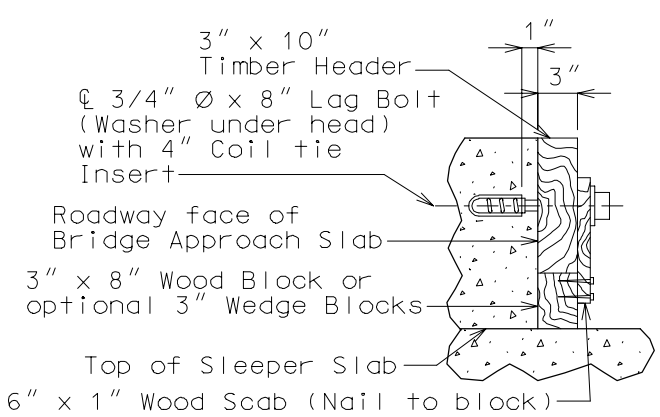

SECTION A-A

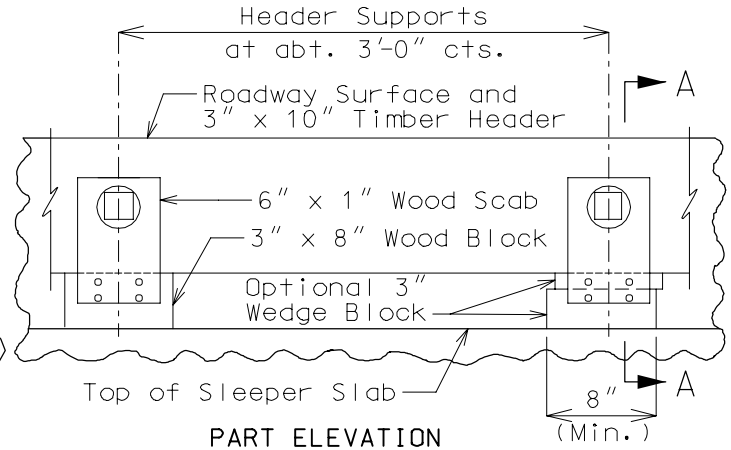

PART ELEVATION

DETAILS OF TIMBER HEADER

Note: Cost of timber headers complete in place shall be included in price bid for Bridge Approach Slab (Bridge).

DRIP BEVEL: SAFETY BARRIER BRIDGE CURBS & SIDEWALKS

Single Drip Bevel

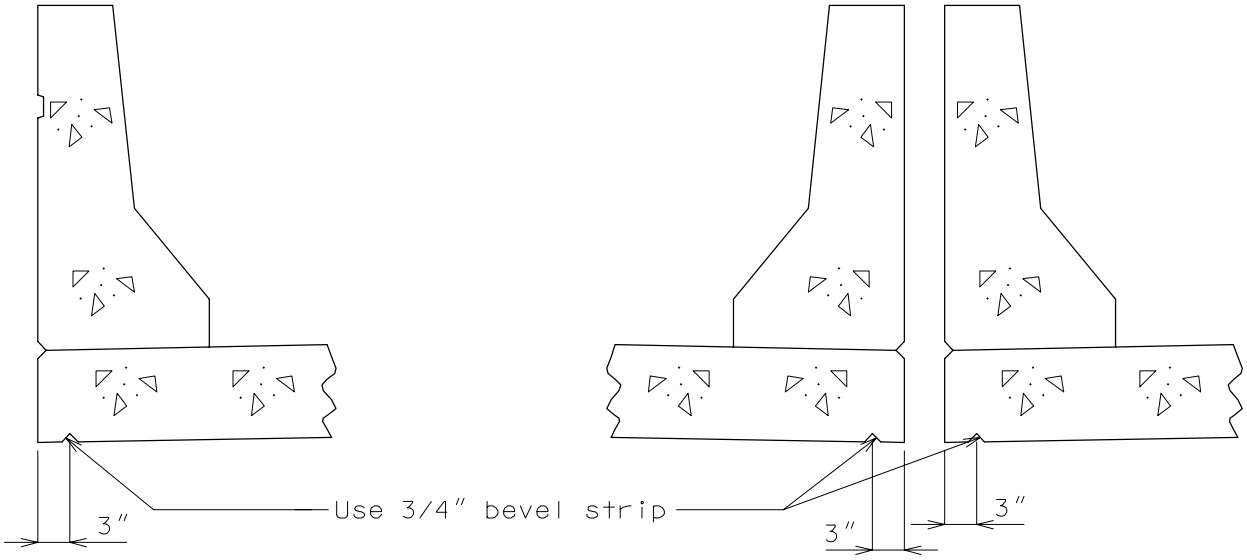

STANDARD BRIDGES MEDIANS

Use a single drip bevel on all standard bridges, the low side of superelevated bridges, the high side of superelevated continuous concrete slab bridges, and at medians.

Double Drip Bevel

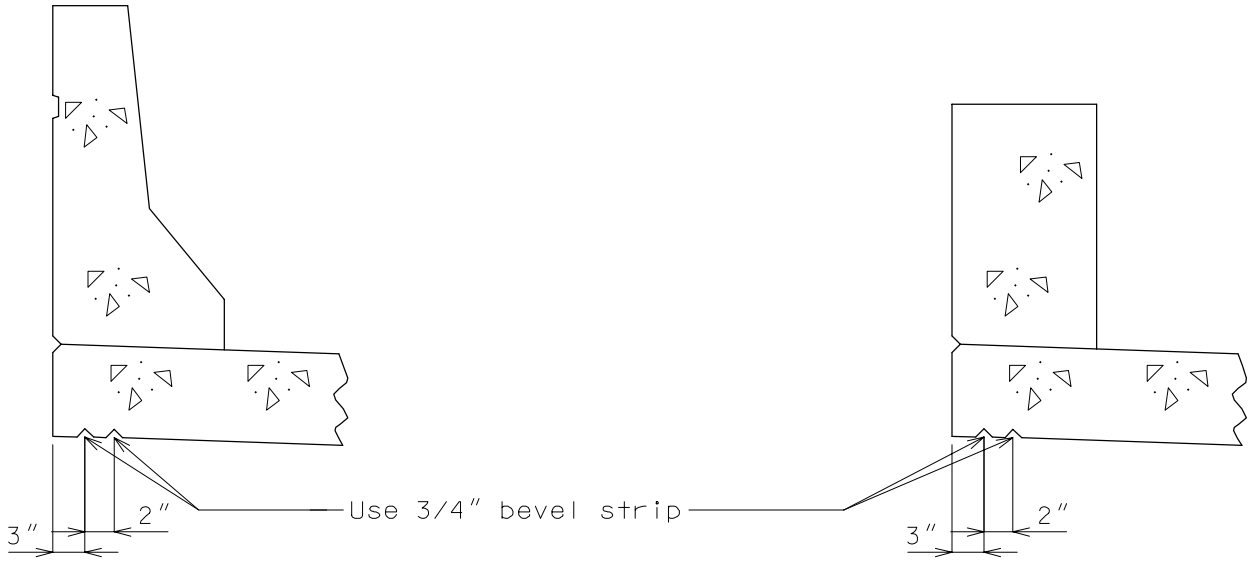

SUPERELEVATED BRIDGES SIDEWALKS

Use a double drip bevel on the high side of all superelevated bridges (except continuous concrete slab bridges), box girder bridges and all bridges with sidewalk sloping as shown.

DESIGN OF TIMBER FLOOR

Maximum stringer spacing as determined by strength of timber floor.		
Stress = 1,200 lbs. per square inch		
	H-10	H-15
(✳) 3″ x 12″ Plank	18″ + $\frac{1}{2}$ Flange Width	16″ + $\frac{1}{2}$ Flange Width
4″ Laminated Floor	2′-11″ + $\frac{1}{2}$ Flange Width	2′-3″ + $\frac{1}{2}$ Flange Width
6″ Laminated Floor	6′-0″ = $\frac{1}{2}$ Flange Width	4′-4″ + $\frac{1}{2}$ Flange Width
Stress = 1,600 lbs. per square inch		
	H-10	H-15
3″ x 12″ Plank	23″ + $\frac{1}{2}$ Flange Width	21″ + $\frac{1}{2}$ Flange Width
4″ Laminated Floor	3′-9″ + $\frac{1}{2}$ Flange Width	2′-11$\frac{1}{2}$″ + $\frac{1}{2}$ Flange Width
6″ Laminated Floor	7′-10$\frac{3}{4}$″ + $\frac{1}{2}$ Flange Width	5′-9″ + $\frac{1}{2}$ Flange Width

(✳) 3″ x 12″ Plank without treads.

In general, the 5″ depth (concrete filled to half depth) steel grid bridge flooring shall be specified. Bar spacing may vary as necessary to meet minimum section modulus requirements. Main member spacing shall not exceed 10″ and cross bar spacing shall not exceed 4″. At present, the manufacturers of the following types have provided data to show they are acceptable:

Greulich 5″ Standard

Foster 5″ Standard

The section properties (n = 8) and maximum span for HS20 loading have been computed for these types and are as follows:

Company	(For Design Purpose only) Weight (PSF) (Steel & Conc.)	Main bar Spacing	Cross bar Spacing	Moment of Inertia (in.^{4}/Ft.)		
				Mid Span		Over-Support
				Conc.	Steel	Steel
Greulich	48.0	$7\frac{1}{2}$″	$3\frac{3}{4}$″	99.41	12.43	9.03
Foster	48.0	8″	4″	128.1	16.01	12.25

Company	Section Modulus (in.^{3}/Ft.)				Maximum Span (✳)			
	Mid-Span		Over-Support		Simple Span		Continuous Spans	
	Conc. (Top)	Steel (Bott.)	Steel (Top)	Steel (Bott.)	ASTM A709 Gr.36	ASTM A709 Gr.50W	ASTM A709 Gr.36	ASTM A709 Gr.50W
Greulich	59.5	3.53	3.90	3.14	4′-4″	5′-10″	5′-10″	7′-1″
Foster	72.5	4.68	5.24	4.30	5′-9″	7′-5″	7′-2″	9′-4″

The cross-section DETAILS used in computing the section properties are shown on the sketches on the following sheets. Maximum span determination included an allowance for a 35#/sq.ft. future wearing surface and assumed a wheel load to be distributed, normal to the main bars, over a width of 4′-0″.

(Place the following note on the Bridge Plans with the Steel Grid Details.

Note: The steel grid deck shall be electrically grounded.

(✳) For main beams of grid either parallel or perpendicular to traffic.

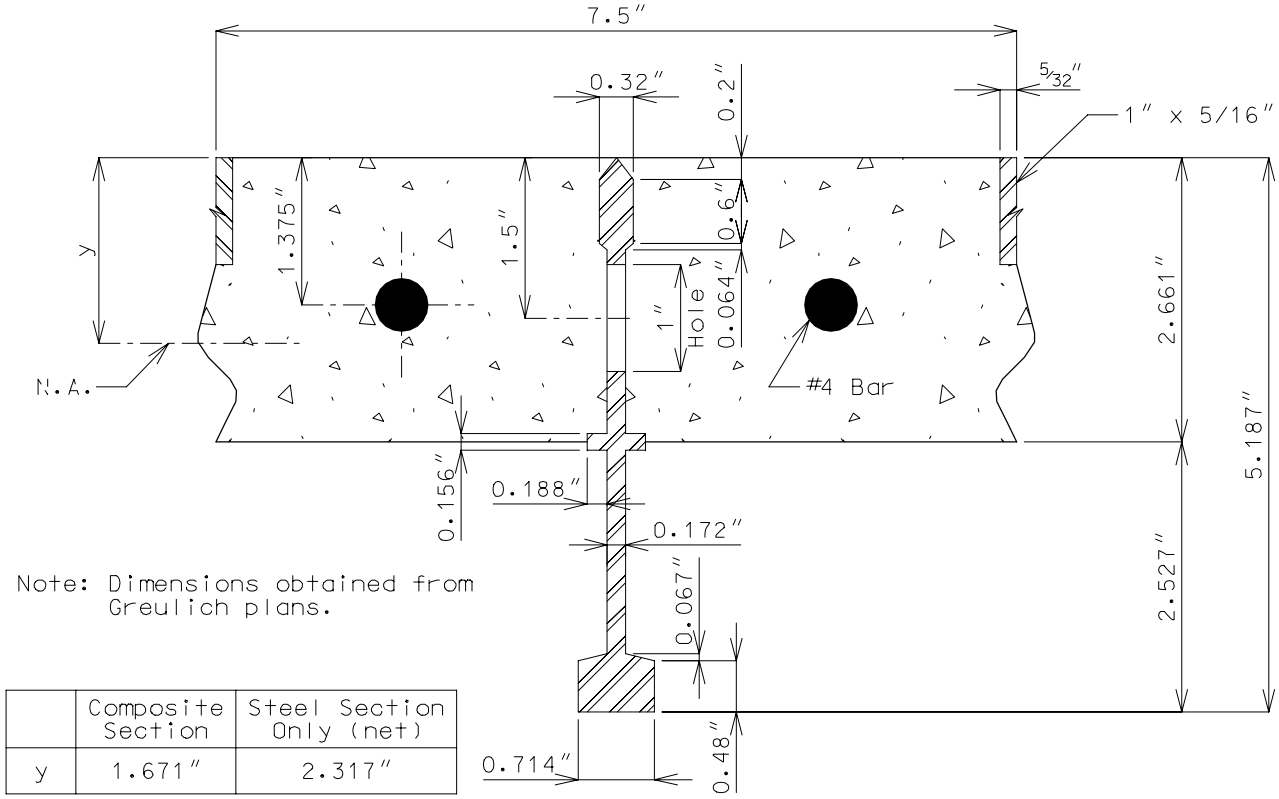

Note: Dimensions obtained from Greulich plans.

	Composite Section	Steel Section Only (net)
y	1.671"	2.317"

GREULICH 5" STANDARD

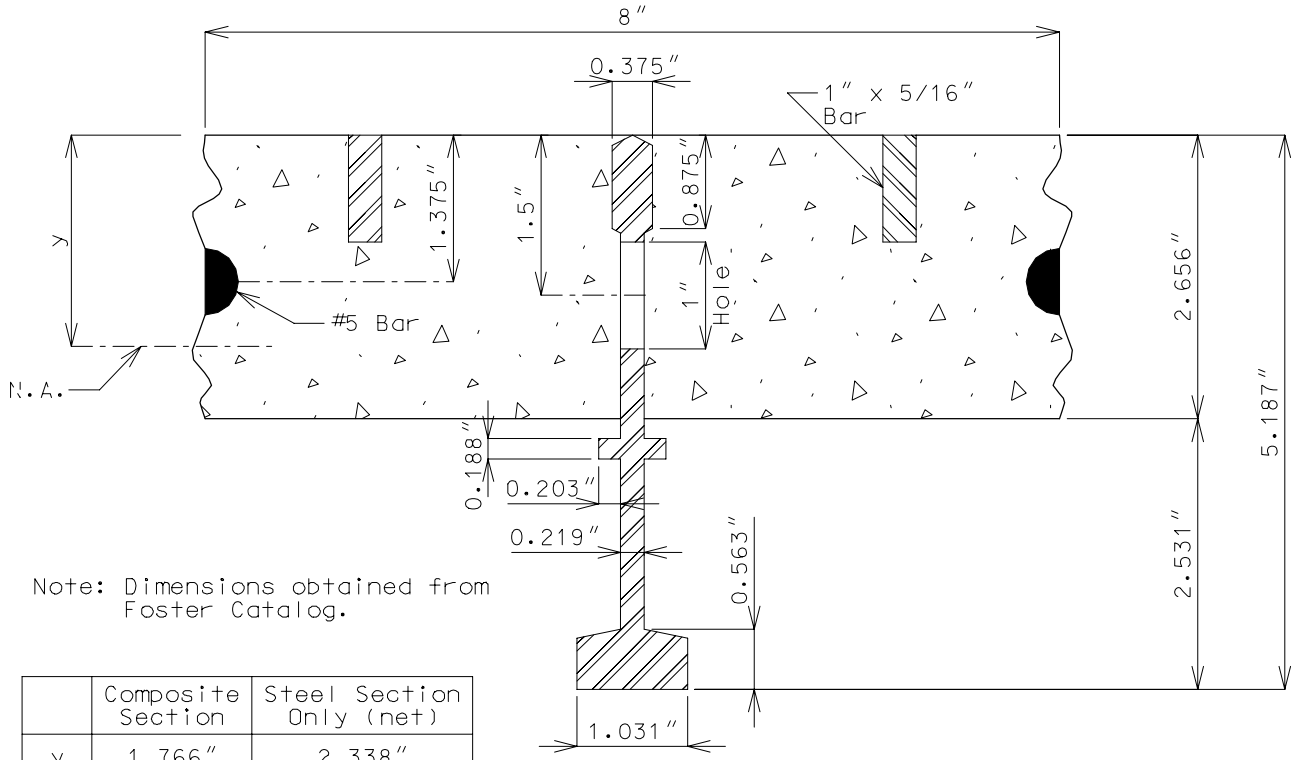

Note: Dimensions obtained from Foster Catalog.

	Composite Section	Steel Section Only (net)
y	1.766"	2.338"

FOSTER 5" STANDARD

DIMENSIONS

Safety Barrier Bridge Curb

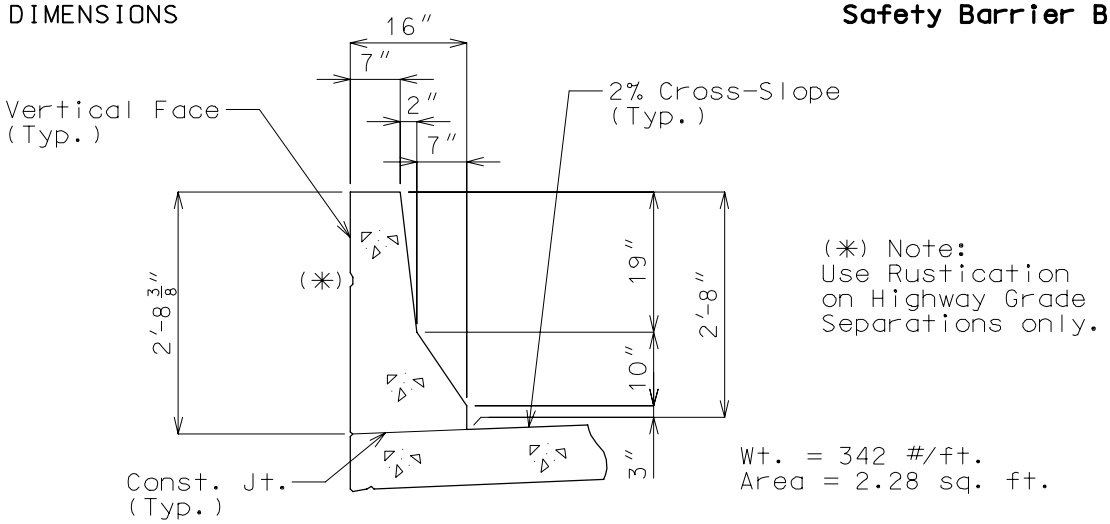

NO WEARING SURFACE

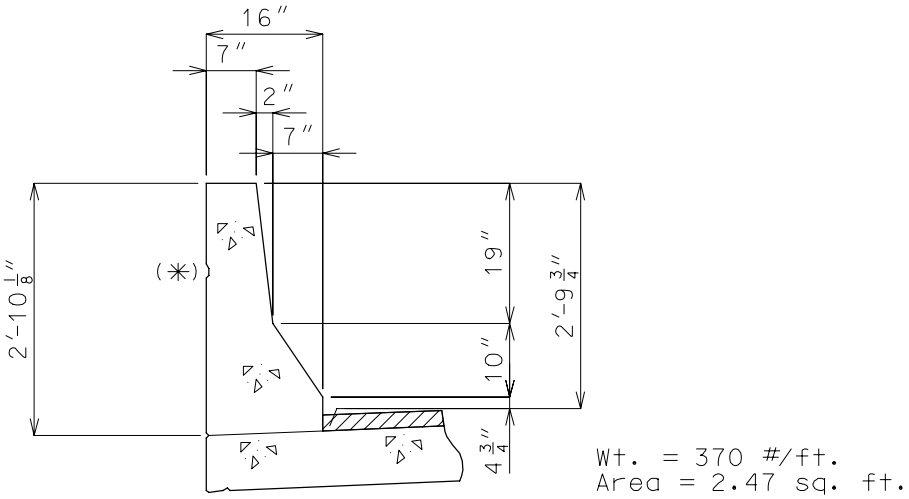

1-3/4″ WEARING SURFACE

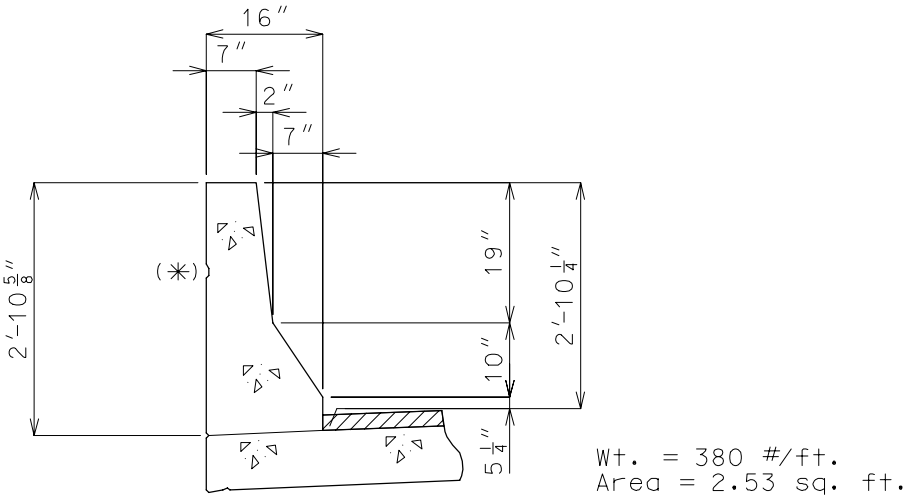

2-1/4″ WEARING SURFACE

DIMENSIONS (CONT.) **Safety Barrier Bridge Curb**

"A" = 2'-8" + (Superelev. Slope x 16")
"B" = 2'-8" - (Superelev. Slope x 16")

(✳) Use Rustication on Highway Grade Separations only.

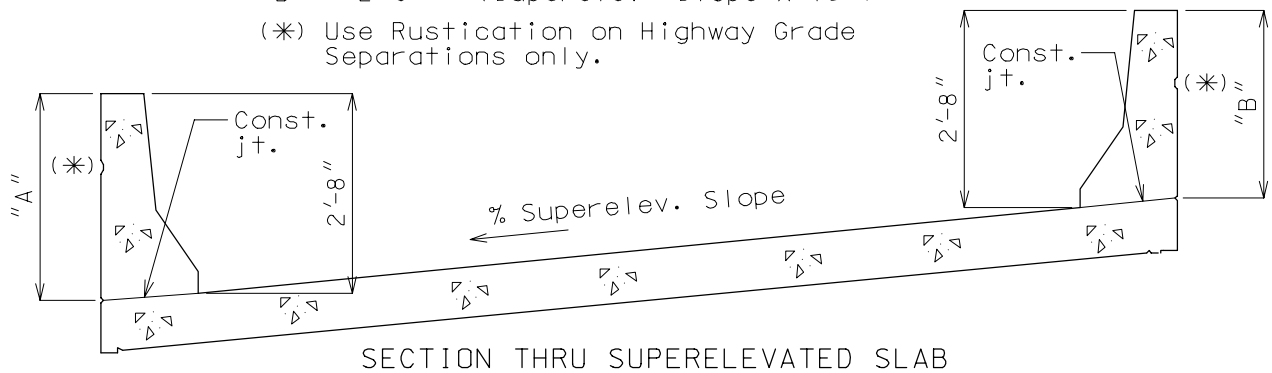

SECTION THRU SUPERELEVATED SLAB

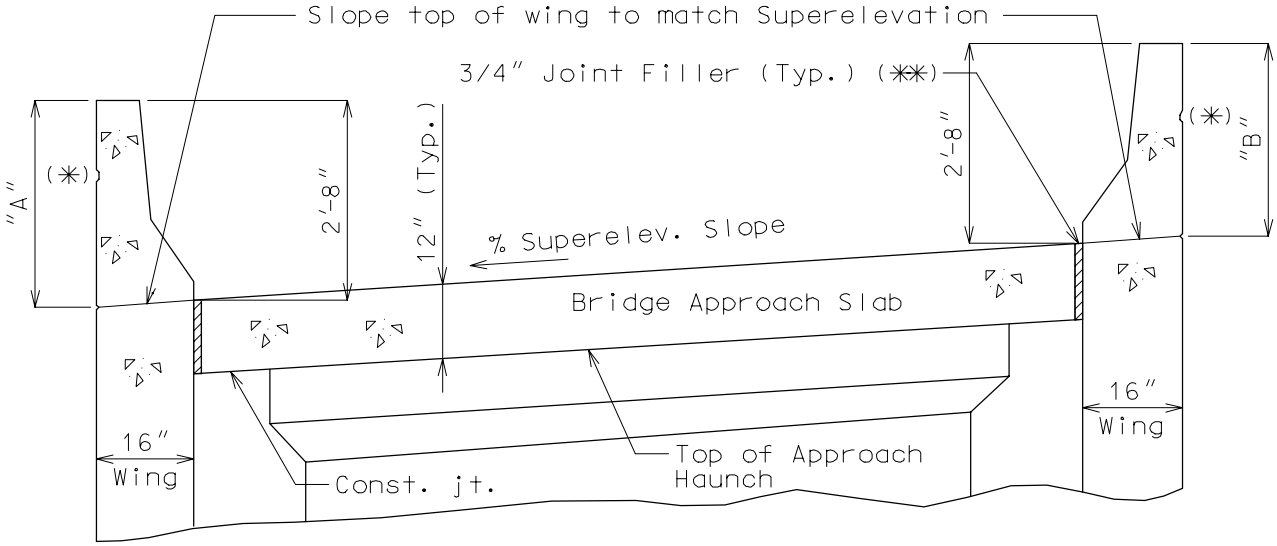

SECTION THRU SUPERELEVATED SLAB AT INTEGRAL END BENT

(✳✳) Seal joint with joint sealant between approach slab and wing/barrier curb for all bridges, see Special Provisions.

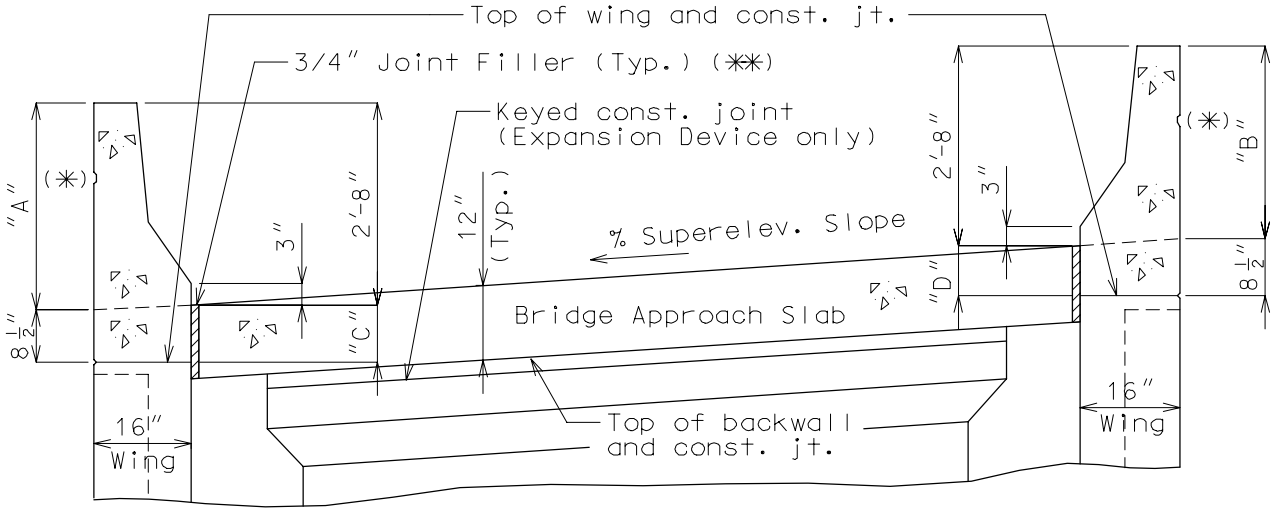

SECTION THRU SUPERELEVATED SLAB AT NON-INTEGRAL END BENT

"C" = 8-1/2" + (Superelev. Slope x 16")
"D" = 8-1/2" - (Superelev. Slope x 16")

REINFORCEMENT
(NO WEARING SURFACE)

Safety Barrier Bridge Curb

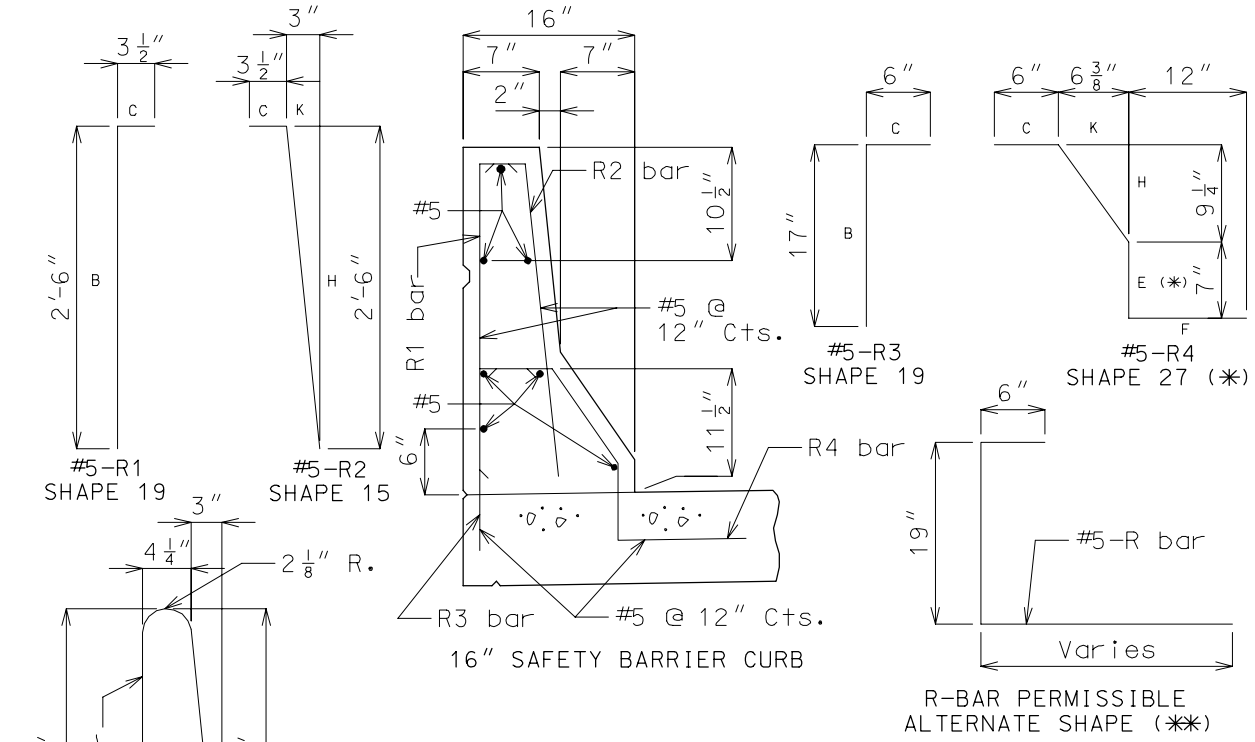

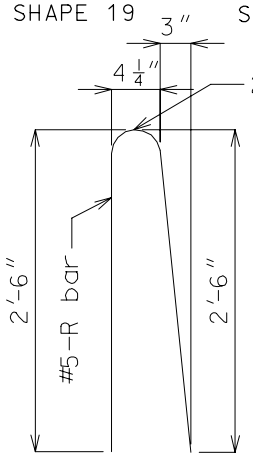

R-BAR PERMISSIBLE
ALTERNATE SHAPE (***)

(*) Increase leg for latex or low slump concrete wearing surface.

(**) The R3 bar and #5 bottom transverse slab bar in cantilever (P/S panels only) combination may be furnished as one bar as shown, at the contractor's option.

(***) The R1 and R2 bar combination may be furnished as one bar as shown, at the contractor's option.

Note: Use same grade reinforcing steel in Barrier Curb as in slab. Splice length for #5 bars in Barrier Curb = 35".

Dimensions shown are also typical for structures with latex or low slump concrete (except as indicated).

REINFORCEMENT
(1-3/4" WEARING SURFACE)

Safety Barrier Bridge Curb

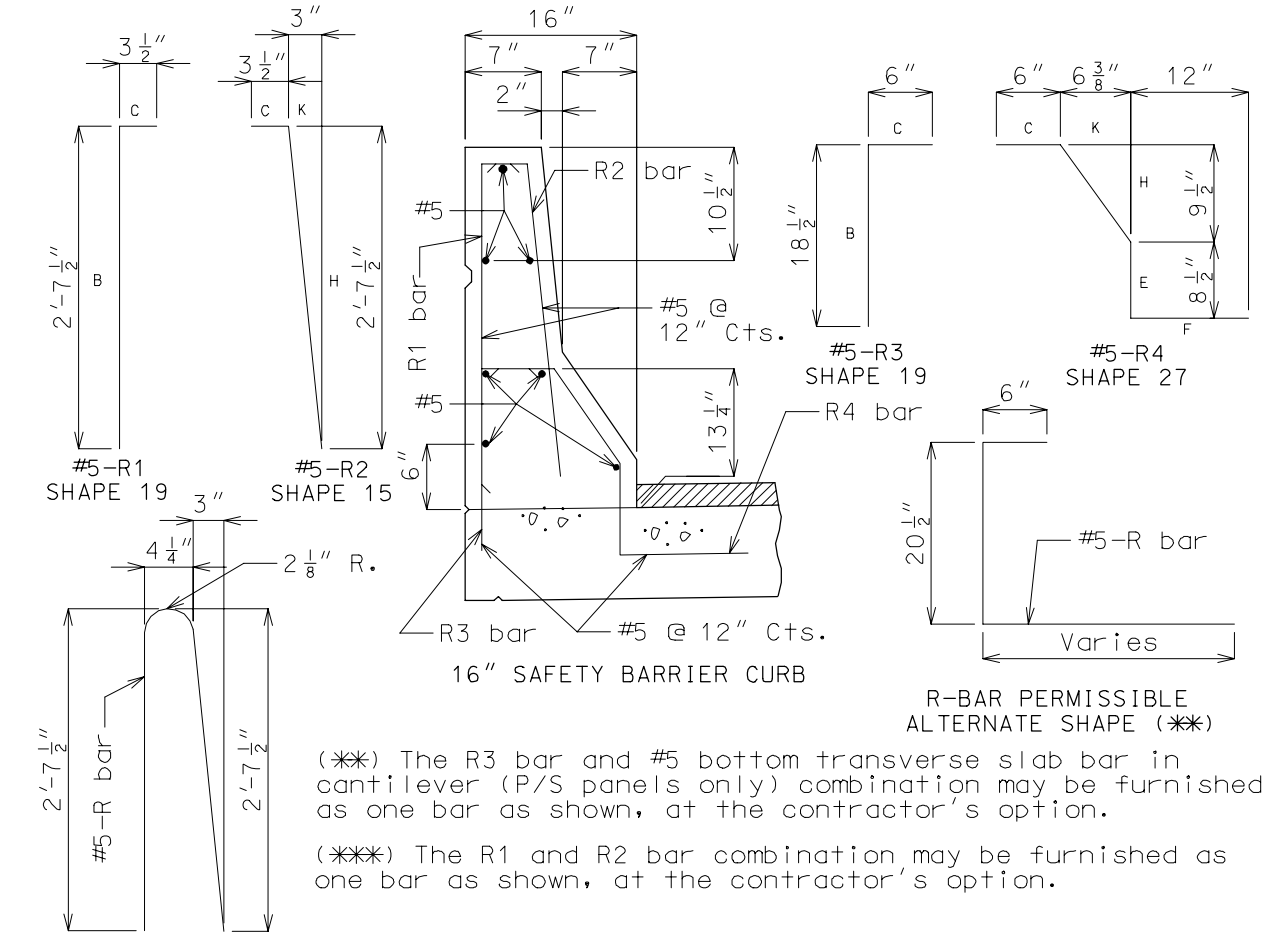

R-BAR PERMISSIBLE
ALTERNATE SHAPE (✱✱✱)

(✱✱) The R3 bar and #5 bottom transverse slab bar in cantilever (P/S panels only) combination may be furnished as one bar as shown, at the contractor's option.

(✱✱✱) The R1 and R2 bar combination may be furnished as one bar as shown, at the contractor's option.

Note: Use same grade reinforcing steel in Barrier Curb as in slab. Splice length for #5 bars in Barrier Curb = 35".

Dimensions shown are also typical for structures with latex or low slump concrete (except as indicated).

REINFORCEMENT
(2-1/4" WEARING SURFACE)

Safety Barrier Bridge Curb

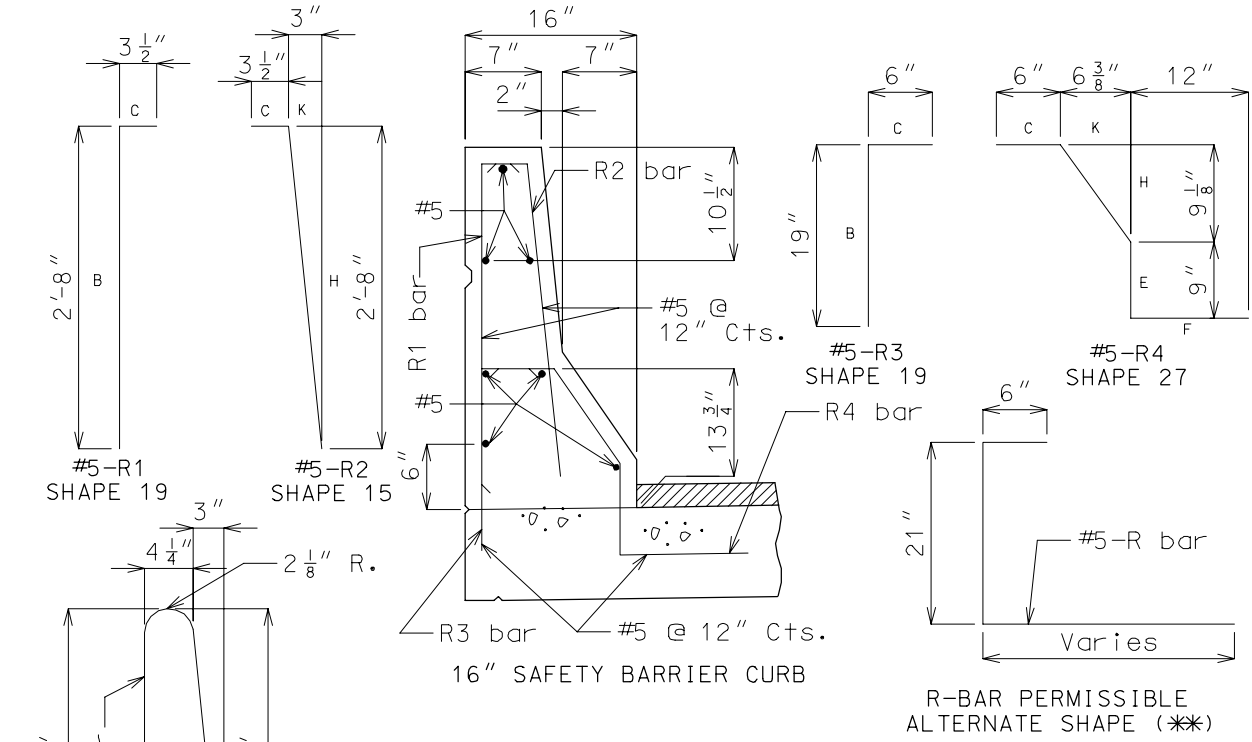

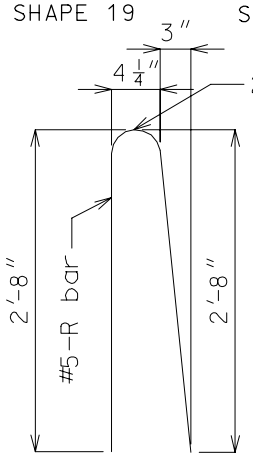

R-BAR PERMISSIBLE
ALTERNATE SHAPE (✱✱✱)

(✱✱) The R3 bar and #5 bottom transverse slab bar in cantilever (P/S panels only) combination may be furnished as one bar as shown, at the contractor's option.

(✱✱✱) The R1 and R2 bar combination may be furnished as one bar as shown, at the contractor's option.

Note: Use same grade reinforcing steel in Barrier Curb as in slab. Splice length for #5 bars in Barrier Curb = 35".

16″ SAFETY BARRIER CURB WING REINFORCEMENT
NON-INTEGRAL END BENTS

Safety Barrier Bridge Curb

(✳) Spaced with #5-K4 bars.

(✳✳) Fit bar to follow transition face of curb.

Note: For details of Guard Rail Attachment, see Sec. 3.30 Page 4.6A-1.

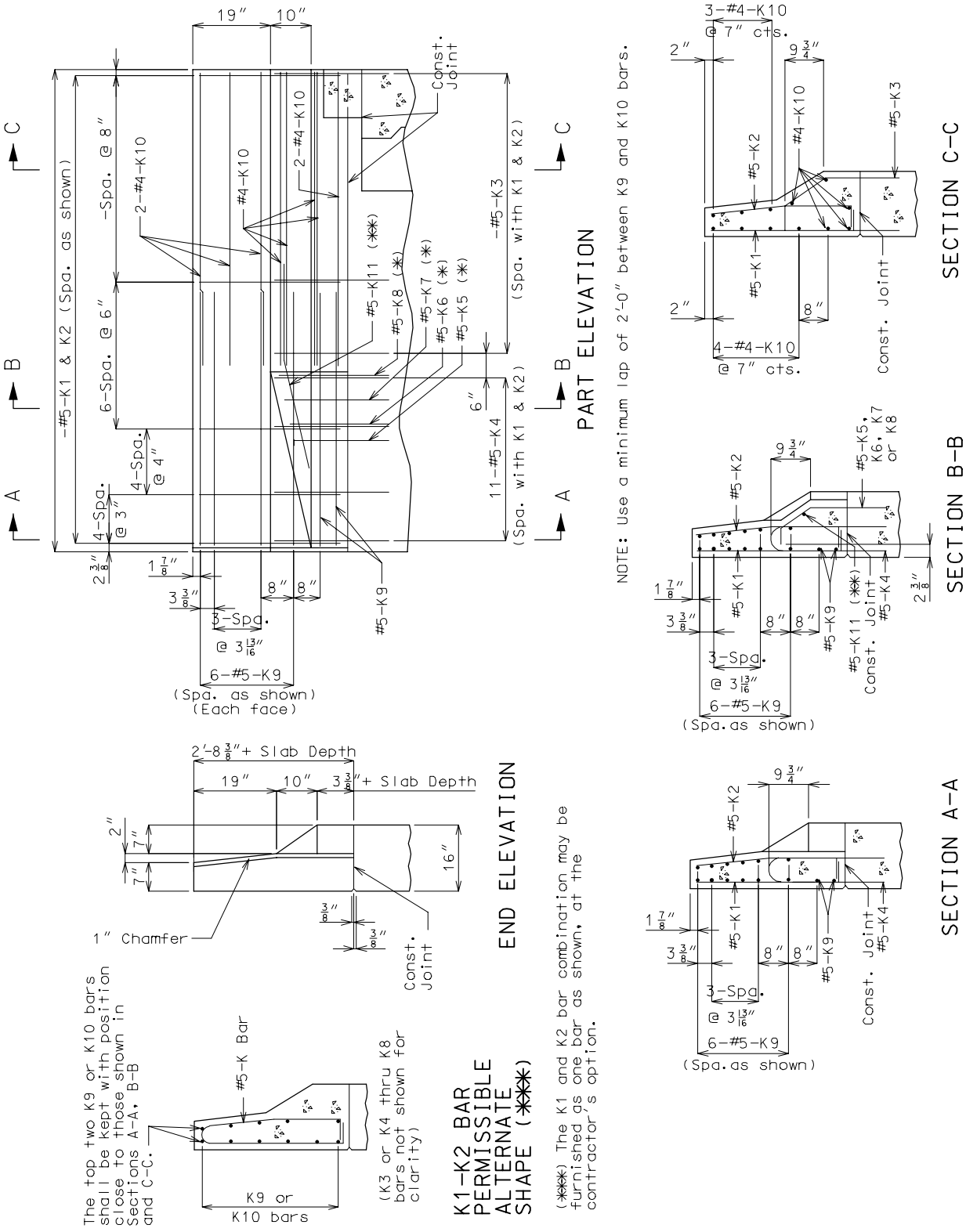

16″ SAFETY BARRIER CURB DIMENSIONS FOR BARBILL NON-INTEGRAL END BENTS (CONT.)

Safety Barrier Bridge Curb

All bars are epoxy coated.
All bars are stirrup bends except for K4, K9, K10 & K11.

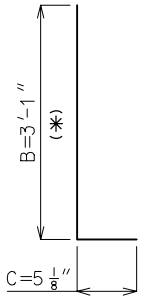

#5-K1
Shape 19

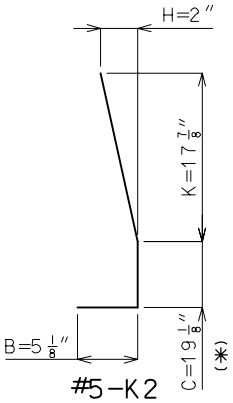

#5-K2
Shape 14

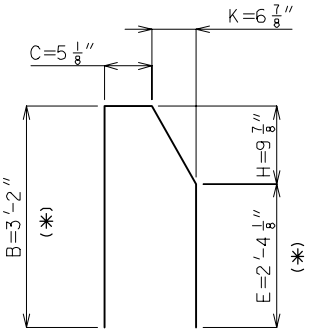

#5-K3
Shape 27

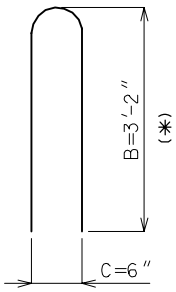

#5-K4
Shape 7

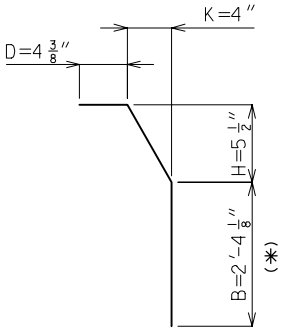

#5-K5
Shape 25

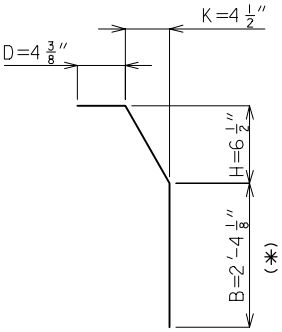

#5-K6
Shape 25

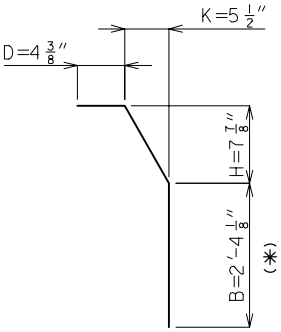

#5-K7
Shape 25

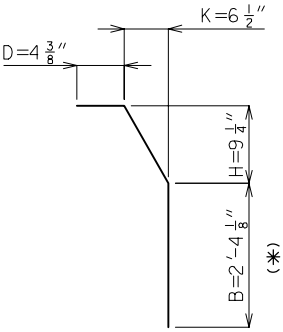

#5-K8
Shape 25

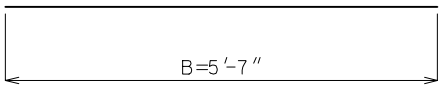

#5-K9 Shape 20

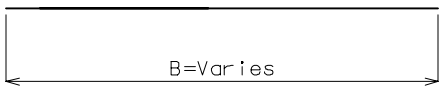

#4-K10 Shape 20

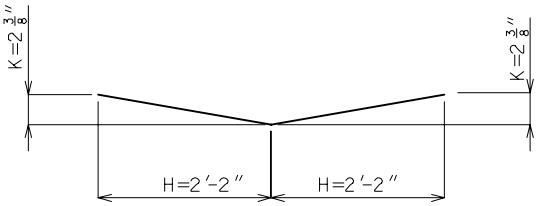

#5-K11 Shape 8

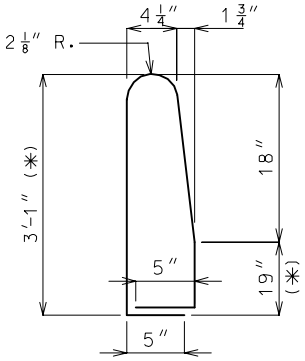

#5-K Bar Permissible Alternate Shape (✳✳)

(✳) Adjust leg for slab thickness other than 8-1/2″.

(✳✳) The K1 and K2 bar combination may be furnished as one bar as shown, at the contractor's option.

16″ SAFETY BARRIER CURB WING REINFORCEMENT
INTEGRAL END BENTS (INCLUDING DOUBLE-TEE)

Safety Barrier Bridge Curb

(✳) Spaced with #5-K4 bars.

(✳✳) Fit bar to follow transition face of curb.

(✳✳✳) On skewed structures, if end K3 bar does not meet the Min. 1-1/2″ clearance from front face of diaphragm, a K12 bar may be substituted.

Note: For details of Guard Rail Attachment, see Sec. 3.30 Page 4.6A-1.

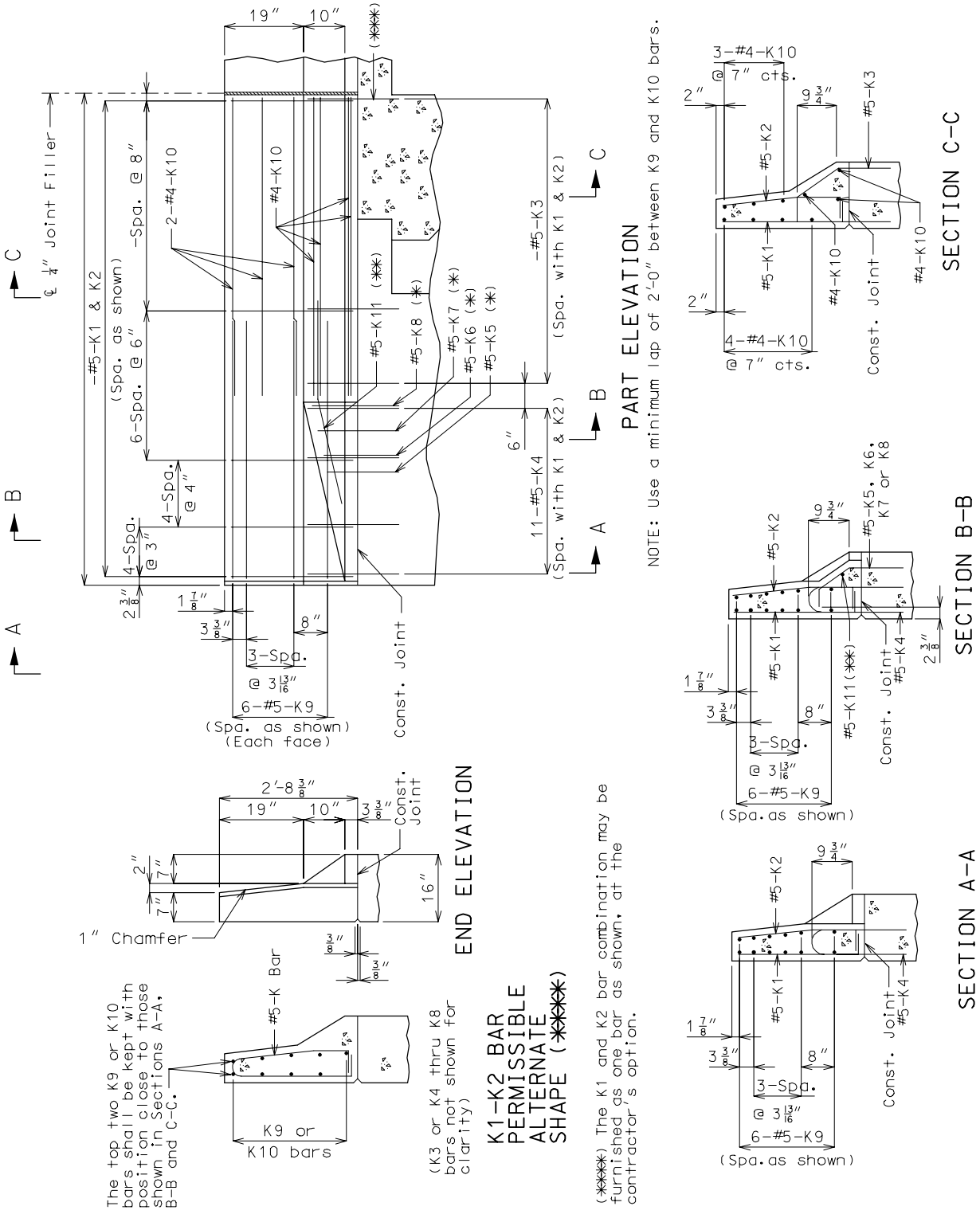

16″ SAFETY BARRIER CURB DIMENSIONS FOR BARBILL INTEGRAL END BENTS (INCLUDING DOUBLE-TEE) (CONT.)

Safety Barrier Bridge Curb

All bars are epoxy coated.
All bars are stirrup bends except for K4, K9, K10 & K11.

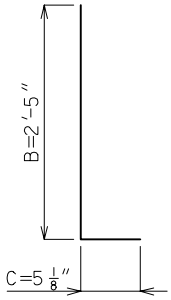

#5-K1
Shape 19

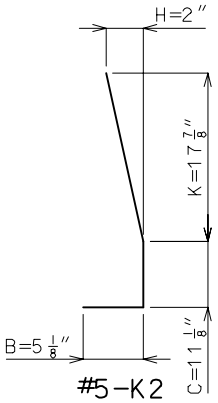

#5-K2
Shape 14

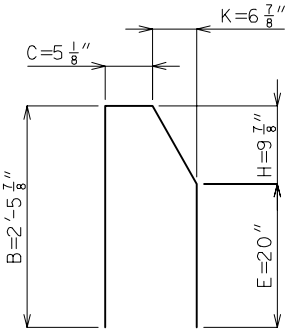

#5-K3
Shape 27

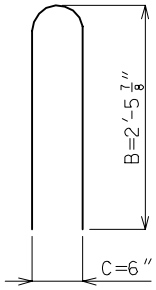

#5-K4
Shape 7

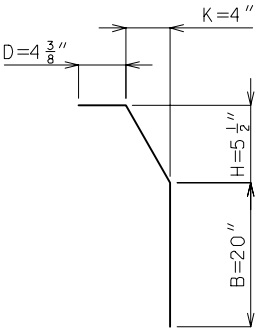

#5-K5
Shape 25

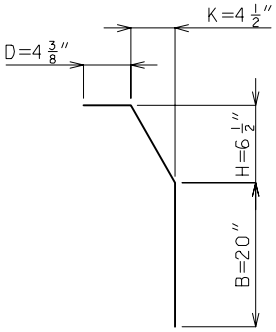

#5-K6
Shape 25

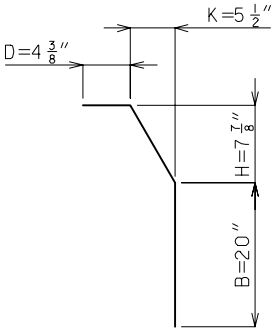

#5-K7
Shape 25

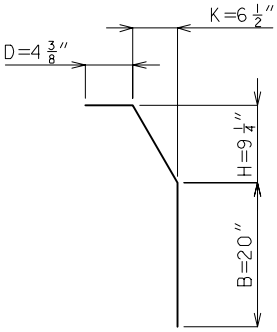

#5-K8
Shape 25

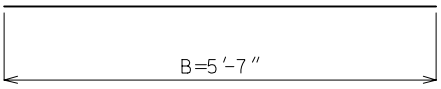

#5-K9 Shape 20

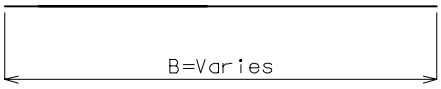

#4-K10 Shape 20

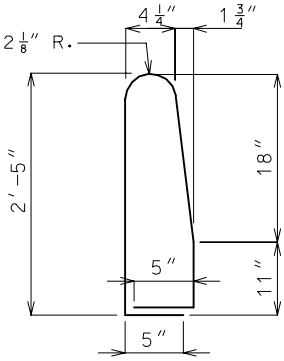

#5-K Bar Permissible Alternate Shape (✳)

(✳) The K1 and K2 bar combination may be furnished as one bar as shown, at the contractor's option.

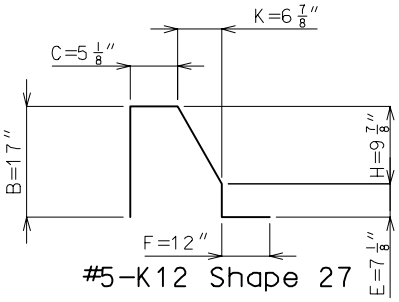

#5-K12 Shape 27

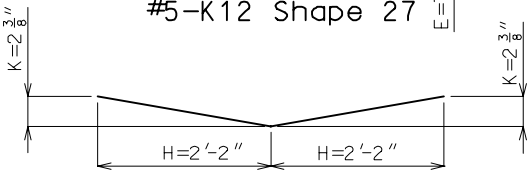

#5-K11 Shape 8

16″ SAFETY BARRIER CURB WING REINFORCEMENT
SEMI-DEEP ABUTMENTS

Safety Barrier Bridge Curb

(✳) Spaced with #5-K4 bars.

(✳✳) Fit bar to follow transition face of curb.

Note: For details of Guard Rail Attachment, see Sec. 3.30 Page 4.6A-1.

For K1 and K2 bar permissible alternate shape, see Sec. 3.30 Page 4.2A-3.

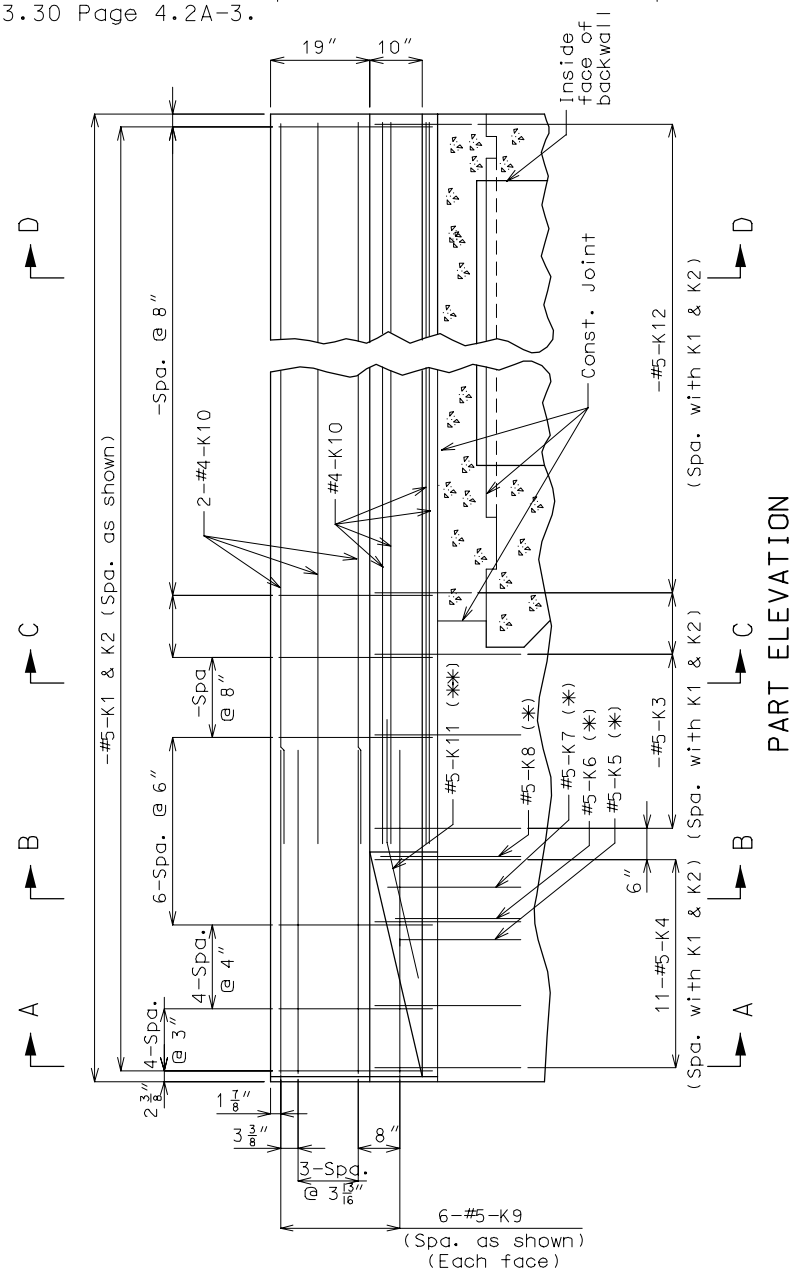

PART ELEVATION

NOTE: Use a minimum lap of 2′-0″ between K9 and K10 bars.

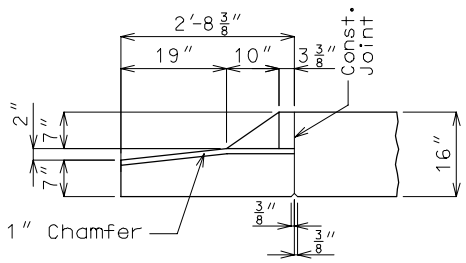

END ELEVATION

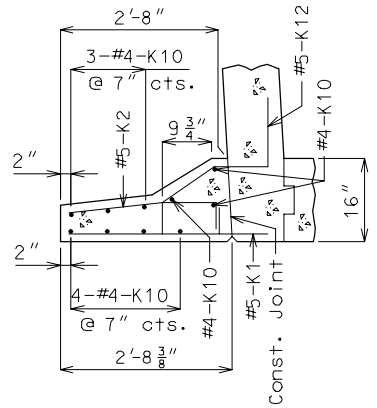

SECTION D-D

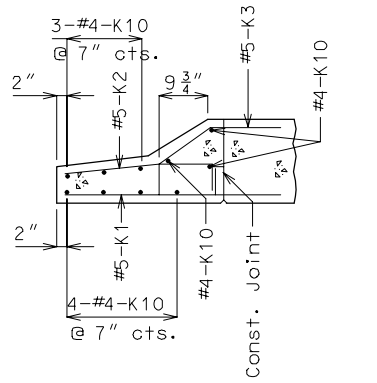

SECTION C-C

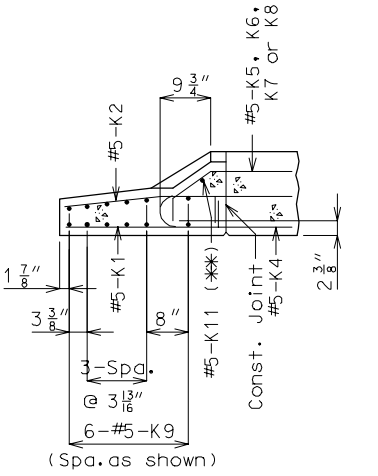

SECTION B-B

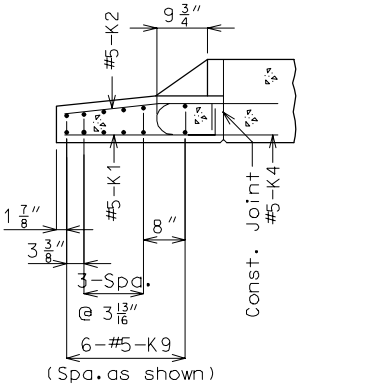

SECTION A-A

16″ SAFETY BARRIER CURB DIMENSIONS FOR BARBILL SEMI-DEEP ABUTMENTS (CONT.)

Safety Barrier Bridge Curb

All bars are epoxy coated.
All bars are stirrup bends except for K4, K9, K10 & K11.
For K1 and K2 bar permissible alternate shape, see Sec. 3.30 page 4.2A-4.

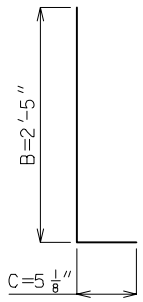

#5-K1
Shape 19

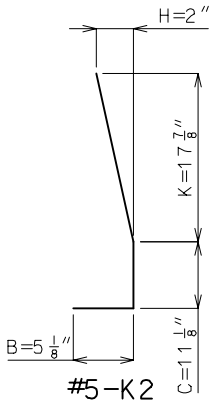

#5-K2
Shape 14

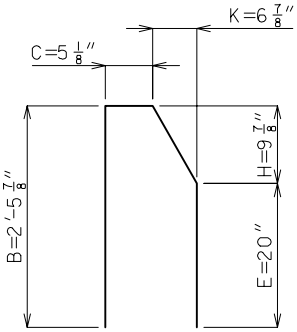

#5-K3
Shape 27

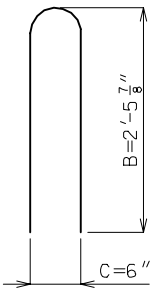

#5-K4
Shape 7

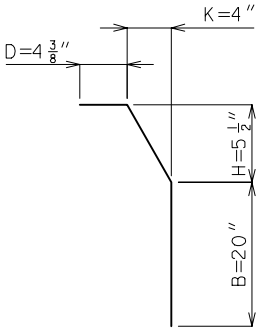

#5-K5
Shape 25

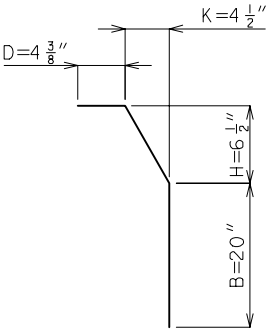

#5-K6
Shape 25

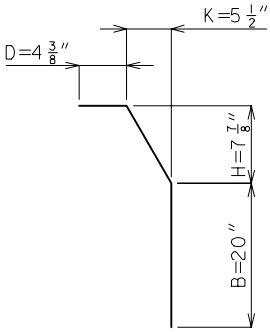

#5-K7
Shape 25

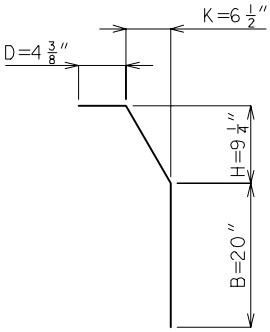

#5-K8
Shape 25

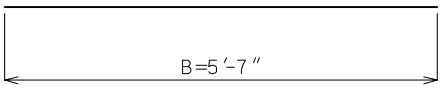

#5-K9
Shape 20

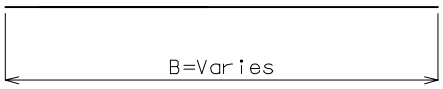

#4-K10
Shape 20

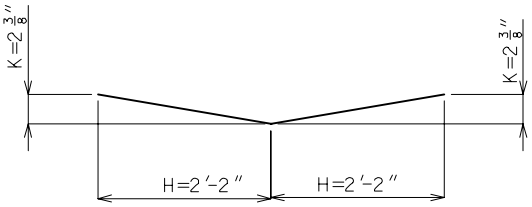

#5-K11
Shape 8

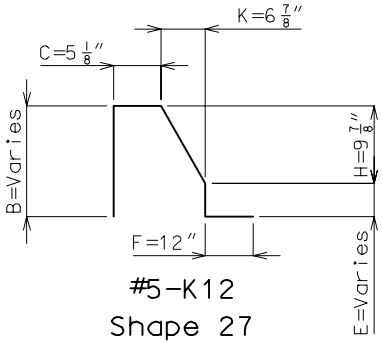

#5-K12
Shape 27

16″ SAFETY BARRIER CURB WING REINFORCEMENT
CONTINUOUS CONCRETE SLAB END BENTS

Safety Barrier Bridge Curb

(✳) Spaced with #5-K4 bars.

(✳✳) Fit bar to follow transition face of curb.

(✳✳✳) Clip #5-K4 bars as required to maintain minimum clearance at bottom of wing.

Note: For details of Guard Rail Attachment, see Sec. 3.30 Page 4.6A-1.

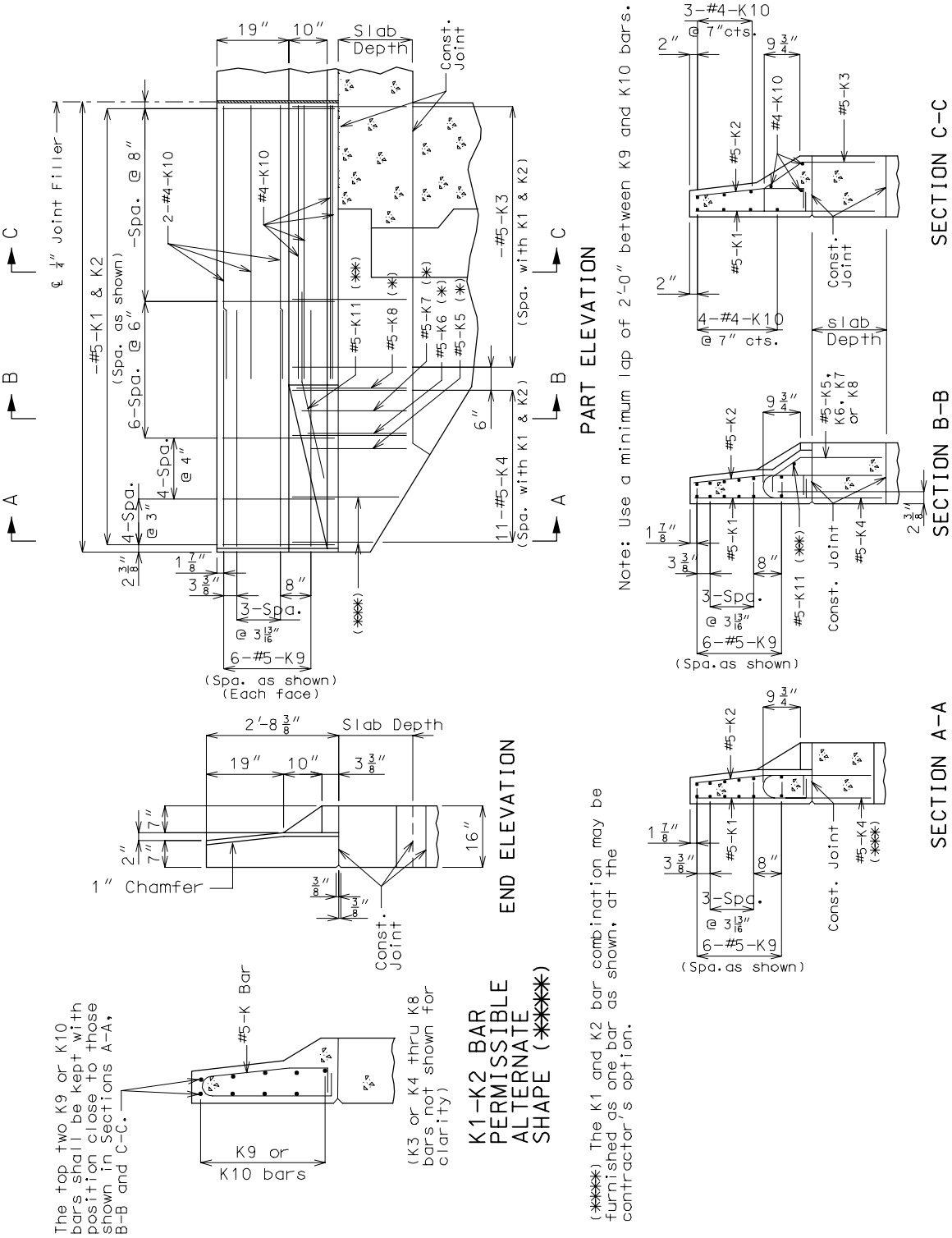

16″ SAFETY BARRIER CURB DIMENSIONS FOR BARBILL CONTINUOUS CONCRETE SLAB END BENTS (CONT.)

Safety Barrier Bridge Curb

All bars are epoxy coated.
All bars are stirrup bends except for K4, K9, K10 & K11.

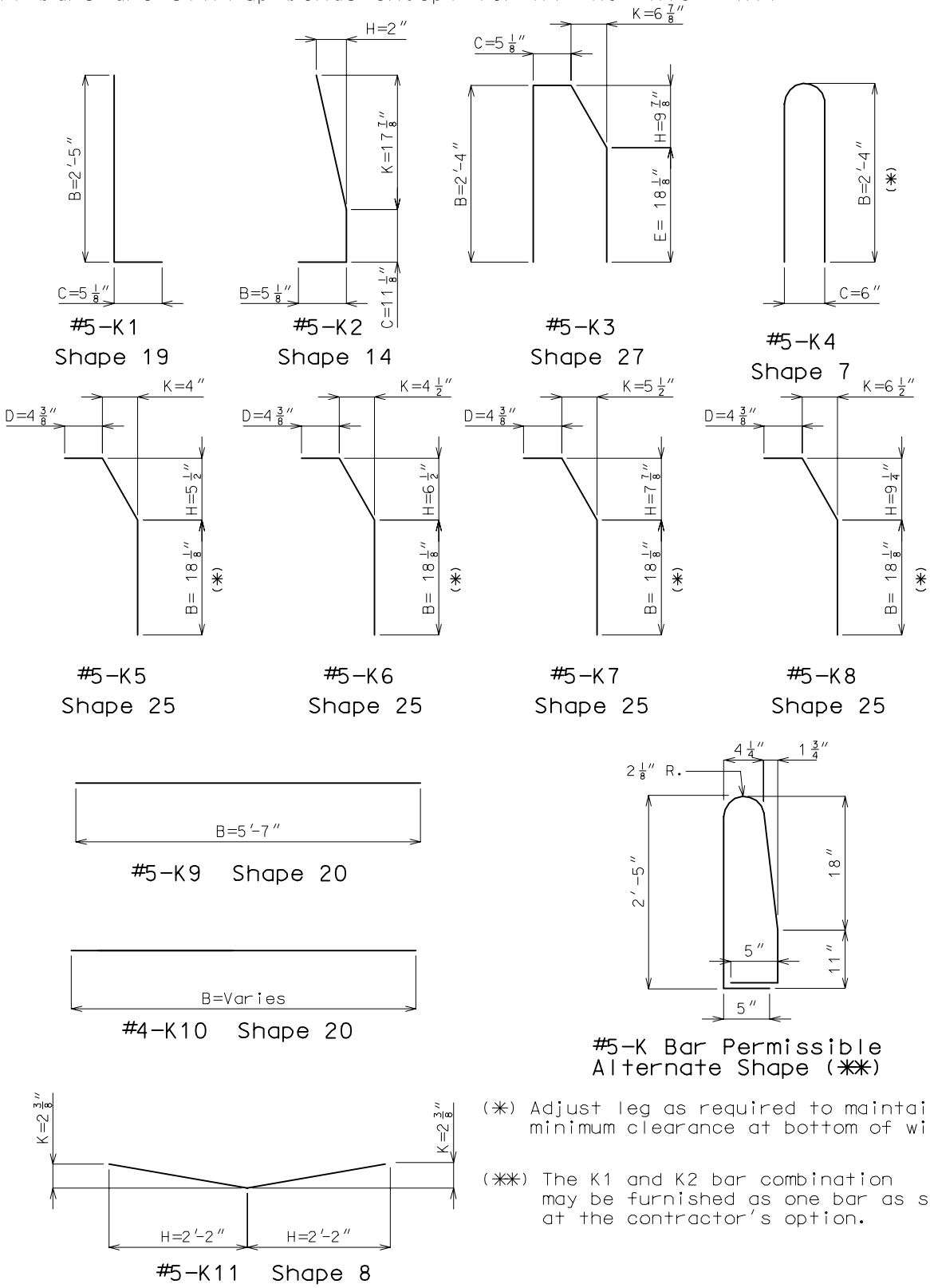

(✳) Adjust leg as required to maintain minimum clearance at bottom of wing.

(✳✳) The K1 and K2 bar combination may be furnished as one bar as shown, at the contractor's option.

REINFORCEMENT FOR OPTIONAL SLIP-FORM

Safety Barrier Bridge Curb

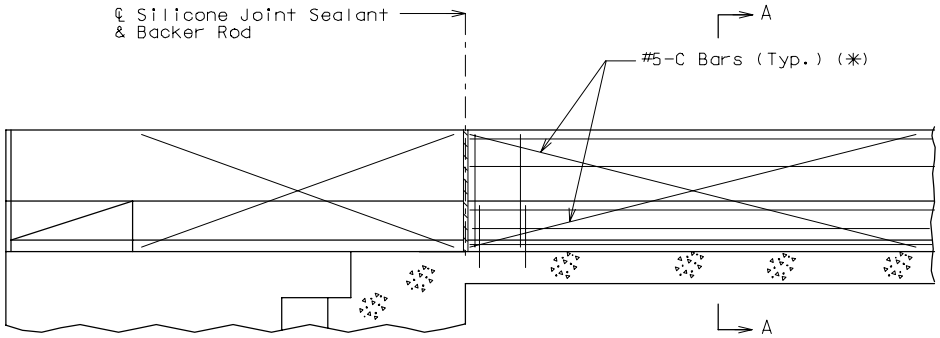

PART SECTION AT END BENT NEAR SAFETY BARRIER CURB (OPTIONAL SLIP-FORM BARRIER)

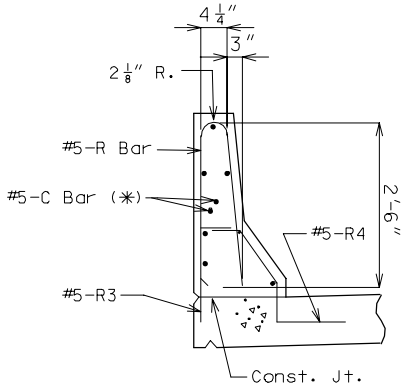

R-BAR PERMISSIBLE ALTERNATE SHAPE (✳✳)

(✳✳) The R1 and R2 bar combination may be furnished as one bar, as shown, at the contractor's option.
(All dimensions are out to out.)

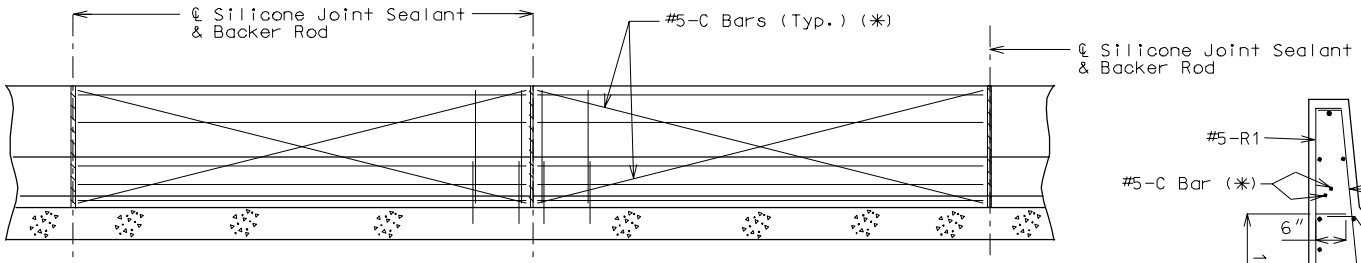

PART SECTION NEAR SAFETY BARRIER CURB (OPTIONAL SLIP-FORM BARRIER)

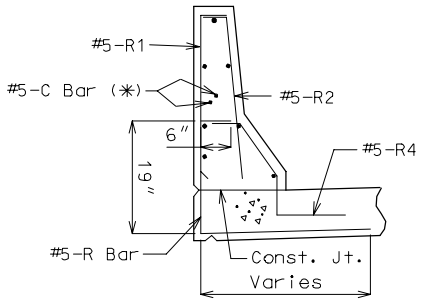

R-BAR PERMISSIBLE ALTERNATE SHAPE (✳✳✳)

(✳✳✳) The R3 bar and #5 bottom transverse slab bar in cantilever (P/S panels only) combination may be furnished as one bar as shown, at the contractor's option.

(✳) Each Side of Joint Location.

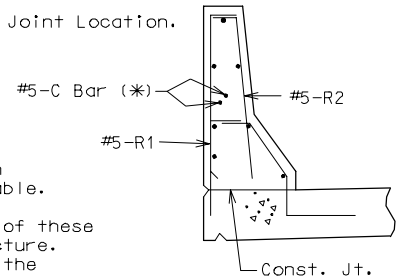

PART SECTION A-A

NOTE TO DETAILER:

Optional Slip-Form Safety Barrier Curb details shall be placed on all jobs (except Prestressed Double-Tee Structures) where applicable.

Add #5 cross bracing bars for Slip-Form option. Base the length of these bars on the shortest distance between joints throughout the structure. Show the C-Bars in the Bar List and note that these bars are for the Slip-Form option only.

SBC FOR WING WITH DETACHED WING WALL

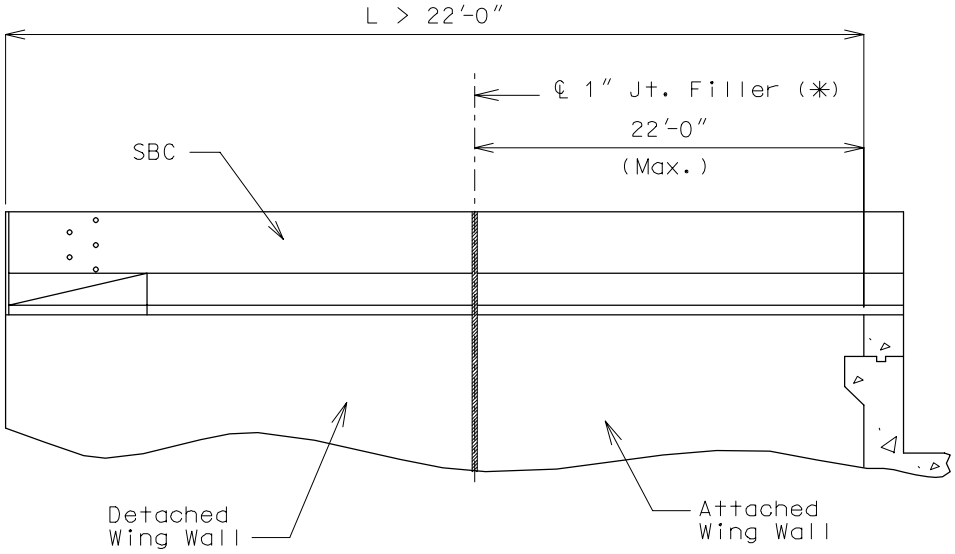

SBC ON NON-INTEGRAL END BENT (✳)

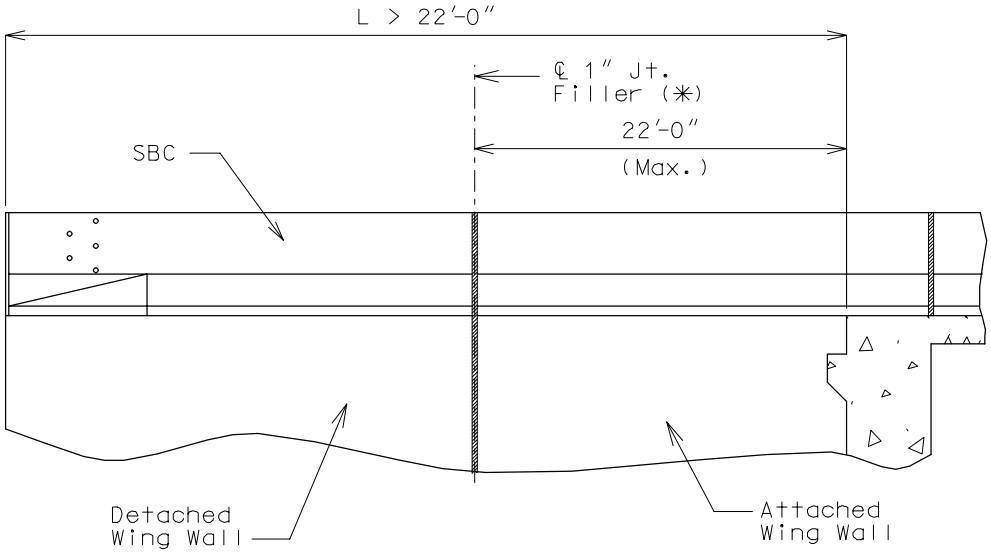

SBC ON INTEGRAL END BENT (✳)

(✳) Detached Wing Wall shown is for illustration purpose only.

If the detached wing wall has more than one section, see the Structural Project Manager for possible additional joints in the safety barrier curb (between sections).

DOUBLE-FACED MEDIAN BARRIER CURB REINFORCEMENT

Note: Use same grade reinforcing steel in barrier curb as in slab.
Splice length for #5-R bars in barrier curb = 35″.
Do not use this barrier curb over precast prestressed panels.

Note to detailer: Provide slip-form option for double faced median safety barrier curb. For slip-form option, additional #5 cross bracing bars shall be placed on both sides of all joints.

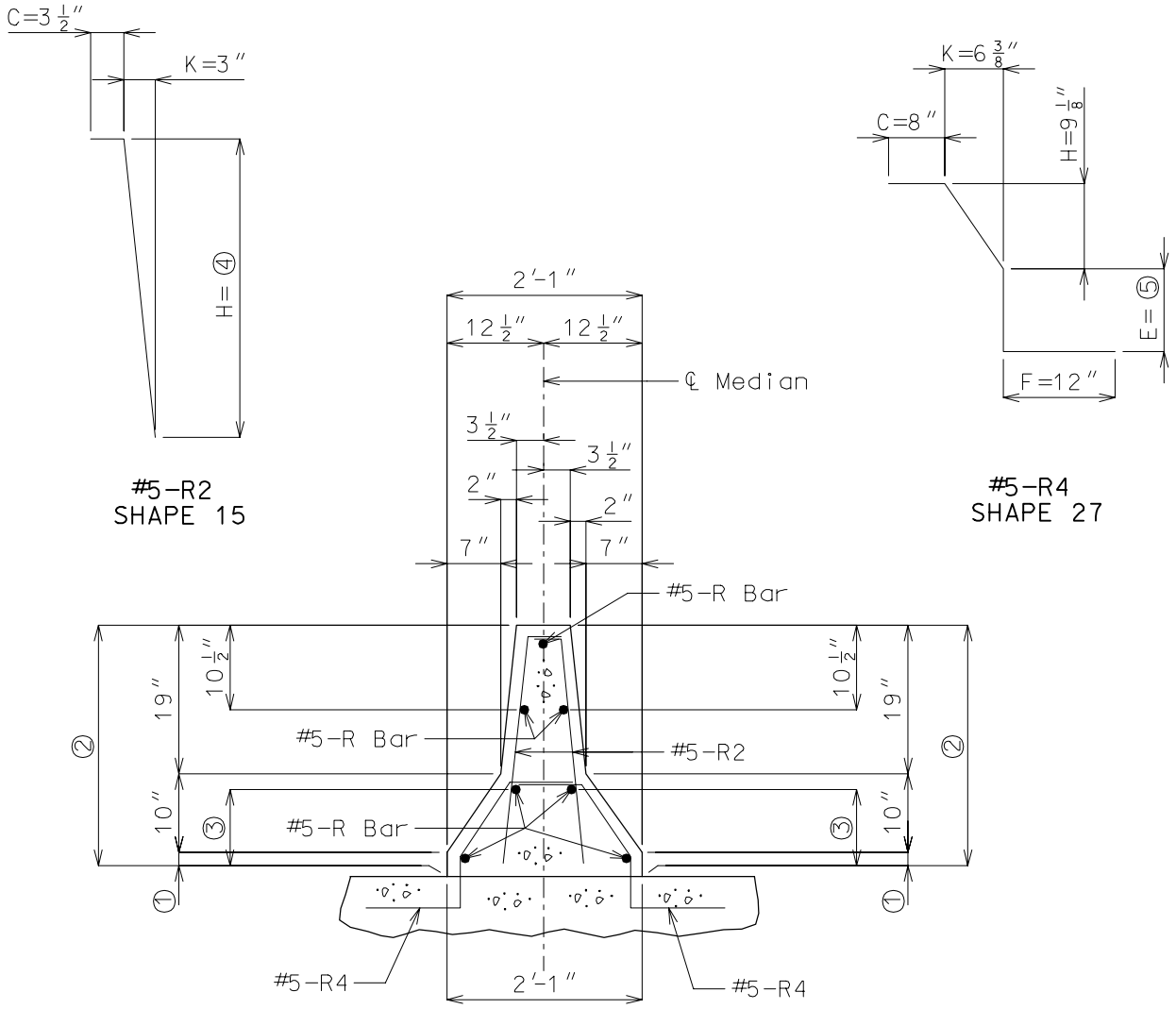

SECTION THRU DOUBLE FACED MEDIAN BARRIER CURB

TABLE OF VARIABLE DIMENSIONS				BAR DIMENSIONS	
Wearing Surface	①	②	③	④	⑤
No Wearing Surface	3″	2′-8″	11 1/2″	2′-5″	7″
1 3/4″	4 3/4″	2′-9 3/4″	13 1/4″	2′-6″	8 1/2″
2 1/4″	5 1/4″	2′-10 1/4″	13 3/4″	2′-7″	9″

DOUBLE-FACED MEDIAN BARRIER
CURB REINFORCEMENT (CONT.)

Safety Barrier Bridge Curb

Note: Use same grade reinforcing steel in barrier curb as in slab.
Splice length for #5-R bars in barrier curb = 35″.

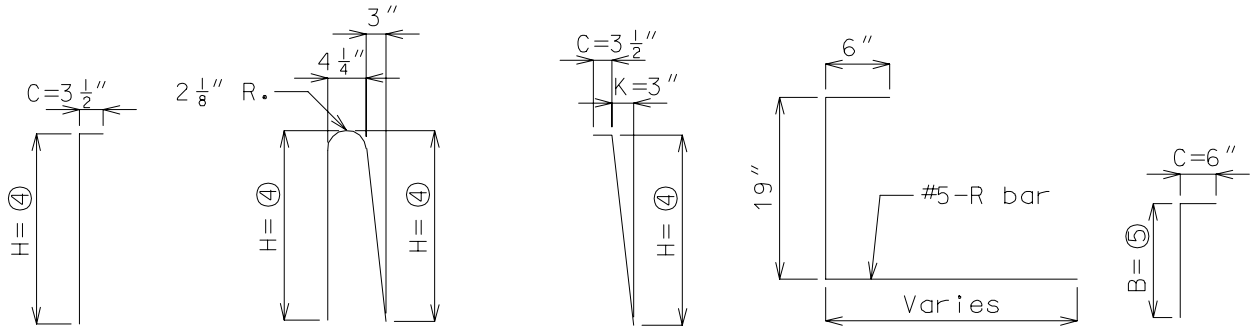

#5-R1
SHAPE 19

R-BAR PERMISSIBLE
ALTERNATE SHAPE (✳)

#5-R2
SHAPE 15

R-BAR PERMISSIBLE
ALTERNATE SHAPE (✳✳)

#5-R3
SHAPE 19

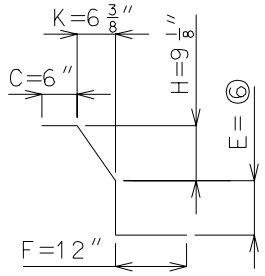

#5-R4
SHAPE 27

(✳) The R1 and R2 bar combination may be furnished as one bar, as shown, at the contractor's option. (All dimensions are out to out.)

(✳✳) The R3 bar and #5 bottom transverse slab bar in cantilever (P/S panels only) combination may be furnished as one bar, as shown, at the contractor's option. (Median with open joint only)

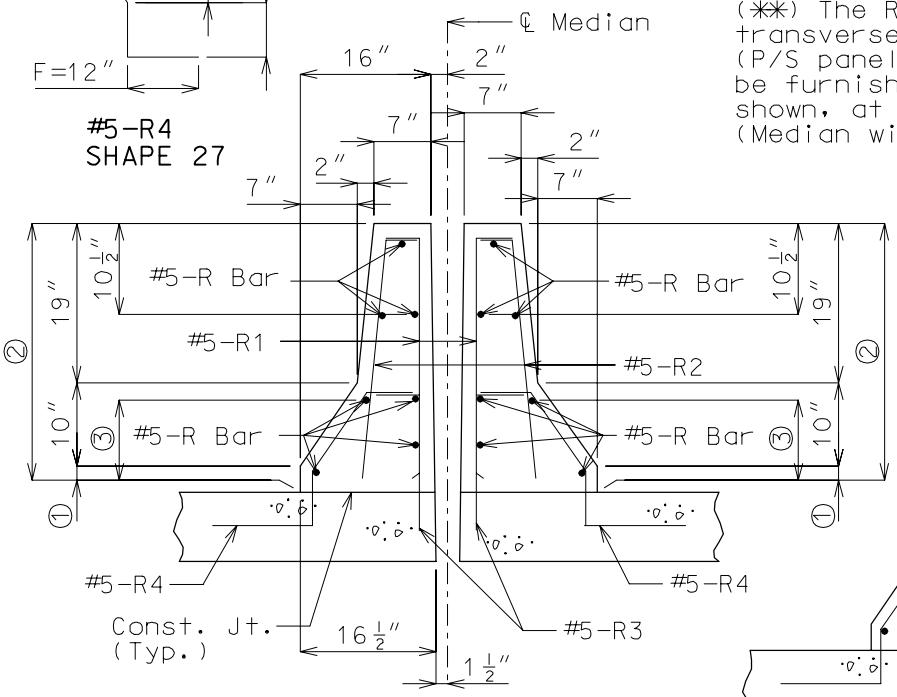

SECTION THRU MEDIAN WITH OPEN JOINT

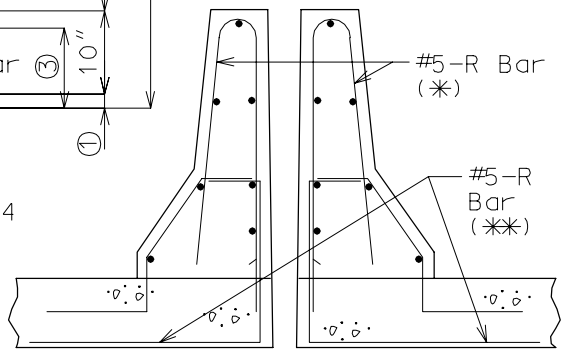

SECTION THRU MEDIAN WITH OPEN
JOINT SHOWING R-BAR ALTERNATE SHAPE

TABLE OF VARIABLE DIMENSIONS				BAR DIMENSIONS		
Wearing Surface	①	②	③	④	⑤	⑥
No Wearing Surface	3″	2′-8″	11 1/2″	2′-6″	17″	7″
1 3/4″	4 3/4″	2′-9 3/4″	13 1/4″	2′-7 1/2″	18 1/2″	8 1/2″
2 1/4″	5 1/4″	2′-10 1/4″	13 3/4″	2′-8″	19″	9″

DOUBLE-FACED MEDIAN BARRIER CURB
DELINEATOR DETAILS

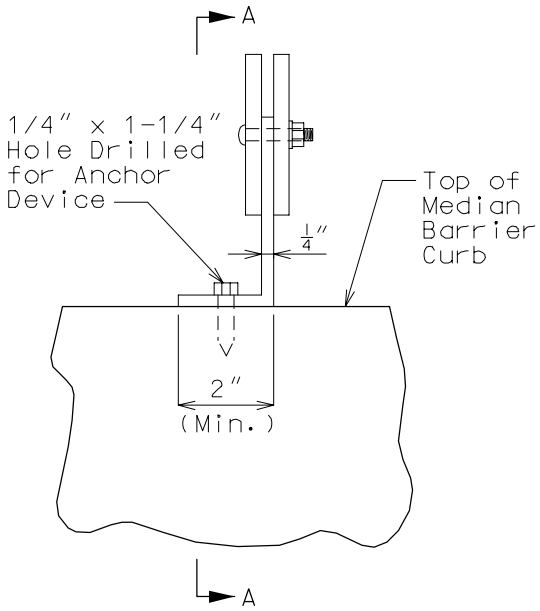

PART ELEVATION

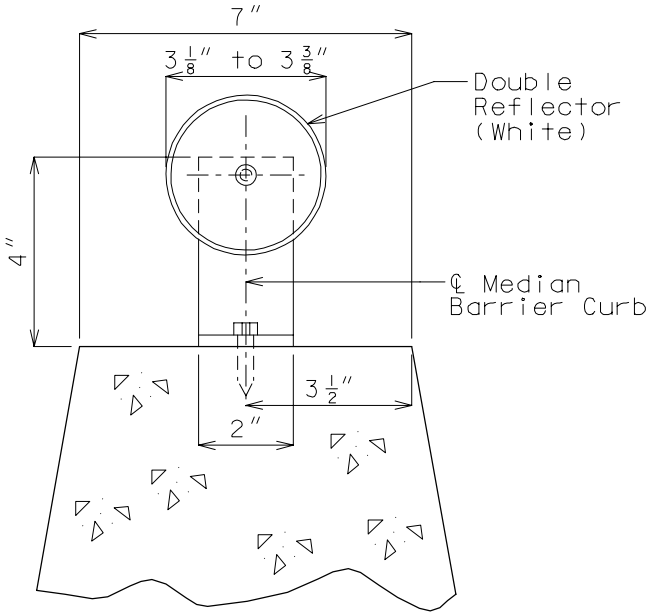

SECTION A-A

Delineator Notes:

All materials for supporting delineators shall be aluminum except anchor devices.
If anchor device material is other than aluminum, insulation shall be provided between metals to prevent passage of electric current.
Other attaching methods may be used if approved by the Structural Project Manager.
No direct payment is made for delineators.

Delineator Spacing:

0° to 2°45′ Curve = 100′-0″ Spacing
3° to 6° Curve = 60′-0″ Spacing

CONCRETE MEDIANS

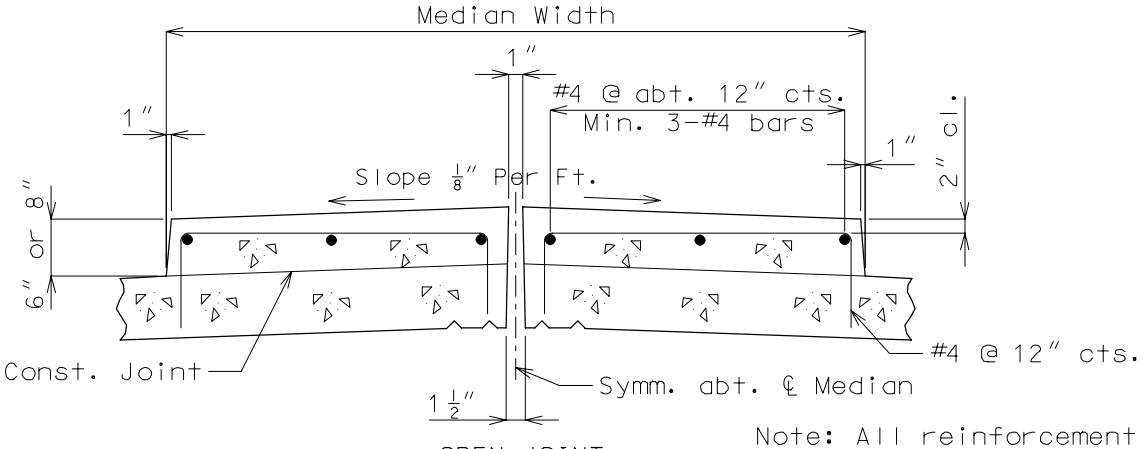

OPEN JOINT

Note: All reinforcement shown shall be epoxy coated.

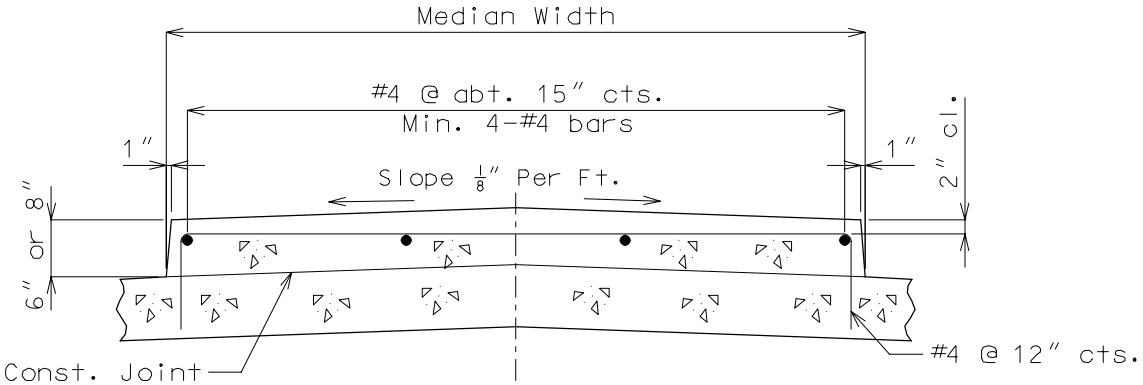

BARRIER CLASS (NO JOINT)
(Similar to Design Division's Type A Curb)

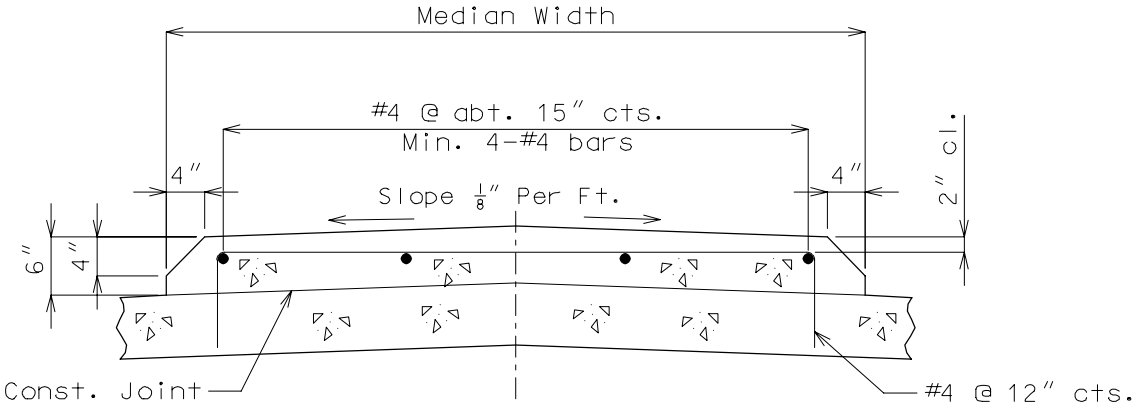

MOUNTABLE CLASS

Details shown are very general. Consult Design Layout for specific details for each individual structure.

CONCRETE MEDIANS (CONT.)
PERMISSIBLE ALTERNATE MEDIAN DETAILS

BENT BAR

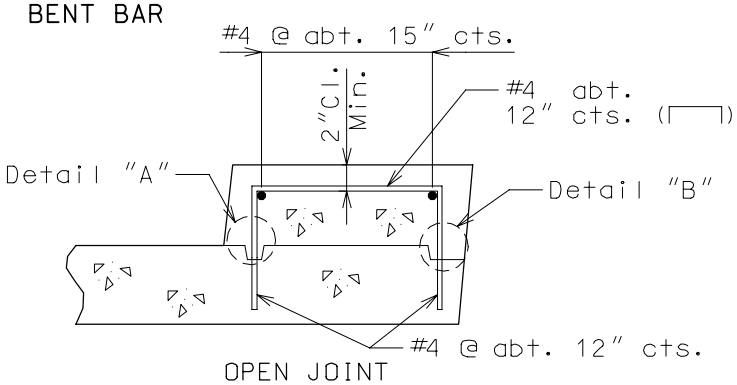

OPEN JOINT

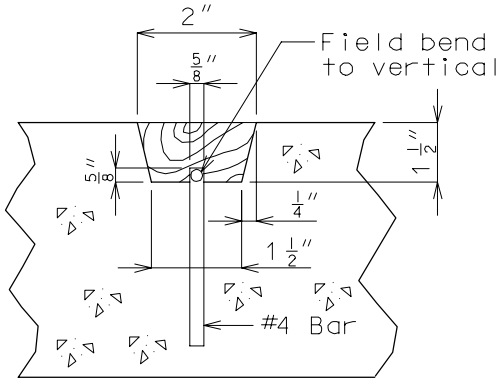

DETAIL "A"

Note: All reinforcement shown shall be epoxy coated.

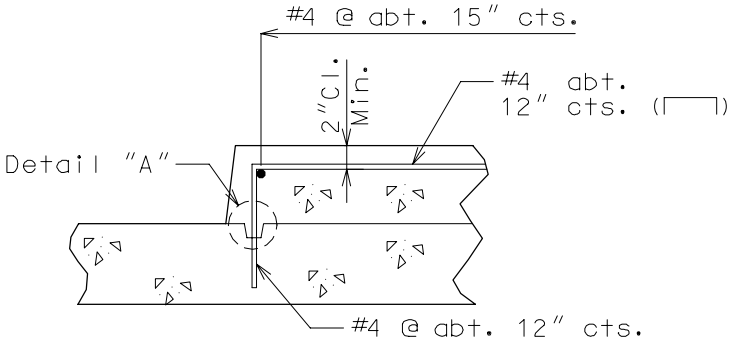

BARRIER CLASS (NO JOINT)
(Mountable Class similar but not shown)

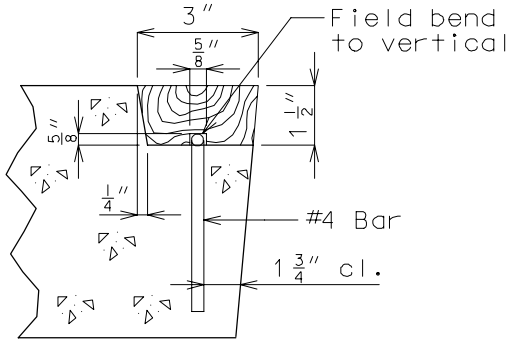

DETAIL "B"

Add note to plans:

No additional payment will be allowed for the usage of either alternate anchoring systems.

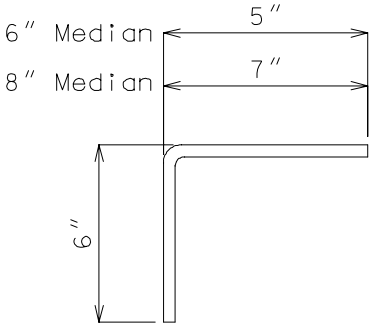

FIELD BEND BAR

RESIN ANCHOR

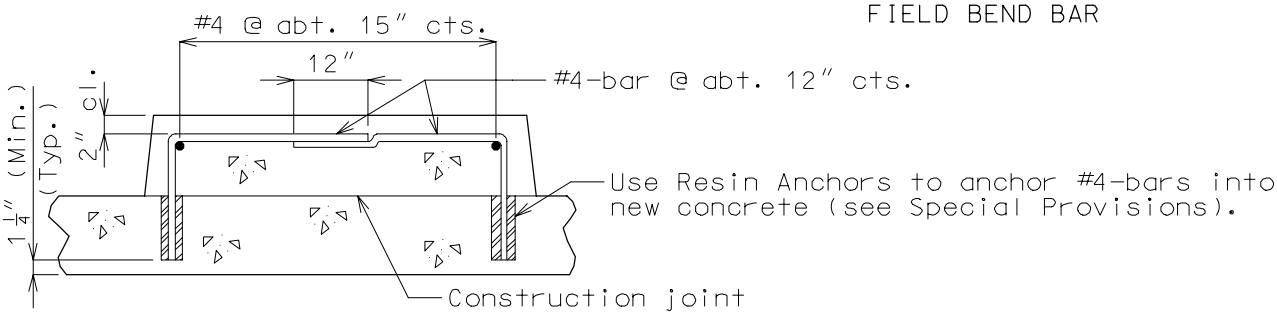

OPTIONAL ANCHORING SYSTEM

GUARD RAIL ATTACHMENT DETAIL
16″ SAFETY BARRIER CURB

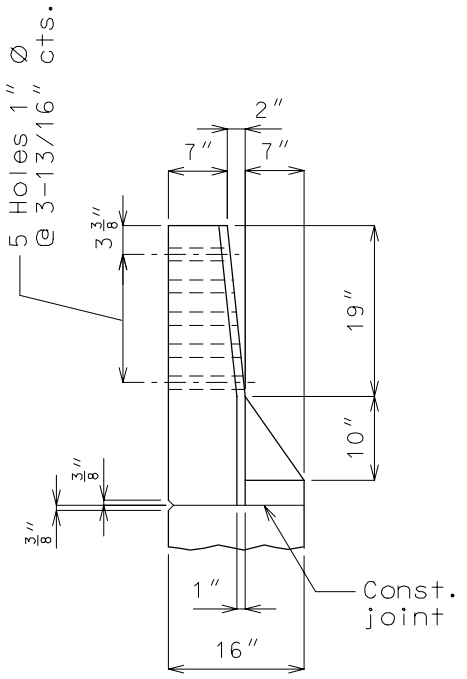

PART ELEVATION A-A

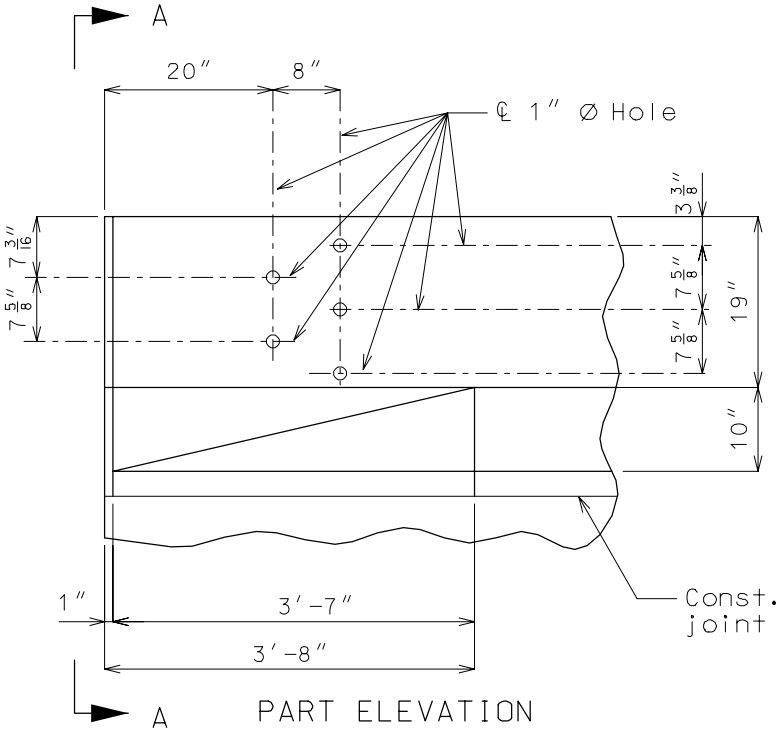

PART ELEVATION

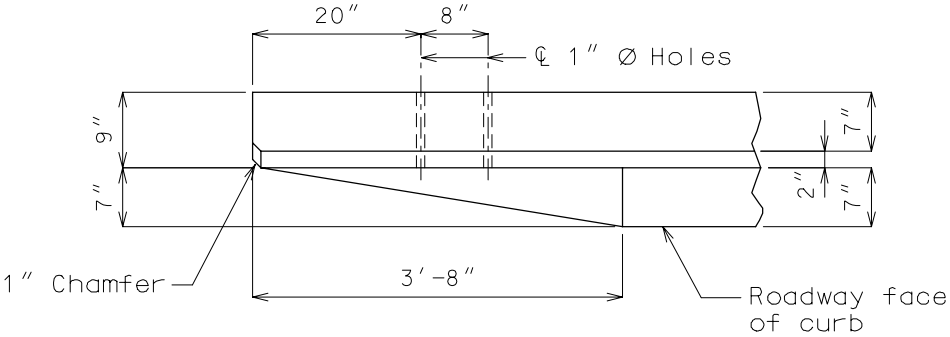

PART PLAN

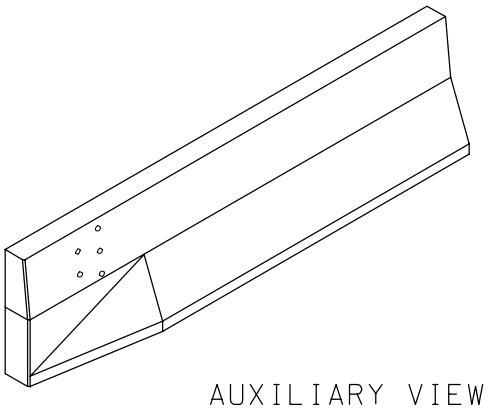

AUXILIARY VIEW

4.7 Slab Drains

Slab Drain Type

Slab drains shall be 8" x 4" x 1/4" steel tubing whenever possible.

Alignment

All standard crown roadways shall have the 8" x 4" steel tubing placed with the 8" side perpendicular to the curb whenever possible.
All super-elevated roadways shall have the 8" x 4" steel tubing placed with the 8" side parallel to the curb.

Slab Drain Spacing

Slab drain spacing shall be designed according to the 1986 FHWA report "Bridge Deck Drainage Guidelines" along with information acquired from the 1995 University of Missouri Rolla report "Scupper Interception Efficiency."

General Requirements for Location and Spacing of Slab Drains

1) Drains shall be spaced no closer than 8 ft. center to center.
2) Drains shall be omitted on high side of super-elevation bridges.
3) Drains shall not be located over unprotected fill. If drains are needed, fill should be protected with use of; rock blanket with surface grout, rock blanket with type 3 qeotextile, or concrete slope protection.
4) Drains shall be omitted on all grade separations and rail overpasses except when located over concrete slope protection or as noted on Design Layout.
5) For Bridges with slopes less than 0.5%, space drains at about 10 ft. centers where possible.
6) Use consistent spacing for drains when possible.
7) Drains shall be placed at least 5 feet from the face of substructure beam.
8) Drains shall be dimensioned along centerline of exterior girder to facilitate placement of coil inserts or holes in girders.
9) For all sag vertical curves, locate the points at which the slope is 0.5% on either side of the low point, and space drains on 10 ft. centers between them where possible. Use equations in this section for spacing drains for the remainder of the curve.
10) If location restrictions apply, the same number of drains as calculated by equations in this section shall be placed on the bridge when possible. The designer is responsible for relocating drains.
11) The length of the approach slab shall be included in the length of the bridge for spacing computations. Do not place slab drains on the approach slab.

Calculation of spacing to first slab drain

The first slab drain either side from the high point of the bridge shall be calculated according the following equation. If the value of L_1 is greater than the bridge length, slab drains are not required.

FHWA equation (4)

$$L_1 = \frac{24{,}393.6(S_x)^{1.67}(S)^{0.5}(T)^{2.67}}{CnIW}$$

- L_1 = Distance from high point to first slab drain (ft.)
- S_X = Cross slope of slab (ft./ft.)
- S = Longitudinal slope of bridge (ft./ft.). For vertical curve bridges, "S" is the longitudinal slope at the location of the drain being analyzed. A linear approximation can be used to simplify the calculations.

- T = Design spread (ft.). The spread is the width of gutter flow. The spread for any bridge with a 3 ft. or more shoulder width should be taken as 6 ft. If the shoulder width is less than 3 ft., the spread shall be the shoulder width plus 3 ft.
- C = Ratio of impervious to pervious drain area. On a bridge deck, most rainfall runs off, except at the beginning of a storm when rain wets the bridge deck and fills small depression areas. Design of slab drain spacing assumes the bridge deck is wetted, therefore a " C " value of 1.0 is recommended.
- n = Manning's coefficient of friction. For typical pavements, "n" equal to 0.016 is used.
- I = Design rainfall intensity (in./hr.). The "Rational Method" as outlined in "Hydraulic Engineering Circular-12, (HEC-12)" with a 25 year frequency for a 5 minute time period shall be used to calculate the design rainfall. Missouri's intensity varies from 8.00 in./hr. to 8.50 in./hr. for this frequency and time period. Therefore an "I" value of 8.50 in./hr. is recommended to determine slab drain spacing.
- W = Width of deck drainage area (ft.). For crowned roadways use distance from top of crown to curb face and for super-elevated bridges use distance from face of curb to face of curb.

Calculation of Additional Slab Drain Spacing

Once the first slab drain has been located, slab drain efficiency "Es" is required to determine the location of additional slab drains. Given the efficiency of the slab drain, the amount of flow intercepted by the first slab drain $(q)_i$ is determined by $(q)_i = Es(Q_T)_i$ where (Q_T) is the flow at which the gutter is filled to the design spread (T) at slab drain #1 and is determined by the equation $Q_T = \frac{CIWL}{43{,}560}$ (cu. ft./second)

Interception flow decreases the flow in the gutter by q (intercepted). This flow must be replaced before another slab drain is required. Flow in the gutter at the second slab drain is given by the equation

$$(Q_T)_{i+1} = \frac{CIW(L)_{i+1}}{43{,}560} - \sum_{j=1}^{i}(q)_j \quad \text{(cu. ft./second)}$$

Another slab drain is located when runoff minus intercepted flow equals flow in the gutter filled to the design spread (T) at length $(L)_{i+1}$ where $(L)_{i+1}$ is the total length of bridge to $(\text{slab drain})_{i+1}$.

For tangent sections the additional theoretical slab drain spacing are constant. For vertical curve sections the theoretical slab drain spacing are variable and require the designer to repeat the process till the end of the bridge. Theoretical spacing should be revised to consider ease of spacing.

Calculation of Slab Drain Interception Efficiency

Slab drain interception efficiency (E_S) is that fraction of gutter flow removed by the slab drain. FHWA's report called "Bridge Deck Drainage Guidelines" gives an approximation for (E_S) for small grates and low gutter velocities, $E_S = 1-[1-(w/T)]^{2.67}$ which is a <u>fraction</u> of triangular gutter flow passing over a slab drain located next to the curb.

- w = width of slab drain normal to the flow (ft).
- T = Design spread.

In UMR's report "Scupper Interception Efficiency" imperical data is used to determine a more precise efficiency coefficient. They state that the slab drain efficiency (E_S) can be closely approximated by the equation $E_S=aS^b$, where E_S is a percent (%) and must be divided by 100 for use in the flow equations.

- S = Longitudinal slope of bridge at slab drain location.
- a and b = Imperical coefficients dependent on the bridge cross-slope. The following tables can be used to determine a and b.

The UMR method shall be used whenever possible because of its ability to account for increased velocities with increased slopes in its efficiency coefficient. When the design spread "T" is other than 6 feet, the FHWA method must be used.

Slab Drain with 8" dimension perpendicular to face of curb. T = 6 ft.

Cross-Slope	a	b
0.010	14.580	-0.180
0.016	6.670	-0.340
0.020	3.550	-0.450
0.030	2.080	-0.500
0.040	2.080	-0.440
0.050	3.680	-0.280
0.060	5.510	-0.140
0.070	4.550	-0.160
0.080	5.420	-0.110

Slab Drain with 8" dimension parallel to face of curb. T = 6 ft.

Cross-Slope	a	b
0.010	9.170	-0.230
0.016	7.060	-0.280
0.020	5.620	-0.320
0.030	4.670	-0.320
0.040	3.060	-0.370
0.050	3.660	-0.300
0.060	4.560	-0.210
0.070	5.500	-0.130
0.080	5.420	-0.110

Safety Barrier Bridge Curb

SLAB DRAINS (CONT.)
STEEL STRUCTURE - NO WEARING SURFACE

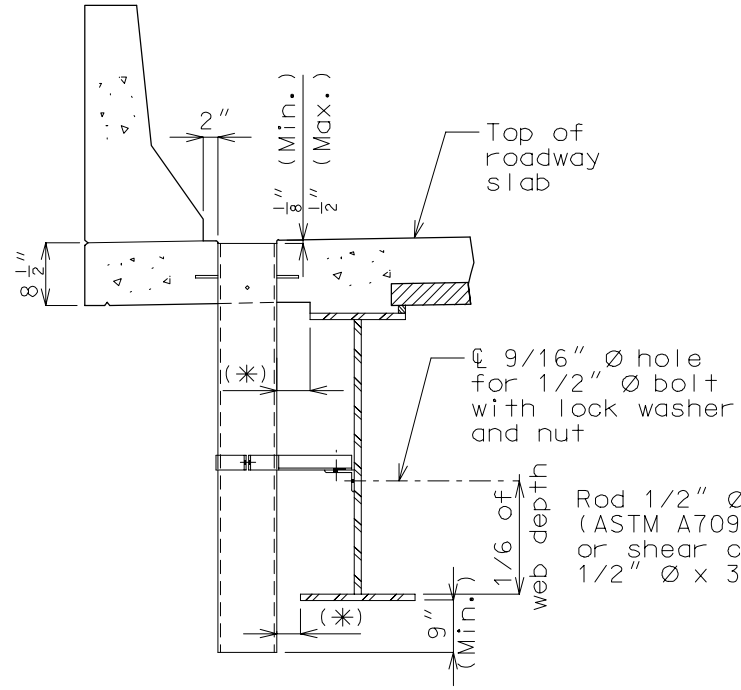

PART SECTION OF SLAB AT DRAIN

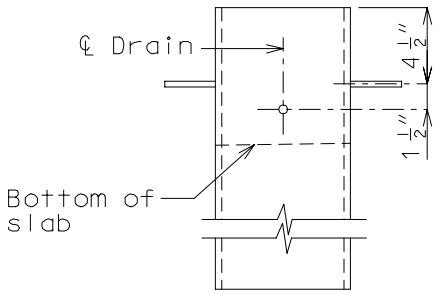

ELEVATION OF DRAIN

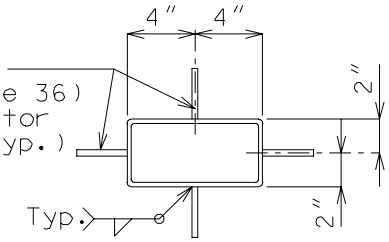

PLAN OF DRAIN

(✳) If dimension is less than 1″, drains shall be placed parallel to roadway. Otherwise, place drains transverse to roadway.

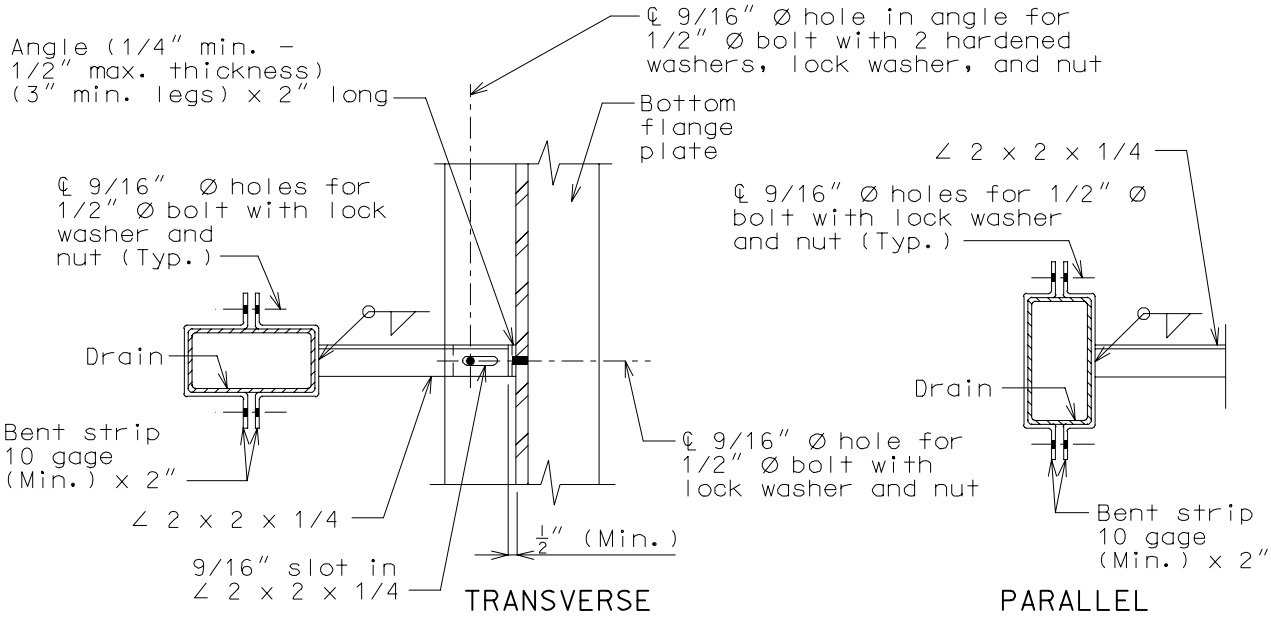

PART PLANS SHOWING BRACKET ASSEMBLY

Safety Barrier Bridge Curb

SLAB DRAINS (CONT.)
CONTINUOUS CONCRETE STRUCTURE - NO WEARING SURFACE

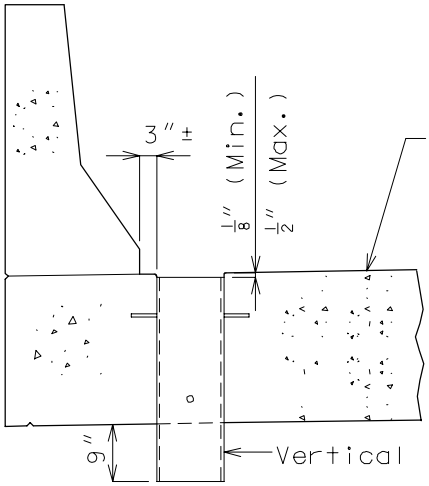

PART SECTION OF SLAB AT DRAIN

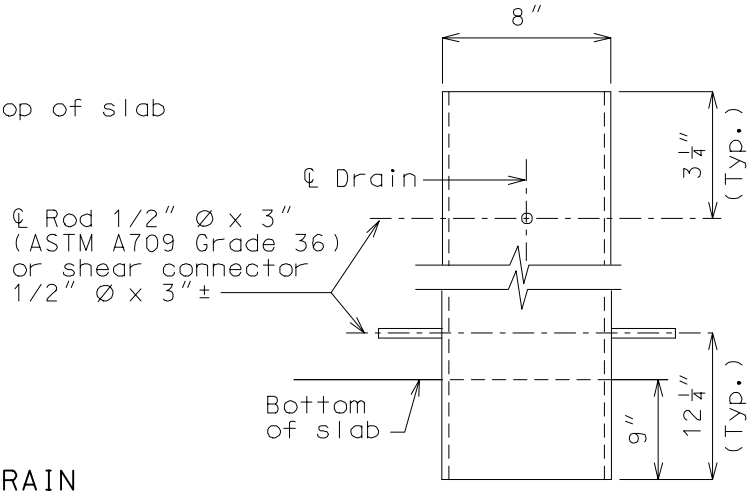

ELEVATION OF DRAIN

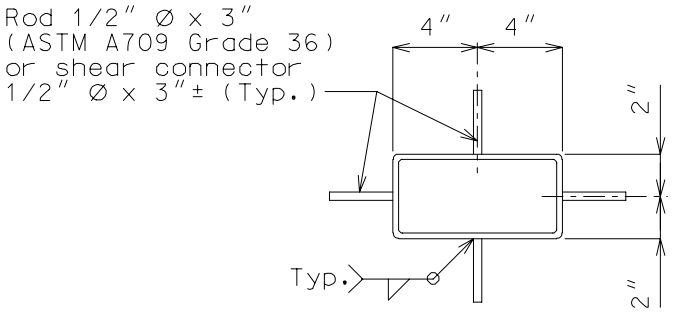

PLAN OF DRAIN

Notes:

Drains shall be placed a minimum of 6″ from leg of all drop panel reinforcing bars.

(✳) Also see page 4.7-1 of this section and check with Structural Project Manager.

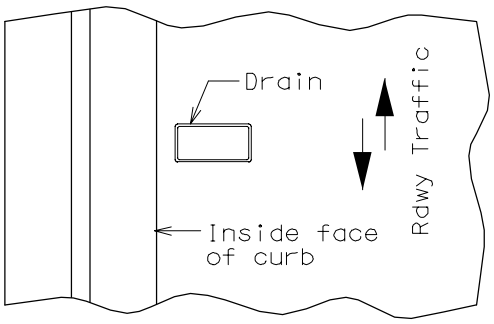

SOLID SLAB BRIDGE

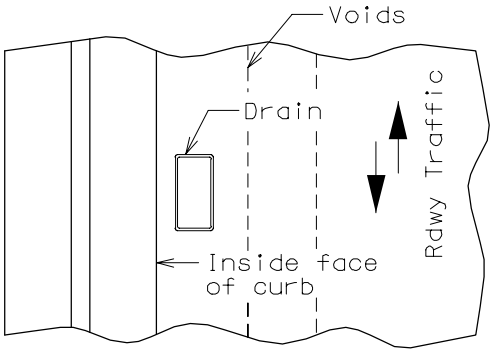

VOIDED SLAB BRIDGE

PART PLAN OF SLAB AT DRAIN (✳)

Safety Barrier Bridge Curb

SLAB DRAINS (CONT.)
PRESTRESSED "I" GIRDER STRUCTURES
NO WEARING SURFACE

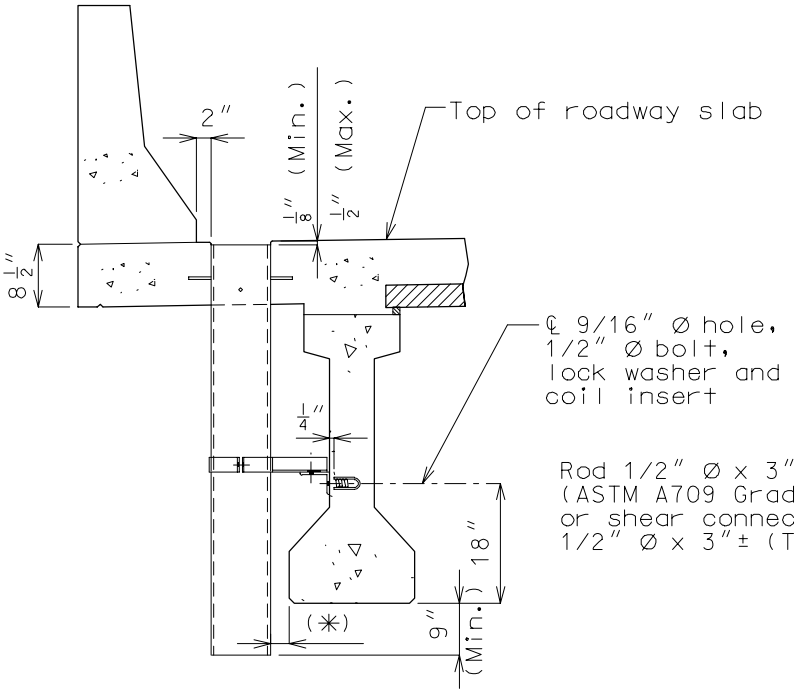

PART SECTION OF SLAB AT DRAIN

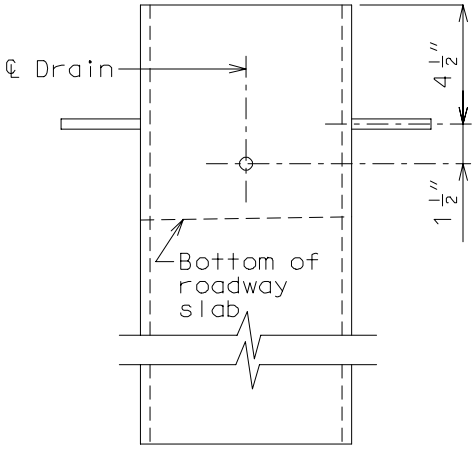

ELEVATION OF DRAIN

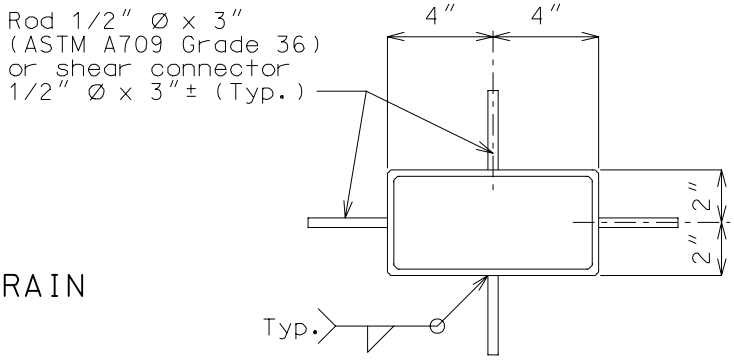

PLAN OF DRAIN

(✳) If dimension is less than 1", drains shall be placed parallel to roadway. Otherwise, place drains transverse to roadway.

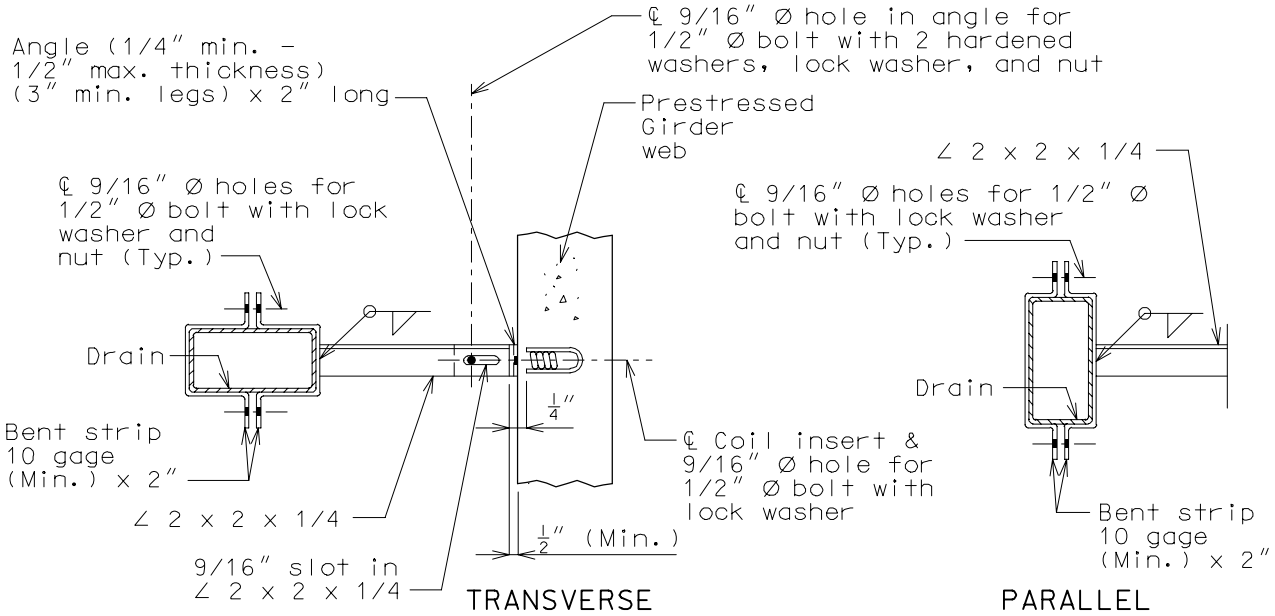

PART PLANS SHOWING BRACKET ASSEMBLY

Safety Barrier Bridge Curb

SLAB DRAINS (CONT.)
PRESTRESSED DOUBLE-TEE STRUCTURES
NO WEARING SURFACE

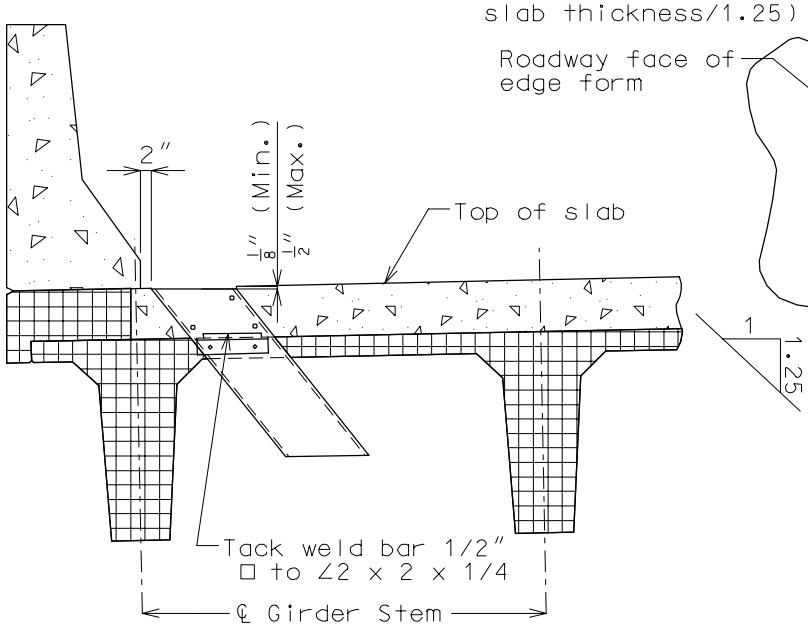

PART SECTION OF SLAB AT DRAIN

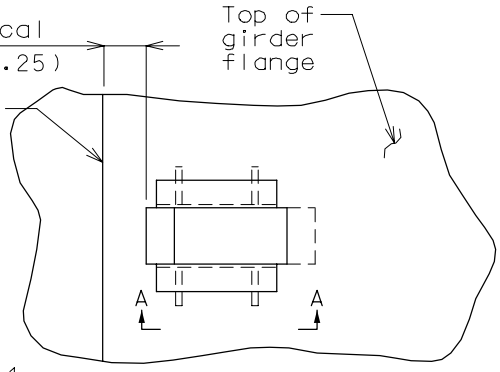

PART PLAN OF DRAIN BLOCKOUT

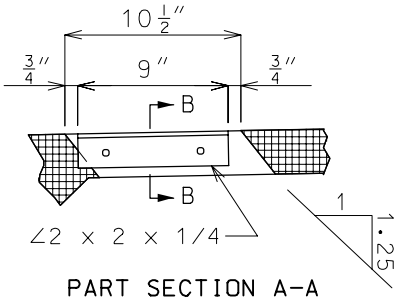

PART SECTION A-A

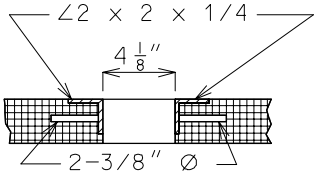

SECTION B-B

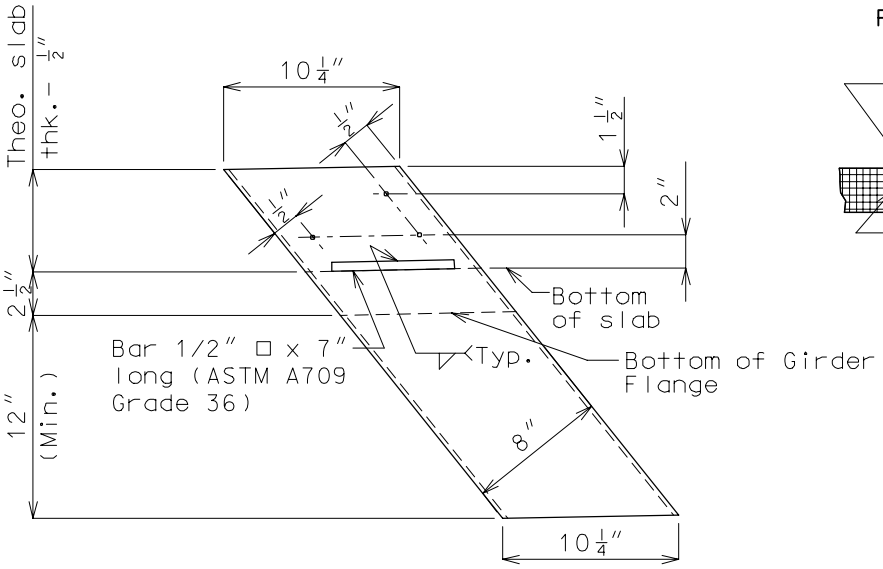

ELEVATION OF DRAIN

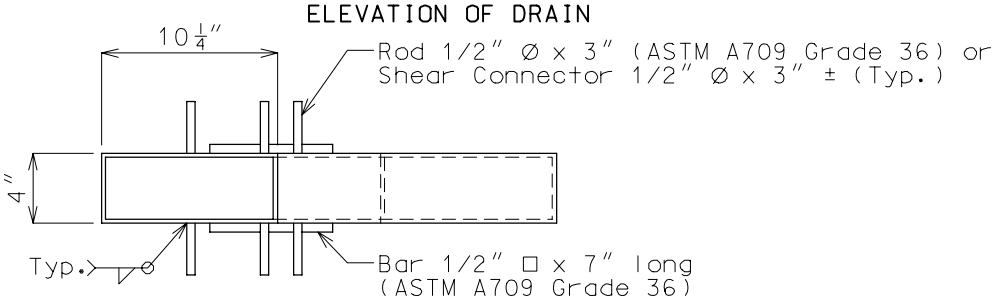

PLAN OF DRAIN

Safety Barrier Bridge Curb

SLAB DRAINS (CONT.)
PRESTRESSED BULB TEE GIRDER STRUCTURES
NO WEARING SURFACE
CANTILEVERS 3'-8" OR MORE

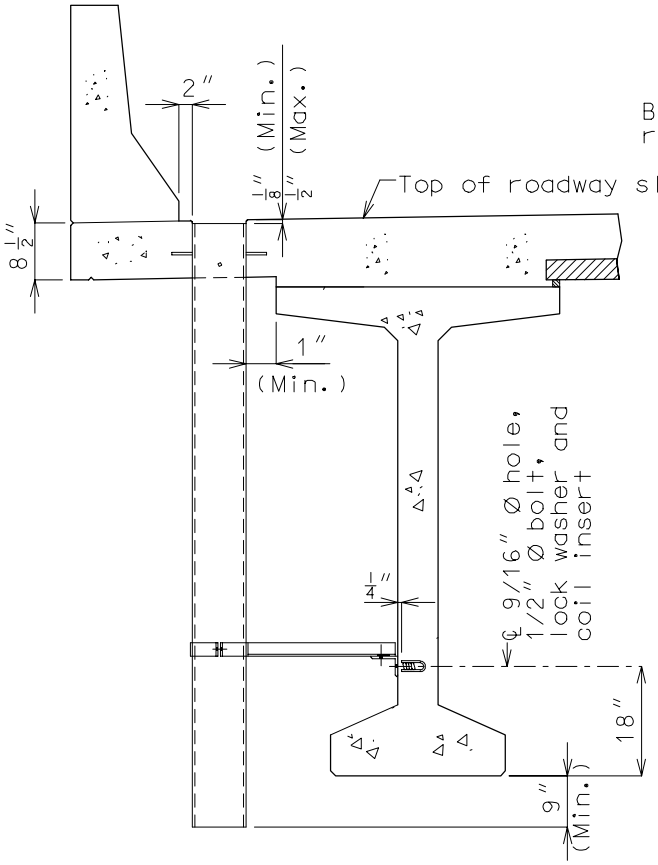

PART SECTION OF SLAB AT DRAIN

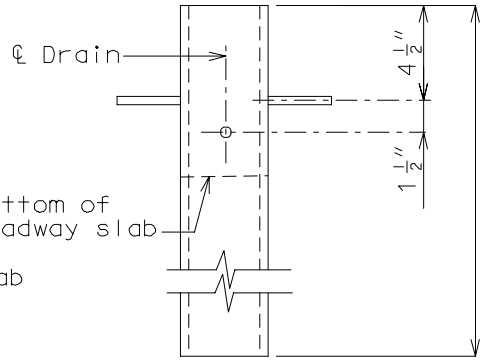

ELEVATION OF DRAIN

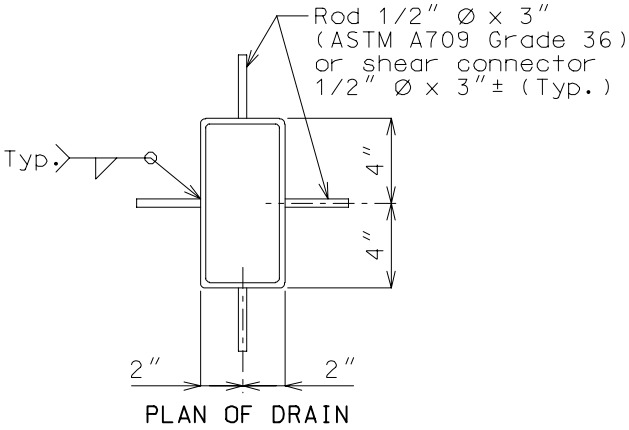

PLAN OF DRAIN

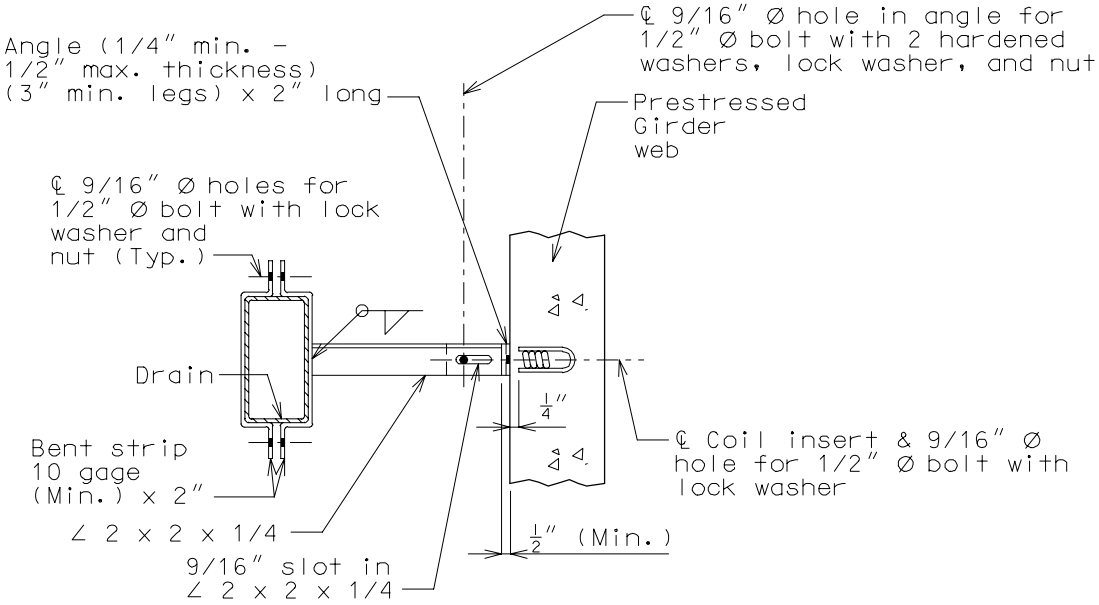

PART PLANS SHOWING BRACKET ASSEMBLY

SLAB DRAINS (CONT.)
PRESTRESSED BULB TEE GIRDER STRUCTURES
NO WEARING SURFACE
CANTILEVERS LESS THAN 3'-8"

Safety Barrier Bridge Curb

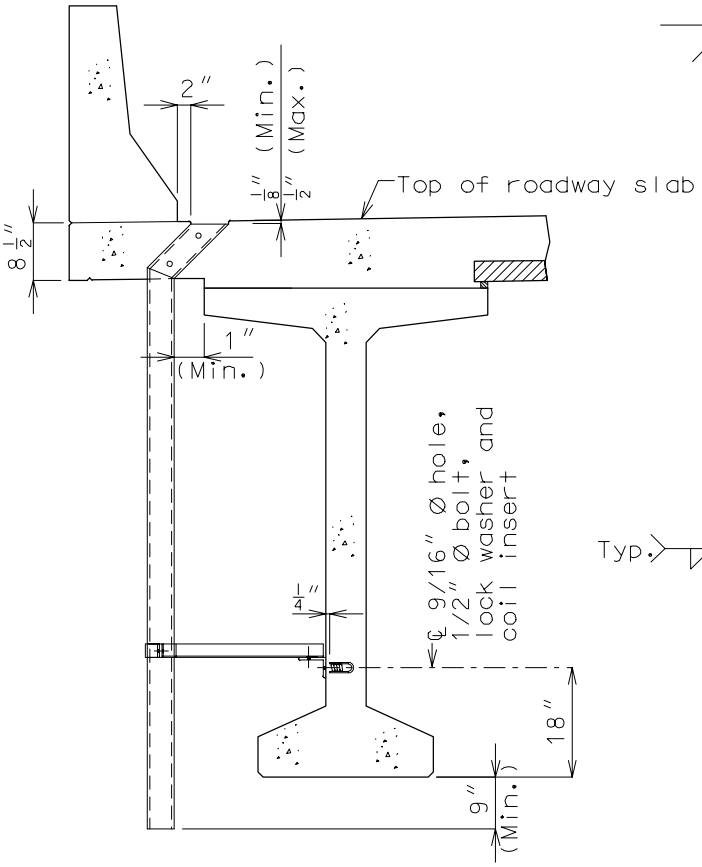

PART SECTION OF SLAB AT DRAIN

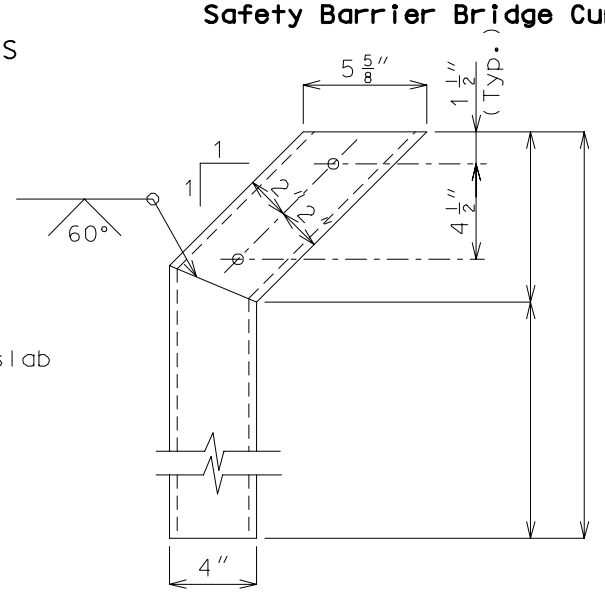

ELEVATION OF DRAIN

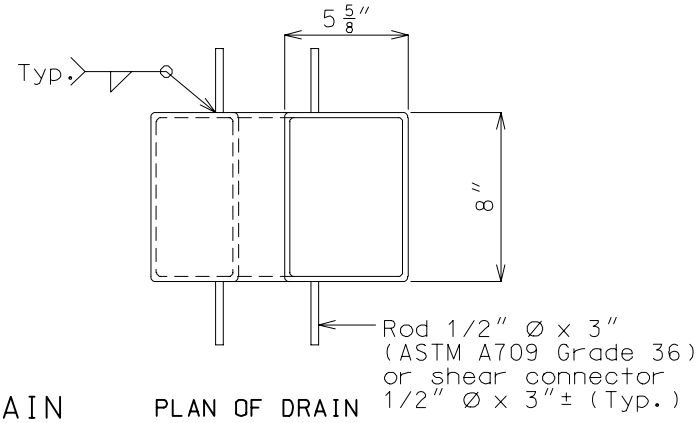

PLAN OF DRAIN

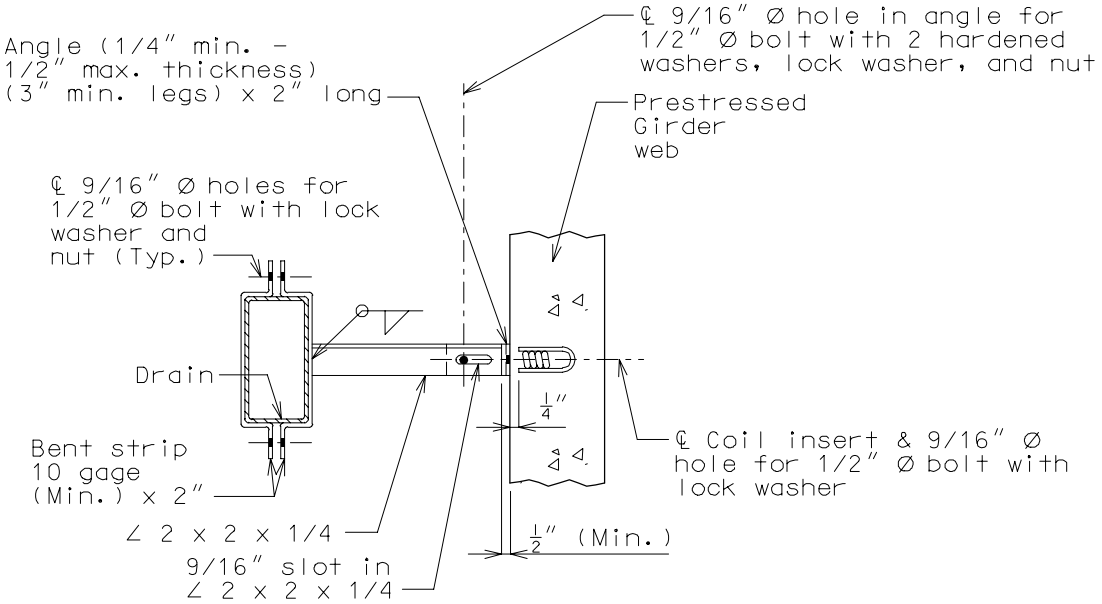

PART PLANS SHOWING BRACKET ASSEMBLY

SLAB DRAINS (CONT.)
GENERAL REQUIREMENTS FOR LOCATION OF SLAB DRAINS

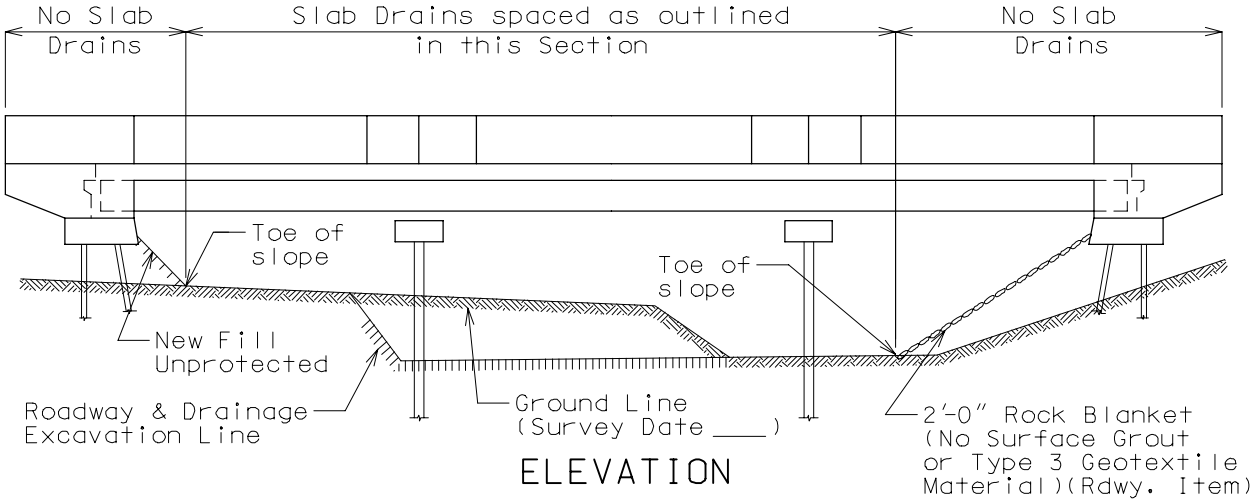

ELEVATION

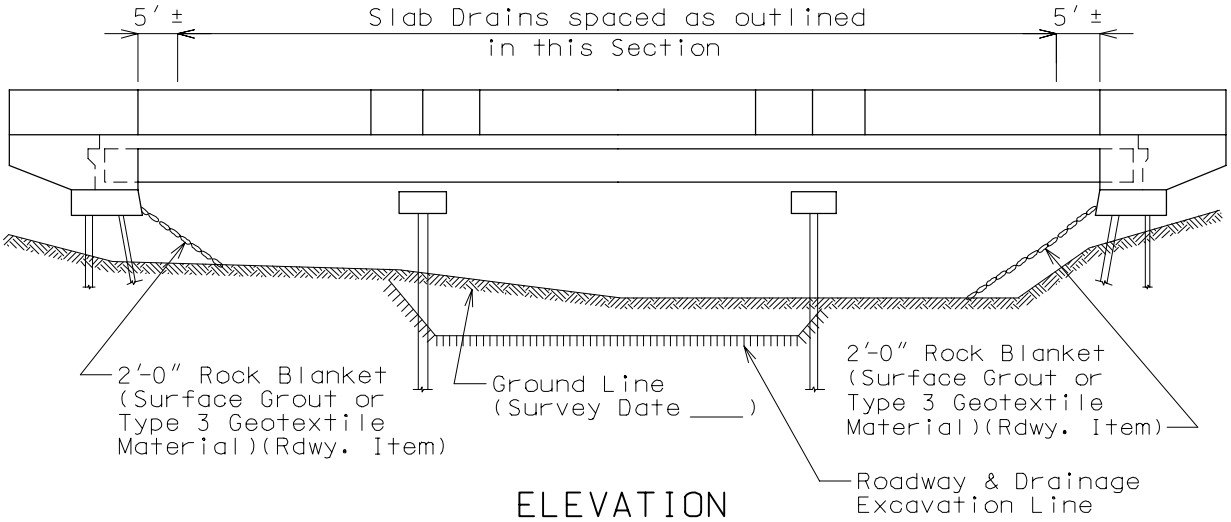

ELEVATION

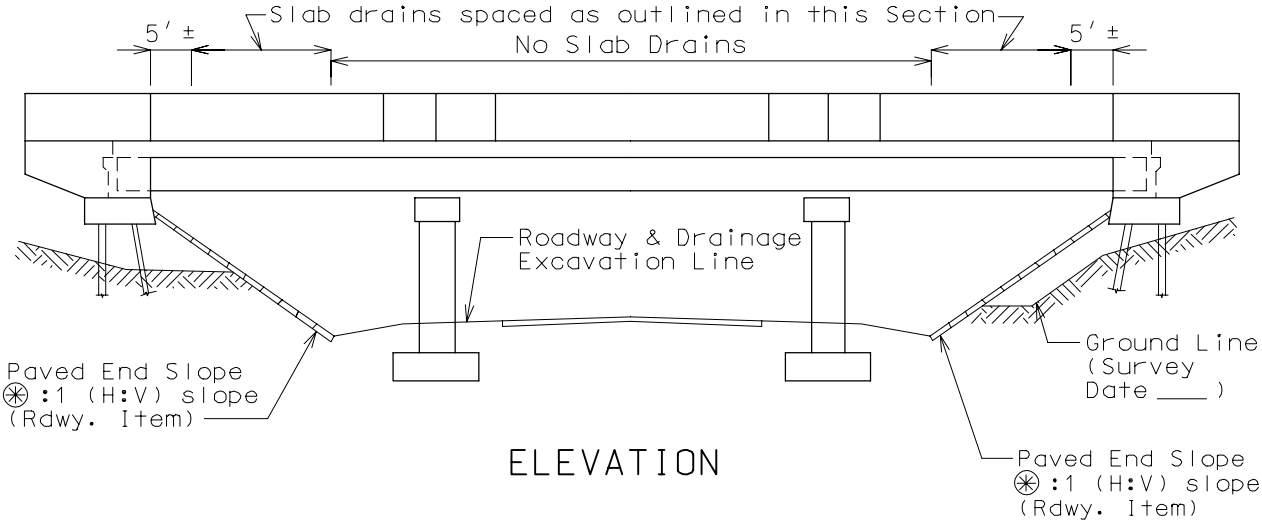

ELEVATION

⊛ See Design Layout for maximum slope of spill fill.

DETAILS OF MOUNTING LIGHT POLES ON CURB (16" SAFETY BARRIER CURB)

Safety Barrier Bridge Curb

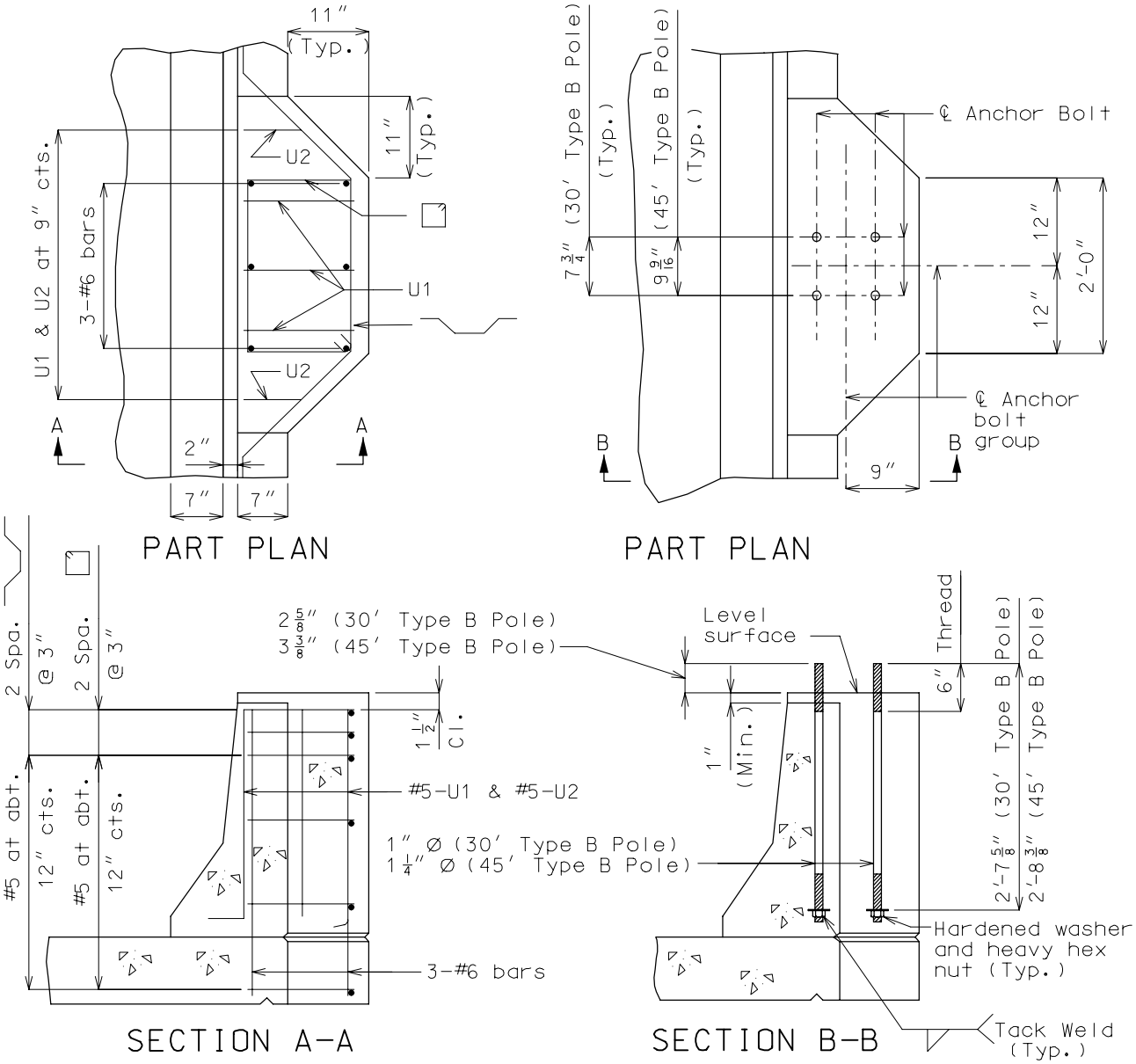

Note: Conduit not shown for clarity. See this section.

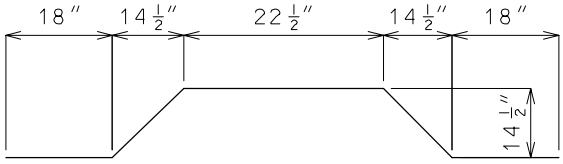

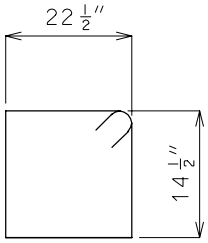

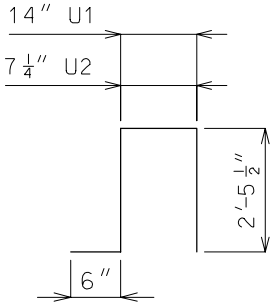

Anchor bolts and nuts shall be AASHTO M314-90 Grade 55. Anchor bolts, nuts and washers shall be fully galvanized.

Note to Detailer:
Extend slab transverse steel to edge of slab in blister region.

JOINT AND RUSTICATION DETAILS
CAST-IN-PLACE 16″ SAFETY BARRIER CURB

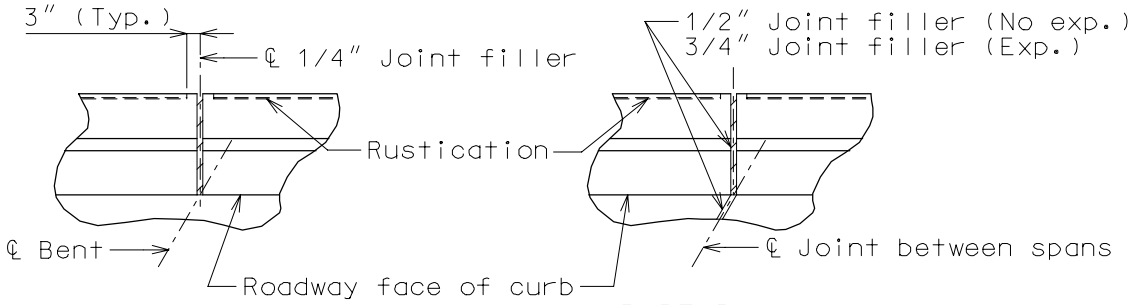

PART PLAN
CONTINUOUS
STRUCTURES

PART PLAN
SIMPLE
STRUCTURES

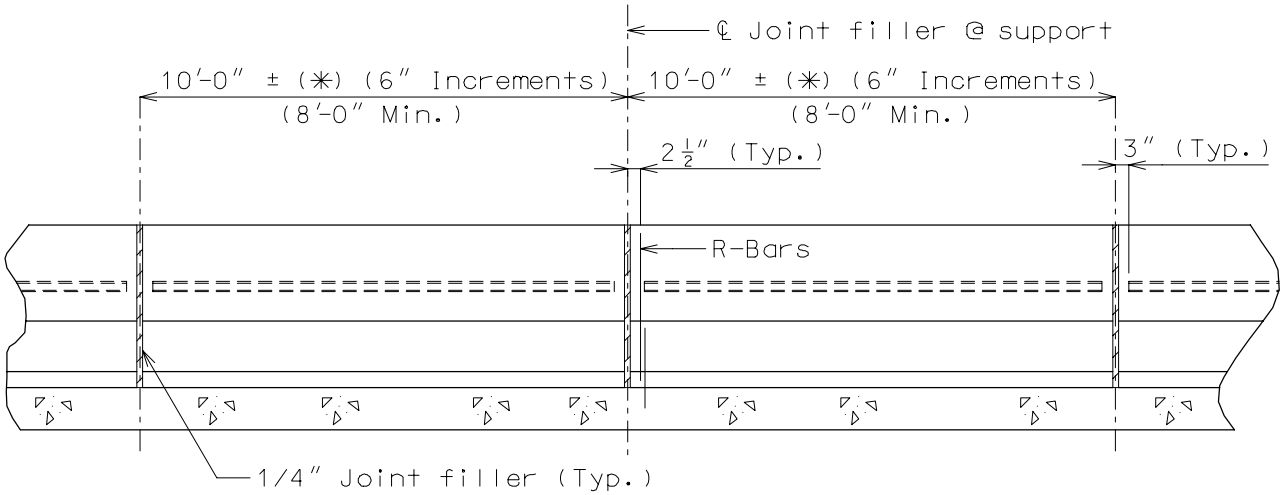

ELEVATION
ALL TYPES OF CONTINUOUS STRUCTURE

(✳) No more than 1/4 span on short spans (40′-0″ or less). Joints are located to prevent cracking in negative moment areas. Spans greater than 125′ requires two 8′-0″ (Min.) joints on each side of support.

See Section 2.4 for filled joint details.

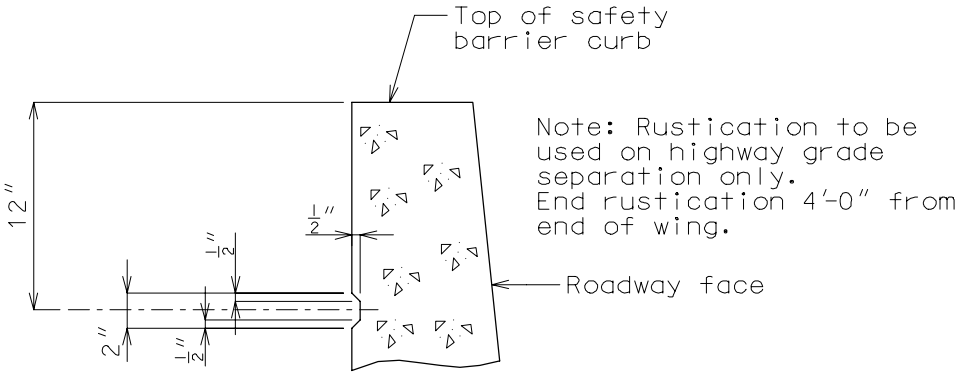

Note: Rustication to be used on highway grade separation only.
End rustication 4′-0″ from end of wing.

PART SECTION SHOWING
RUSTICATION DETAILS

JOINT AND RUSTICATION DETAILS (CONT.)
OPTIONAL SLIP FORM SAFETY BARRIER CURB

Safety Barrier Bridge Curb

Note: All joints and gaps required for expansion need to be provided in the barrier curb.

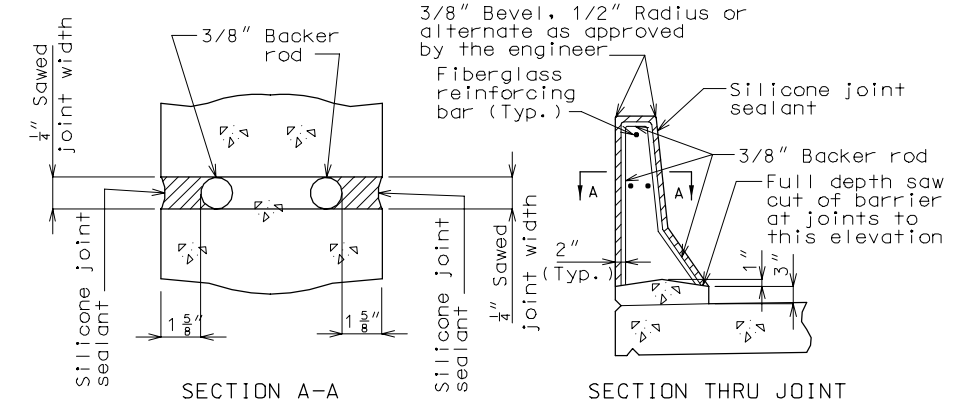

SECTION A-A

SECTION THRU JOINT

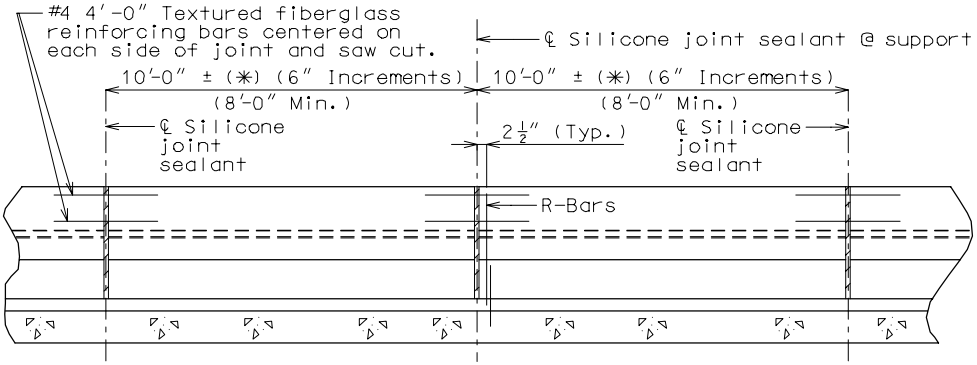

ELEVATION
ALL TYPES OF CONTINUOUS STRUCTURE

(✳) No more than 1/4 span on short spans (40'-0" or less). Joints are located to prevent cracking in negative moment areas. Spans greater than 125' requires two 8'-0" (Min.) joints on each side of support.

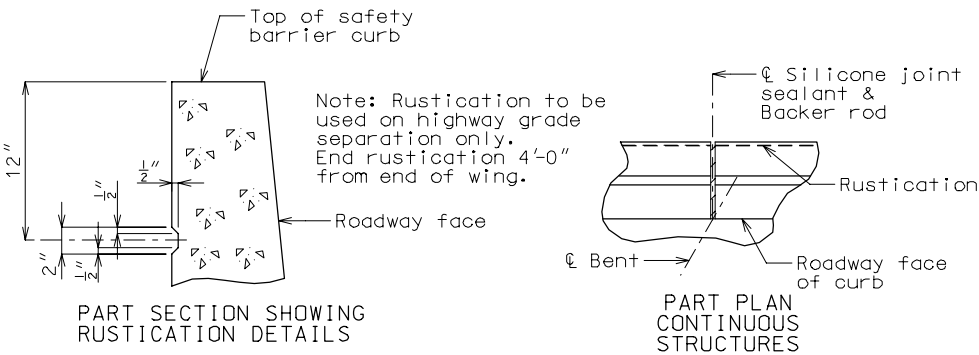

PART SECTION SHOWING RUSTICATION DETAILS

PART PLAN CONTINUOUS STRUCTURES

PLASTIC WATERSTOP ON BRIDGE

Safety Barrier Bridge Curb

On several of our bridges we have experienced water seepage at the filled joints in the curb. In addition to unsightly water stains, this seepage creates expensive maintenance problems, particularly now that deicing chemicals are widely used.

To eliminate this problem, use a plastic waterstop, as specified, and in accordance with details shown below.

Use a plastic waterstop at all safety barrier curb joints on grade separations, except over railroads and county roads.

Use a plastic waterstop on lower safety barrier curb joint only, for structures with superelevation on grade separations.

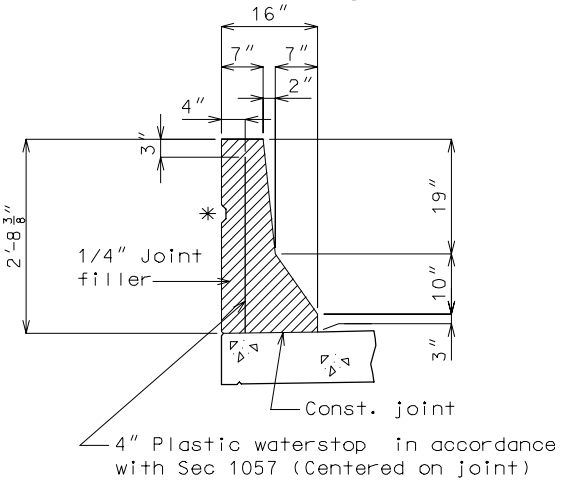

✳ Rustication to be used on highway grade separations only.

SAFETY BARRIER CURB
JOINT FILLED

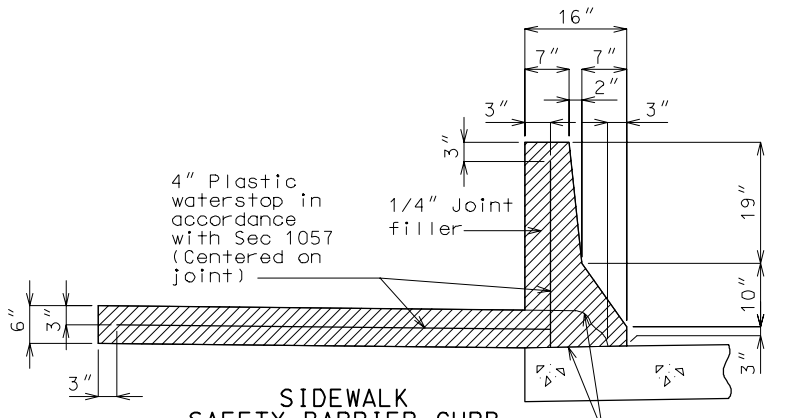

SIDEWALK
SAFETY BARRIER CURB
JOINT FILLED

DETAILS OF EXPANSION DEVICE MOVEMENT GAUGE

Safety Barrier Bridge Curb

All expansion joints shall be equipped with a movement gauge so an historical visual record showing total movement can be established.

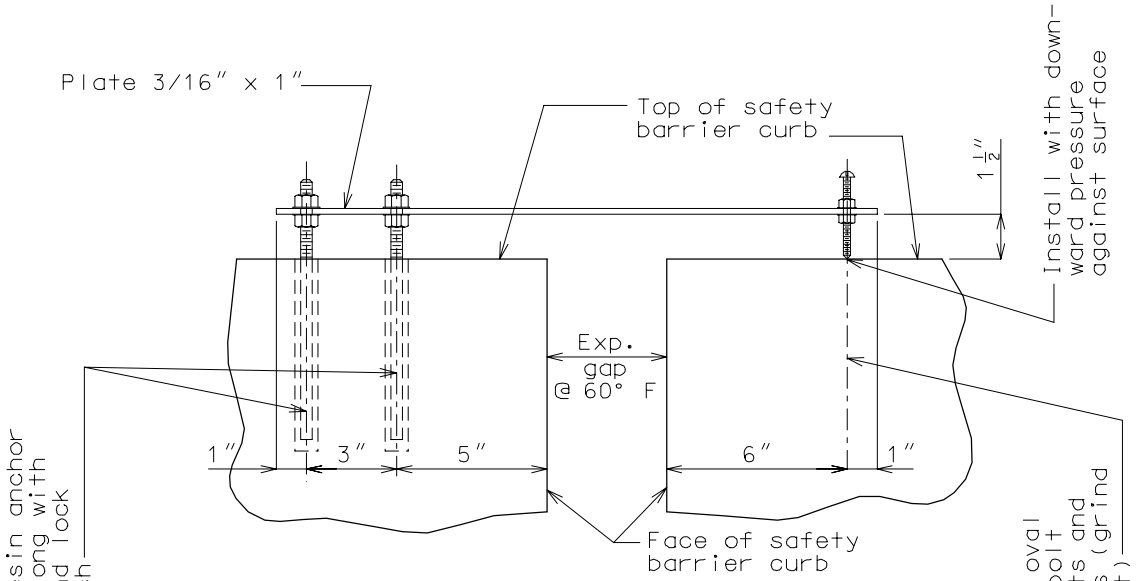

PART ELEVATION OF BARRIER CURB
SHOWING MOVEMENT GAUGE

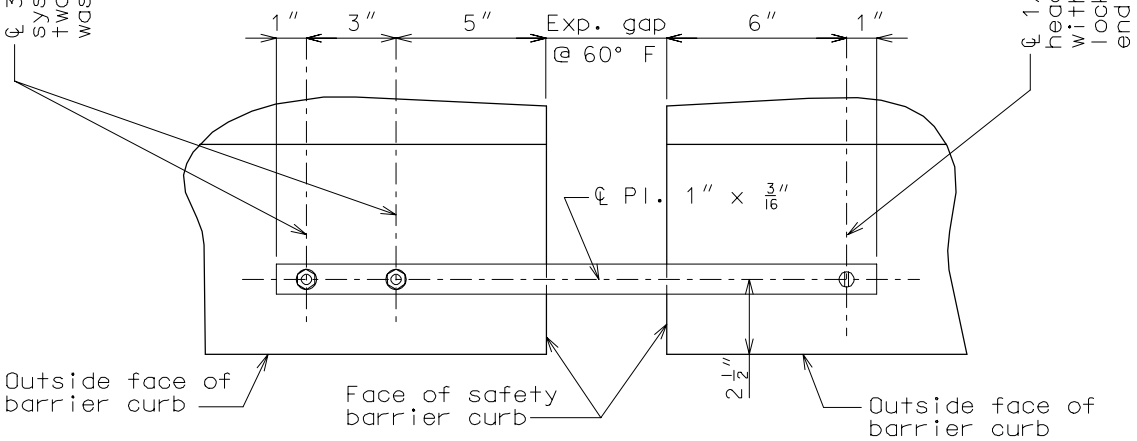

PART PLAN OF BARRIER CURB
SHOWING MOVEMENT GAUGE

Add following notes to plans.

Notes:
A movement gauge shall be provided on one side of bridge at all safety barrier curb expansion joints.

All steel shall be galvanized.

Cost of movement gauge, complete-in-place, shall be included in the contract unit price bid for Safety Barrier Curb.

DETAILS AT END BENTS

Thrie Beam Bridge Rail

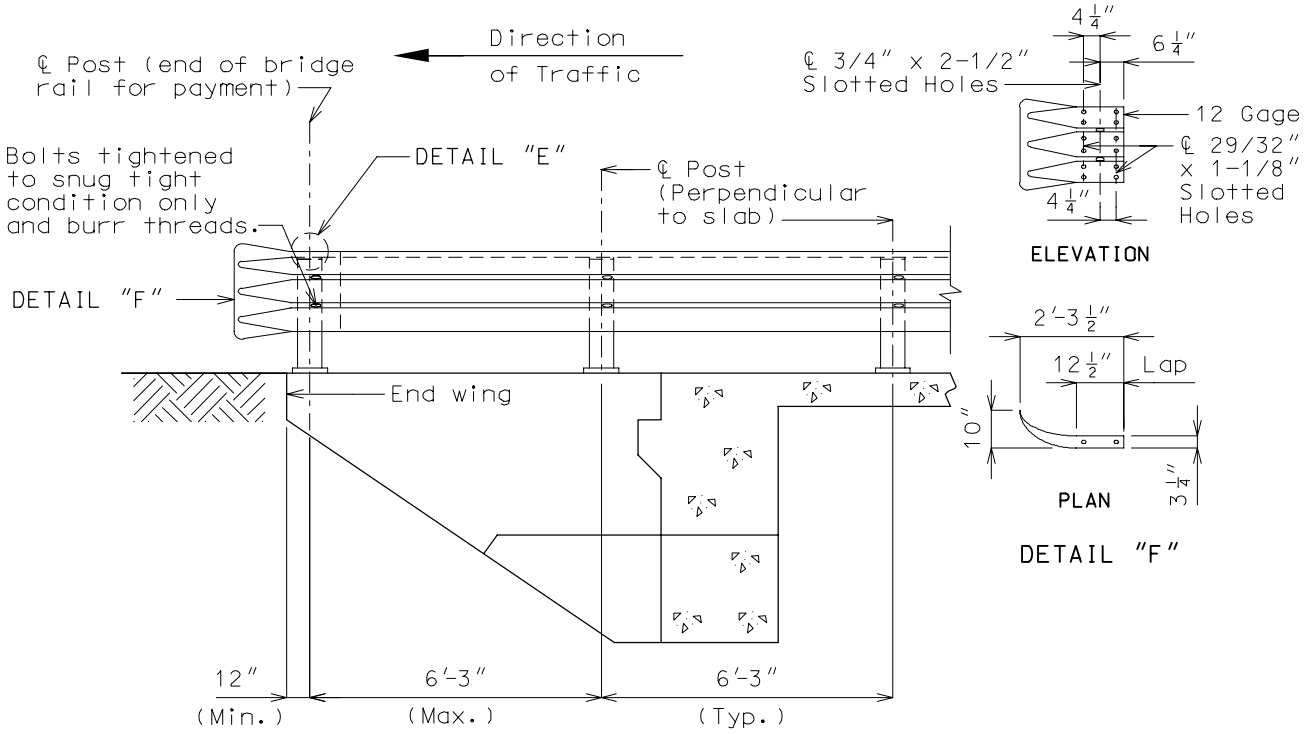

PART SECTION AT END BENT
SHOWING THRIE BEAM RAIL

Note: At bridge ends for two-way pavement, use guard rail at all four corners, and for divided pavement, use a guard rail at entrance ends only (unless required at exit end for a high fill).

Use a transition section on all state system structures and on all off-system structures which have guard rails on the approaches.

Use flared ends on off-system structures which do not have guard rails on approaches.

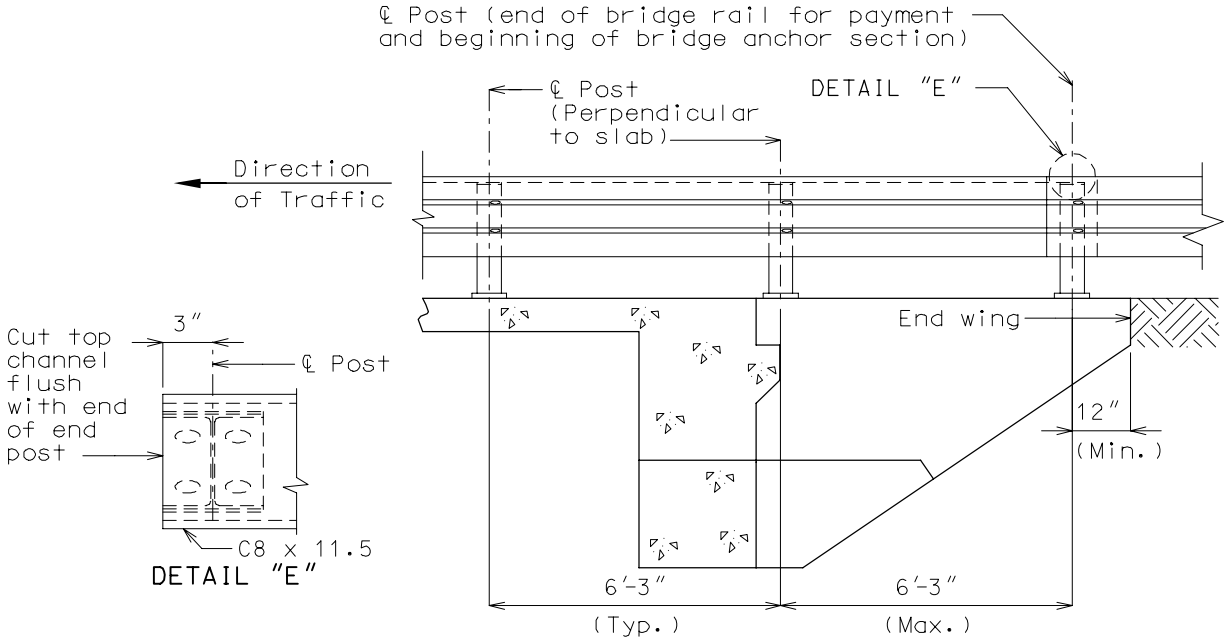

PART SECTION AT END BENT
SHOWING THRIE BEAM RAIL

DETAILS AT JOINT OPENINGS

Thrie Beam Bridge Rail

JOINT OPENING (THRU 2")

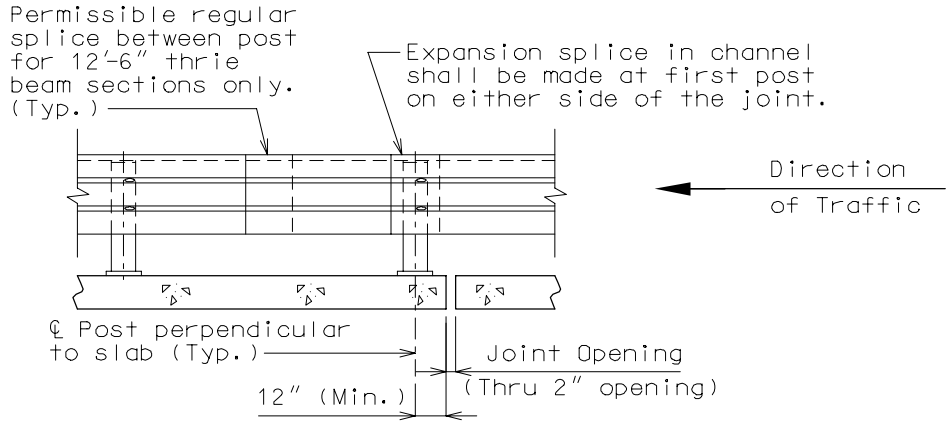

PART SECTION THRU SLAB
SHOWING THRIE BEAM RAIL

Note: Expansion splices in the Thrie Beam Rail shall be made at either the first or second post on either side of the joint and on structure at bridge ends.

When the splice is made at the second post, an expansion slot shall be provided in the Thrie Beam Rail for connection to the first post to allow for movement.

In addition to the expansion provision at these expansion joints. expansion splices in the Thrie Beam Rail and the channel shall be provided at other locations so that the maximum length with expansion provisions does not exceed 200 ft.

JOINT OPENING (OVER 2")

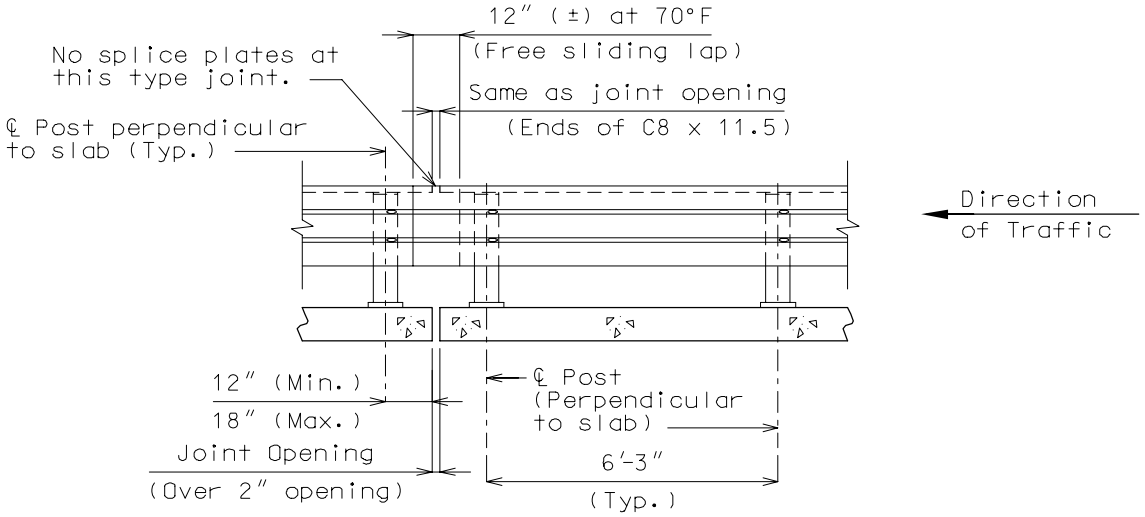

PART SECTION THRU SLAB
SHOWING THRIE BEAM RAIL

Note: See this bridge manual section for Thrie Beam Rail splice details and channel member details.

SYSTEM 1: DETAILS AT RAIL POST TYPICAL CONNECTION

System 1: Applicable for new construction and all slab depths ≥ 8-1/2″.
Connection design load is 1.5 times plastic moment capacity (Mp) of W6 x 20 post.
For details used for rehabilitation structures, see section 3.90.

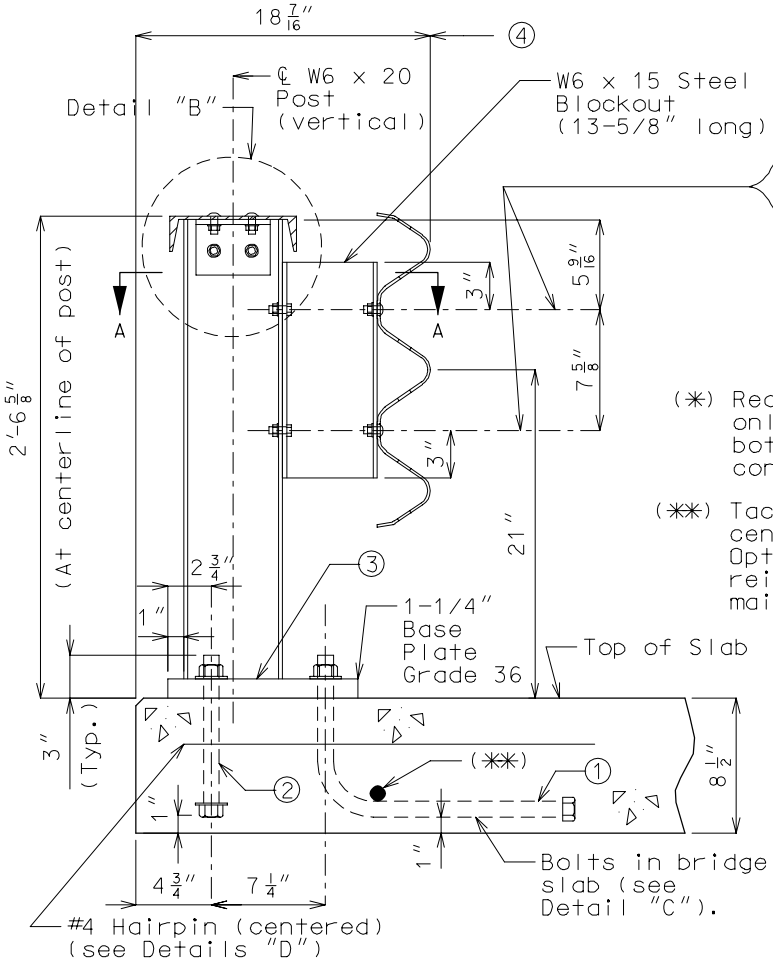

PART SECTION THRU SLAB AT RAIL POST

Blockout-to-Post Conn.
℄ 2 Holes 13/16″Ø in W6 x 20 Post flange and W6 x 15 Blockout flange

℄ 2 Hex head bolt 5/8″Ø with two washers and hex nut in W6 x 20 Post flange

Thrie Beam-to-Blockout Conn.
℄ 13/16″ x 2-1/2″ Vertical slotted hole in W6 x 15 Blockout flange (✳)

℄ 5/8″Ø Carriage bolt with one flat washer and hex nut

(✳) Required on one side of web only, but may be provided on both sides of web at the contractor's option.

(✳✳) Tack weld same size bar (32″ long and centered) as slab longitudinal reinf. Optional to wrap bolt under slab long. reinf. provided that 1″ clearance is maintained to bottom of slab.

① 3 Bolts 1″Ø A307 with hex nuts and washers

② 2 Bolts 1″Ø A307 with hex nuts and standard flat washers. Use same length bolts in End Bent Wing as in slab.

③ Bevel bottom of post (slope 2% or slab elevation). Galvanize Base Plate after fabrication.

④ Nominal roadway width and face of Thrie Beam Rail

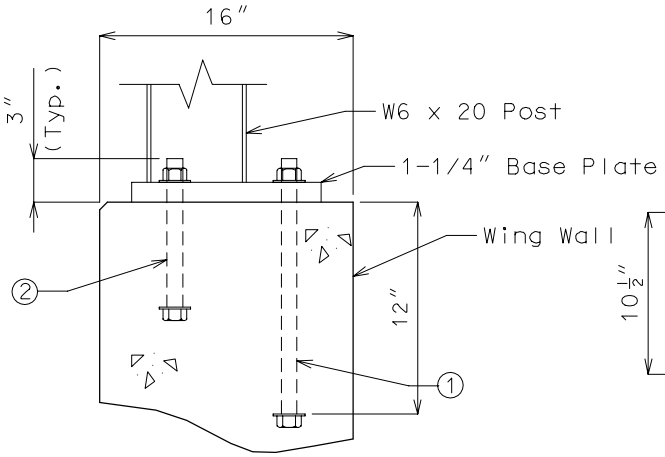

PART SECTION AT END BENT WING

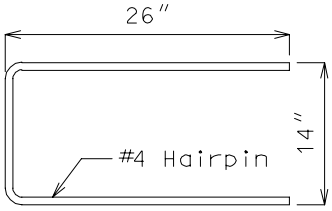

DETAIL "D"

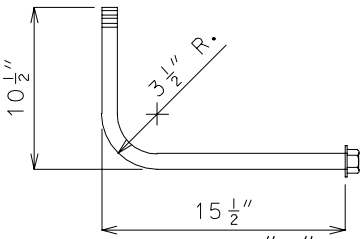

DETAIL "C"

Bolt shall not be bent in slab depths greater than 14″, use 12″ straight embedment.

Note: Design weight of (12 gage) Thrie Beam Bridge Rail = 35#/lin. ft.

SYSTEM 1: DETAILS AT RAIL POST TYPICAL CONNECTION (CONT.)

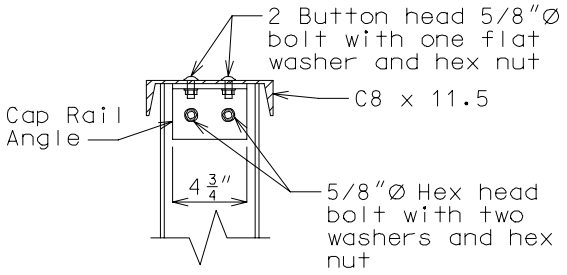

DETAIL "B"

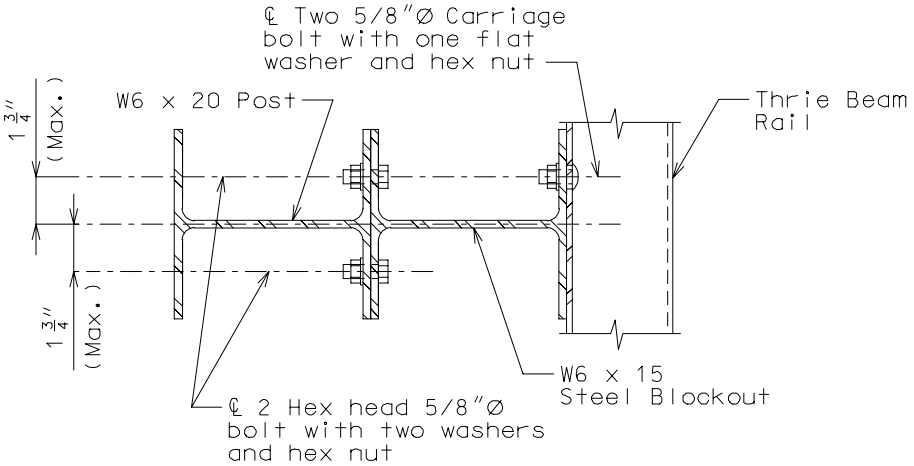

SECTION A-A

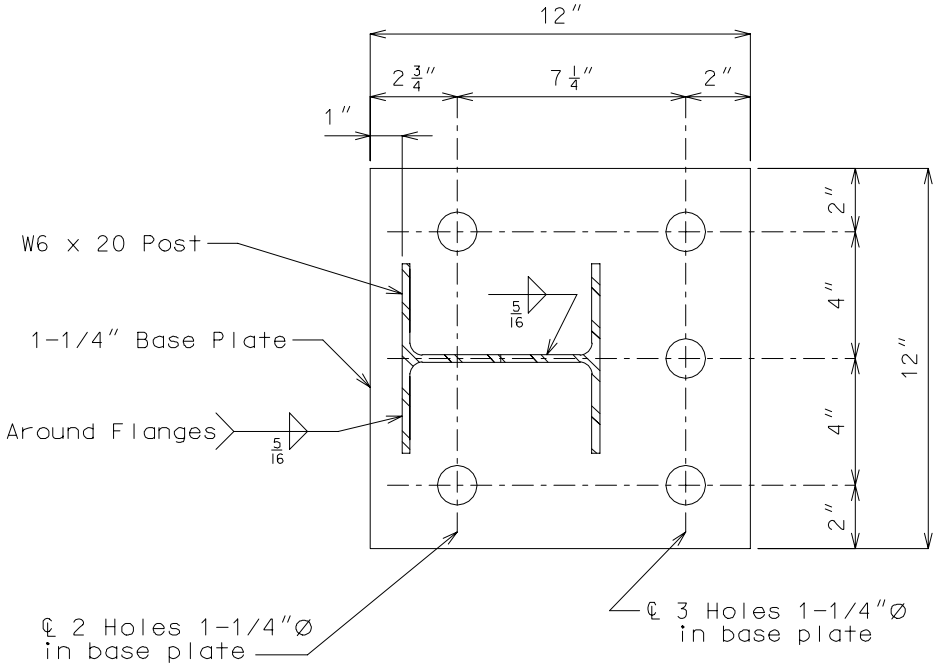

1-1/4" BASE PLATE

CHANNEL MEMBER DETAILS

Thrie Beam Bridge Rail

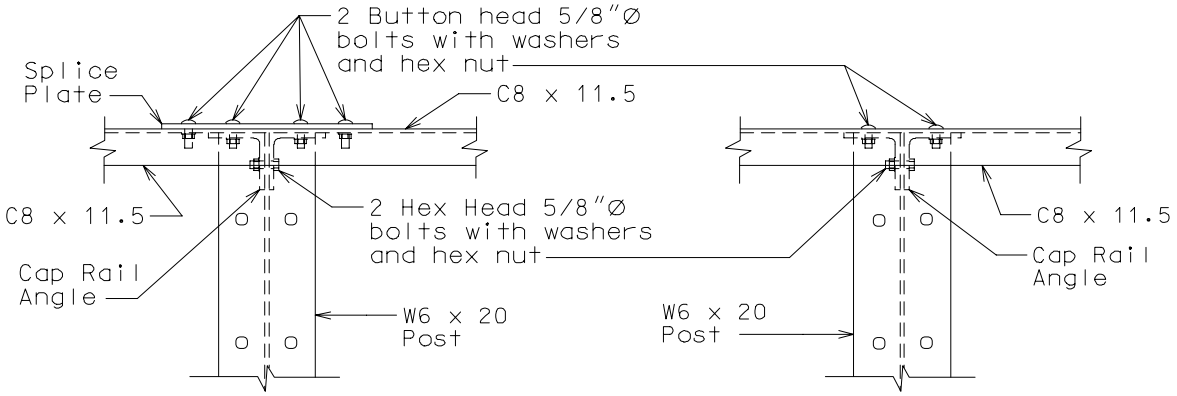

TYPICAL SPLICE ELEVATION

CONNECTION TO RAIL POST ELEVATION

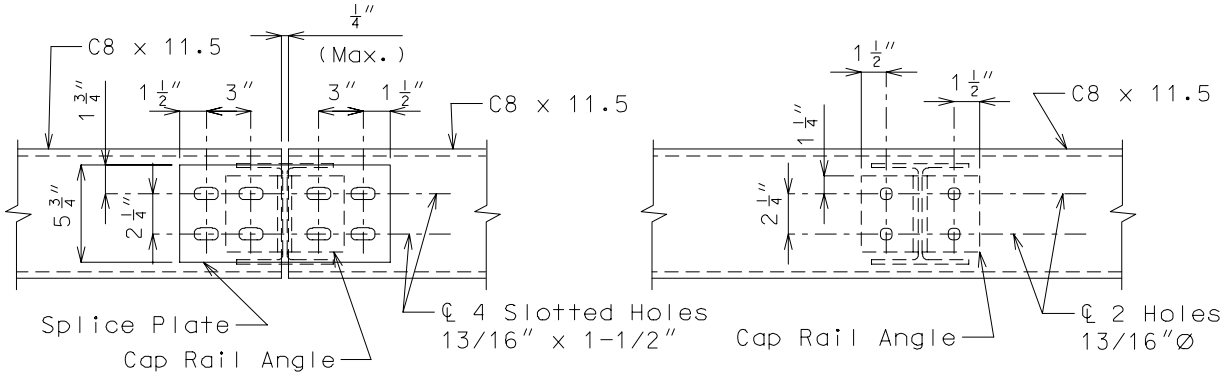

TYPICAL SPLICE PLAN

CONNECTION TO RAIL POST PLAN

Shop or field splice at any location (Max. one per panel)

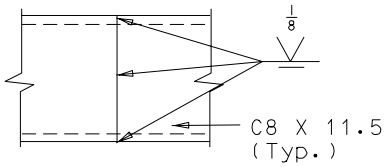

OPTIONAL SPLICE

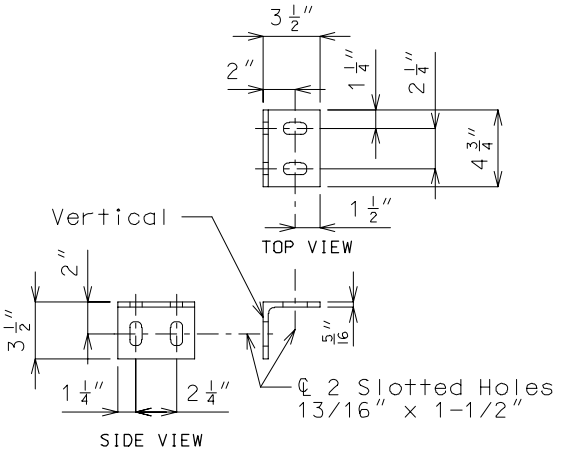

CAP RAIL ANGLE
(∠3-1/2 x 3-1/2 x 5/16)

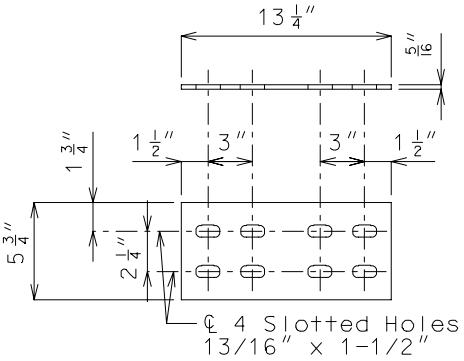

SPLICE PLATE

CHANNEL MEMBER DETAILS (CONT.) Thrie Beam Bridge Rail

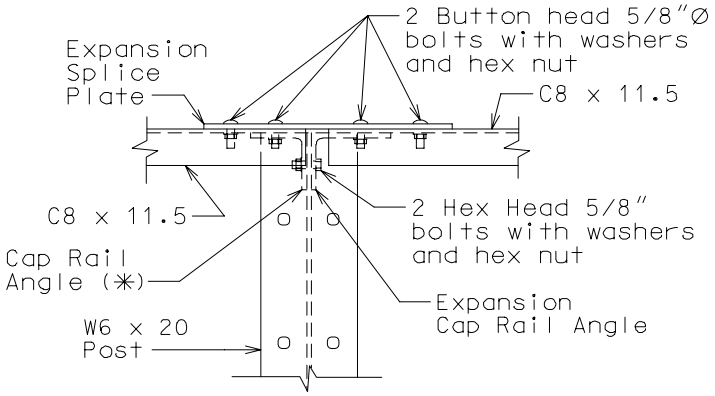

EXPANSION SPLICE ELEVATION

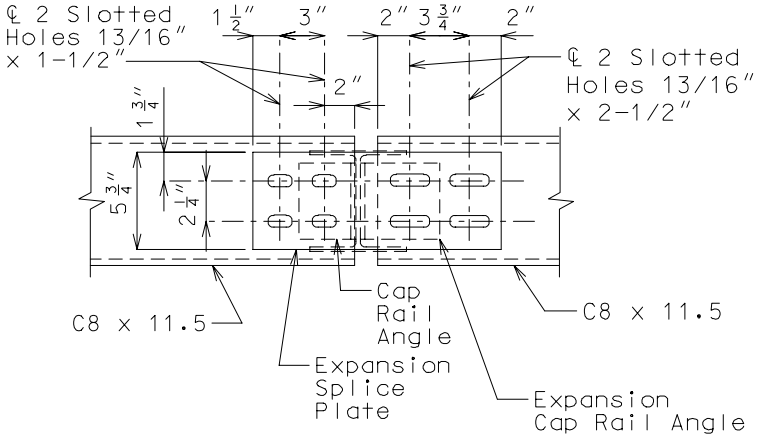

EXPANSION SPLICE PLAN

Expansion slots same side of post as exp. joint

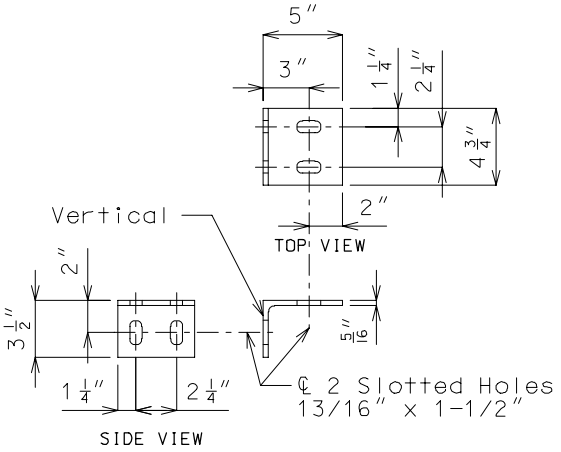

EXPANSION CAP RAIL ANGLE

(∠5 x 3-1/2 x 5/16)

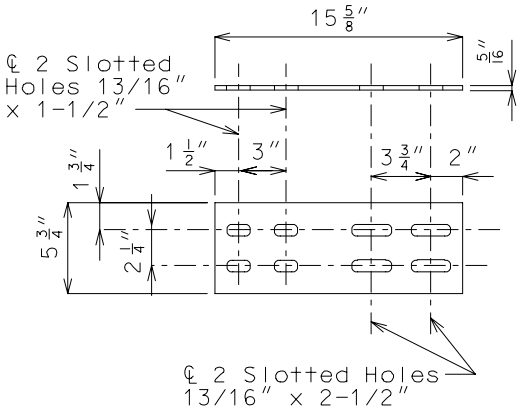

EXPANSION SPLICE PLATE

(✳) For details of Cap Rail Angle, see page 6.1-5 of this section.

THRIE BEAM RAIL DETAILS

Thrie Beam Bridge Rail

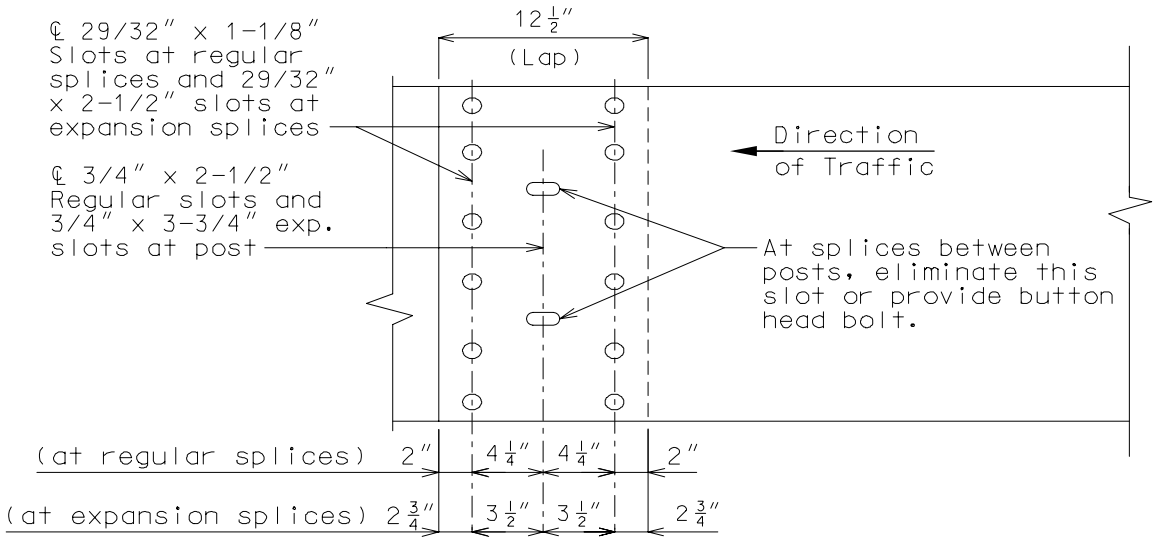

THRIE BEAM RAIL SPLICE DETAILS

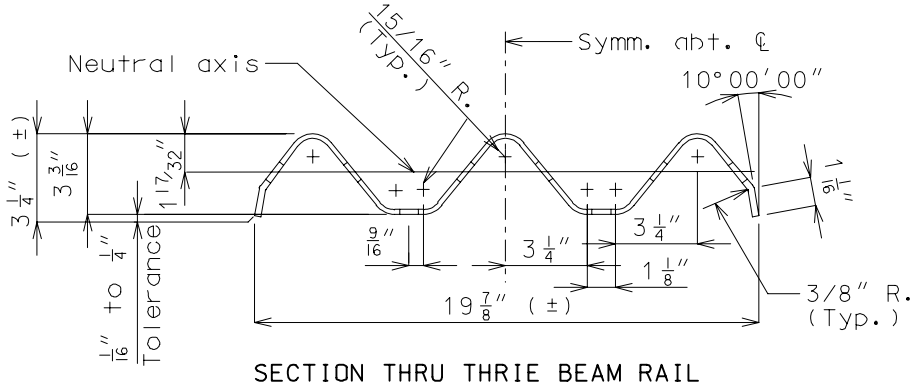

SECTION THRU THRIE BEAM RAIL

	10 Gage	12 Gage
Area	4.0 sq. in.	3.1 sq. in.
Section Modulus	2.80 cu. in.	2.19 cu. in.

Note: 5/8″ Ø button head oval shoulder bolts with hex. nuts at all slots. (Thickness of hex. nuts = 3/8″ min.). Special drilling of the thrie beam may be required at the splices. (All drilling details are to be shown on the shop drawings.)

Note: Thrie Beam Rail weight = 10.6 lbs./ft. for 12 gage.

Note: For details not shown, see page 6.1-3 thru 6.1-7 of this section.

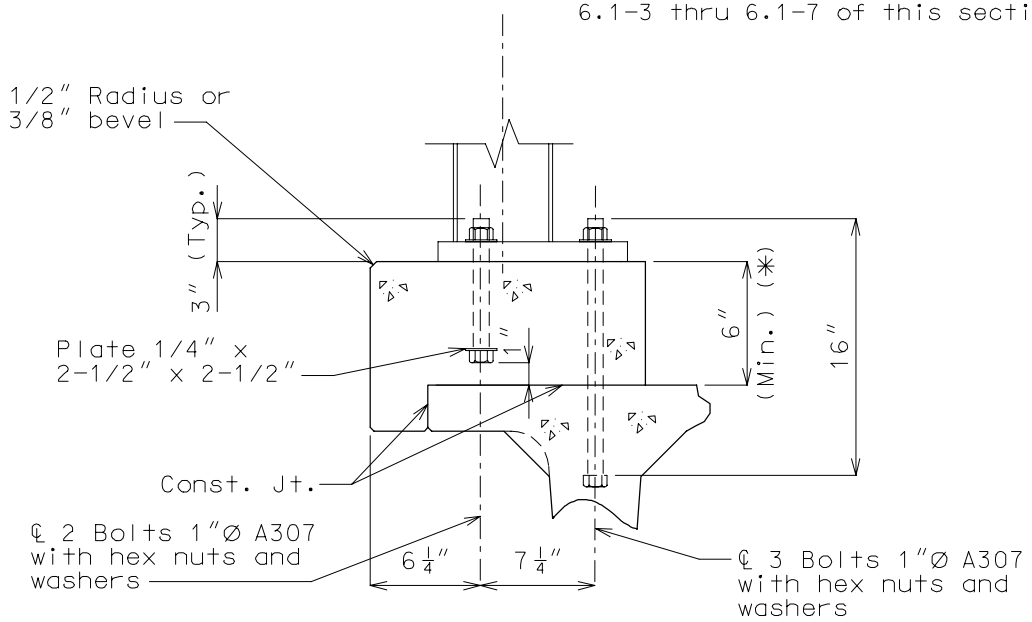

PART SECTION AT RAIL POST

(✳) See Double-Tee Section in Bridge Manual.

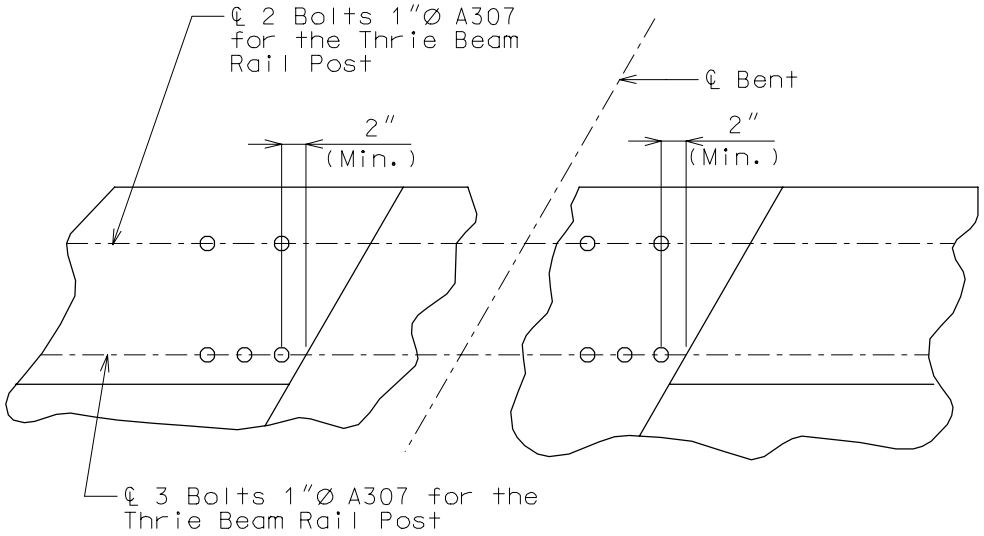

BOLTS IN GIRDER BOLTS IN DIAPHRAGM

PART PLAN AT INTERMEDIATE BENT

Note: Adjust the Thrie Beam Rail Post spacing to meet the requirements as shown above.

TABLE FOR THRIE BEAM RAIL ON HORIZONTAL CURVES

Thrie Beam Bridge Rail

	Thrie Beam Rails on Horiztal Curves (✳)		
	Radial to Face of Rail	Maximum Chord Length	Fabrication
Channel Member	Over 4,000′ Over 2,230′ - 4,000′ Over 1,250′ - 2,230′	43′-9″ 31′-3″ 25′-0″	Furnish and erect in straight rail panels.
Channel Member	Over 480′ - 1,250′ Over 250′ - 480′	18′-9″ 6′-3″	Bevel weld chord sections of channel or fabricate to the required radius.
Channel Member	Thru 250′	0	Fabricate to required radius.
Thrie Beam Rail	Over 150′		Furnish in straight sections.
Thrie Beam Rail	Thru 150′		Fabricate to required radius.

(✳) Loss of half the tolerance provided between bolts and holes, or between splice plates and rail members has been allowed in determining these controls.

CONDUIT SYSTEMS

Conduit Systems

General

Conduit systems shall be provided on structures when specified on the Design Layout.

All Conduit shall be rigid non-metallic schedule 40 heavy wall PVC (Polyvinyl Chloride Plastic). See Section 4 pages H4-A1 and H4-A2 for appropriate notes.

All Conduit Clamps, if required, shall be commercially available conduit clamps approved by the engineer.

Size

Conduit size shall be specified on the Design Layout.

Location

Single 2″ round conduit shall be placed in the slab.
Single conduit greater than 2″ round shall be placed in the barrier curb (4″ Ø max. for bridge without sidewalk, 3″ Ø max. for with sidewalk).
Placement of multiple conduit shall be determined on a case by case basis. Options include placing conduit on hangers, encasing conduit in concrete that is attached to slab, and encasing conduit in safety barrier curb if there is enough room. Multiple conduits are not allowed in curb when sidewalk is used.
See page 7.1-2 for example details.

Expansion Fittings

Expansion fittings shall be specified on the plans when conduit passes across expansion devices and filled joints, including filled joints in the barrier curb when conduit is located in the curb.

Expansion movements shall be specified at each location of an expansion fitting. Expansion fittings shall be able to accommodate movement 1-1/2 times the designed expansion movement or 4 times the joint filler thickness rounded to nearest half inch.

Example 1 - Plate Girder with expansion length of 300 ft.
Δ(Steel) = (0.0000065)(140)(300)(12) = 3.276 inches
Δ(Fitting)total = 1.5 x 3.276 = 4.914inches
Δ(Fitting)either direction = (4.914/2) = 2.457 inches
Use 2-1/2 inches in note H4.7.

Example 2 - 1/4″ Joint filler in curb
Δ(Fitting)total = 4 x 0.25 = 1.0 inch
Δ(Fitting)either direction = (1.0/2) = 0.5 inch
Use 1/2 inch in note H4.7.

Junction Boxes

Size and location of junction boxes shall be specified on the plans when a conduit system is used. The minimum size junction box for 2″ round conduit is 12″ x 12″ x 4″. The minimum size junction box for greater than 2″ round conduit is 12″ x 14″ x 6″. The minimum size junction box for 4″ Ø round conduit is 16″ x 12″ x 6″. No more than one 4″Ø conduit shall be allowed in safety barrier curb and none are allowed when sidewalk is used due to clearance problems with reinforcement and inadequate concrete cover. Multiple conduits are not allowed in safety barrier curb when sidewalk is used. A junction box shall be located in a wing at each end of the bridge. Junction boxes shall also be located on the bridge when junction box spacing is greater than 250 feet. Junction boxes located in the slab or barrier curb shall preferably be located in areas accessible from underneath the bridge. See Page 7.1-3 for details of locations of junction boxes.

CONDUIT SYSTEMS PLACEMENT

Conduit Systems

(✳) Use 2″ Ø or 3″ Ø conduit for bridges with sidewalk; Use 4″ Ø (Max.) conduit for bridge without sidewalk.

(✳✳) Multiple conduits are not allowed when sidewalk is used.

4″ Ø conduit not allowed in curb when sidewalk is used.

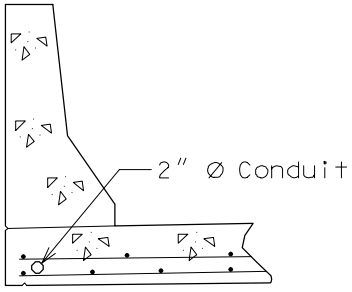

SECTION OF CONDUIT IN SLAB

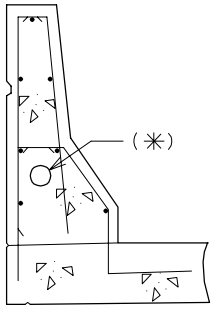

SECTION OF CONDUIT IN BARRIER CURB

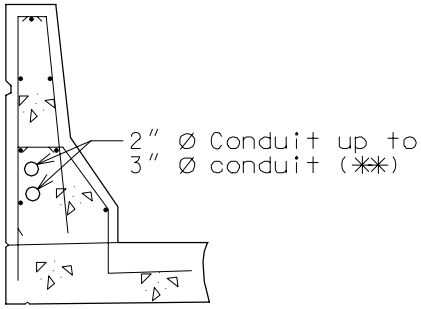

SECTION OF MULTIPLE CONDUIT IN BARRIER CURB

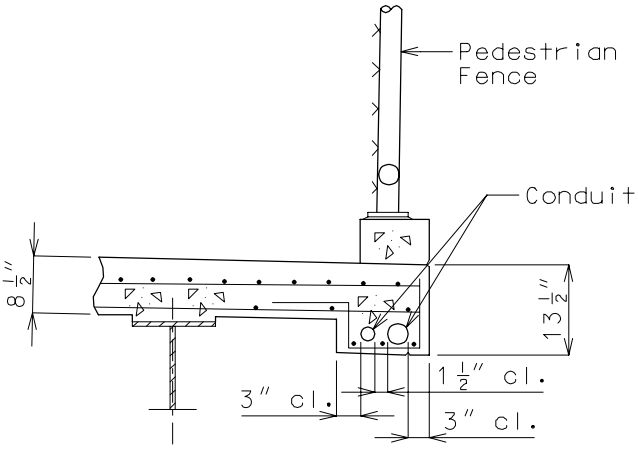

SECTION OF MULTIPLE CONDUIT ENCASED IN SLAB

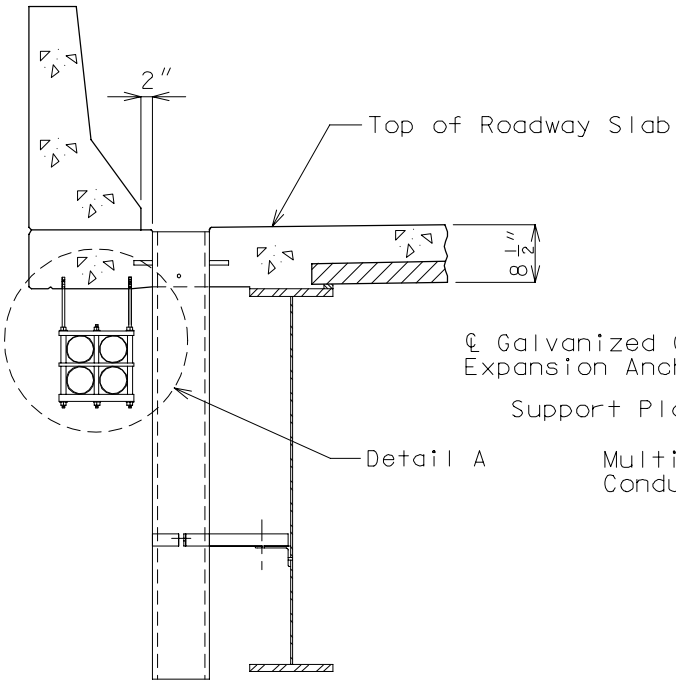

PART SECTION OF SUSPENDED CONDUIT AT DRAIN

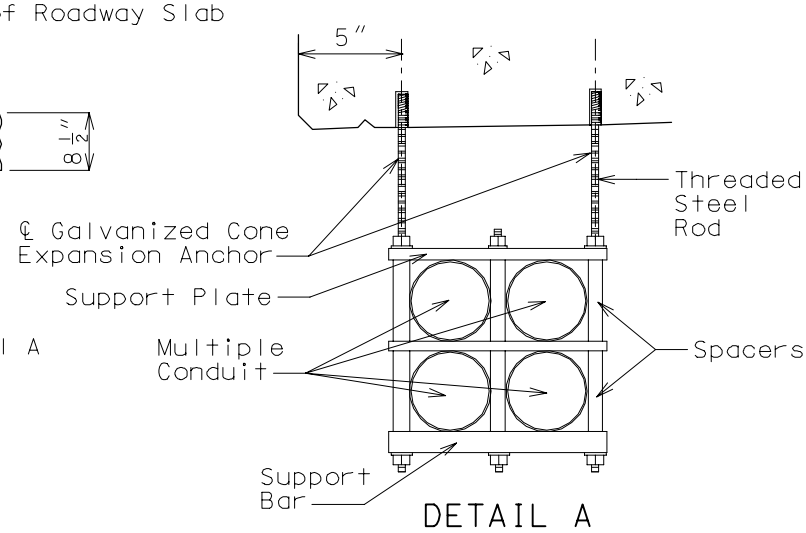

DETAIL A

DETAILS OF JUNCTION BOXES

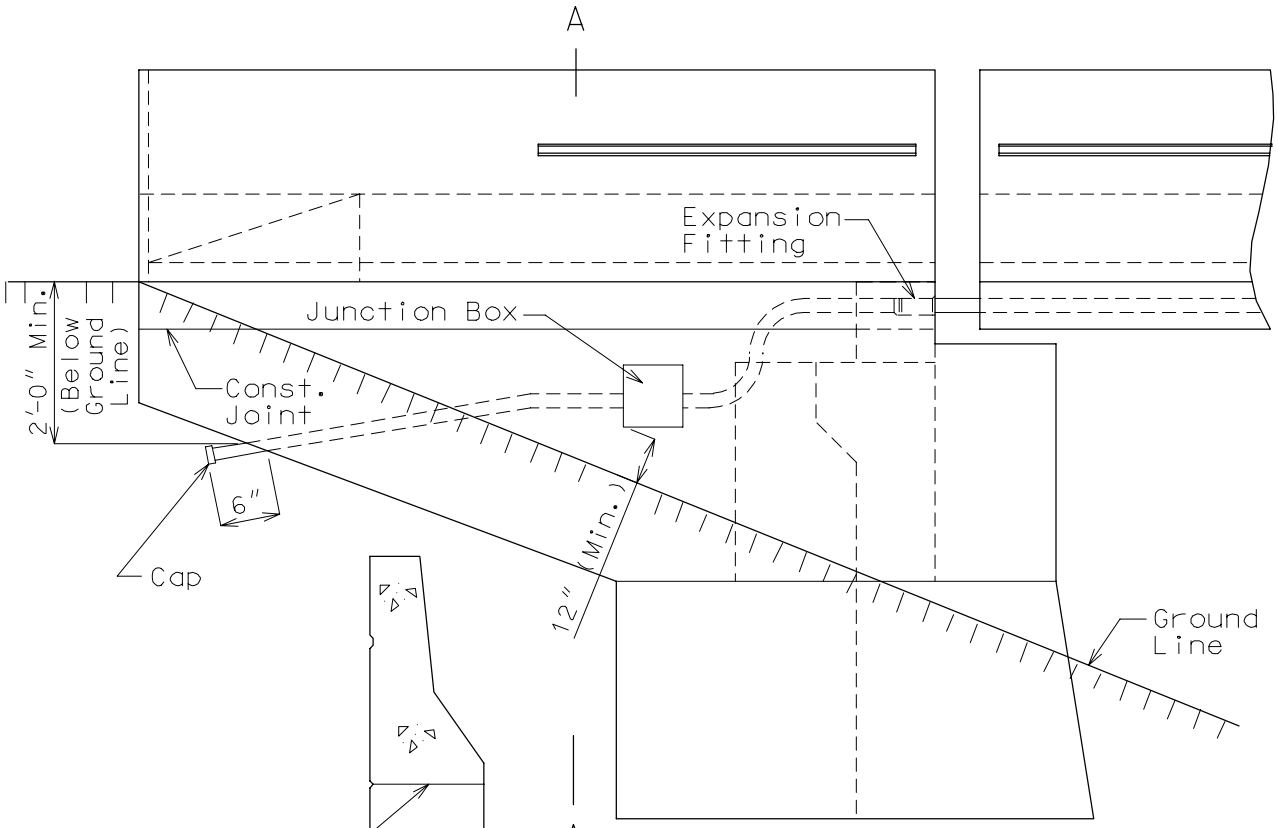

PART ELEVATION OF JUNCTION BOX IN WING

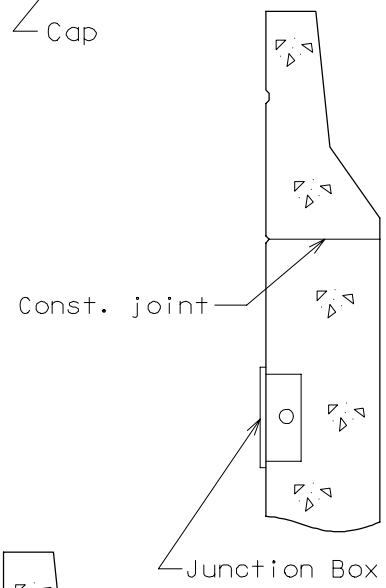

PART SECTION A-A

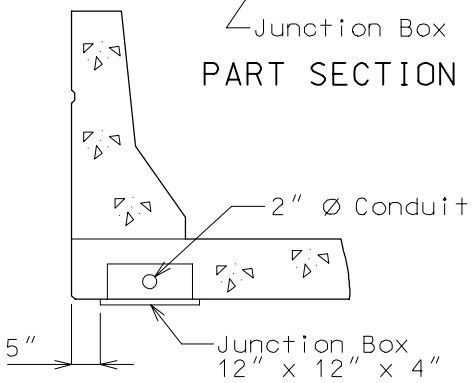

SECTION OF JUNCTION BOX IN SLAB

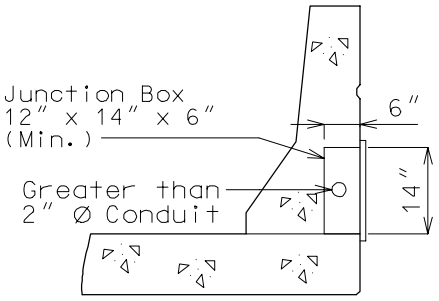

SECTION OF JUNCTION BOX IN BARRIER CURB

(Note: if multiple conduits, 4" Ø conduit not allowed in curb.)

HINGED BEAM CONNECTIONS

Longitudinal Diagrams

The following sheets showing diagrams of various joints in steel structures are intended to be guides primarily for the determination of horizontal longitudinal dimensions for the plan view on the first sheet of plans.

These diagrams are not to be detailed on the design plans. However, the arrangement of the joints should be useful in detailing the longitudinal diagram for structural steel, particularly for bridges on grades and vertical curves.

Longitudinal dimensions for the plan of structural steel and for the plan of slab shall be horizontal from ℄ bearing to ℄ bearing.

For proper correlation of details when developing plans for widening or redecking bridges, match the method of dimensioning on the new plans with the method used on the originals.

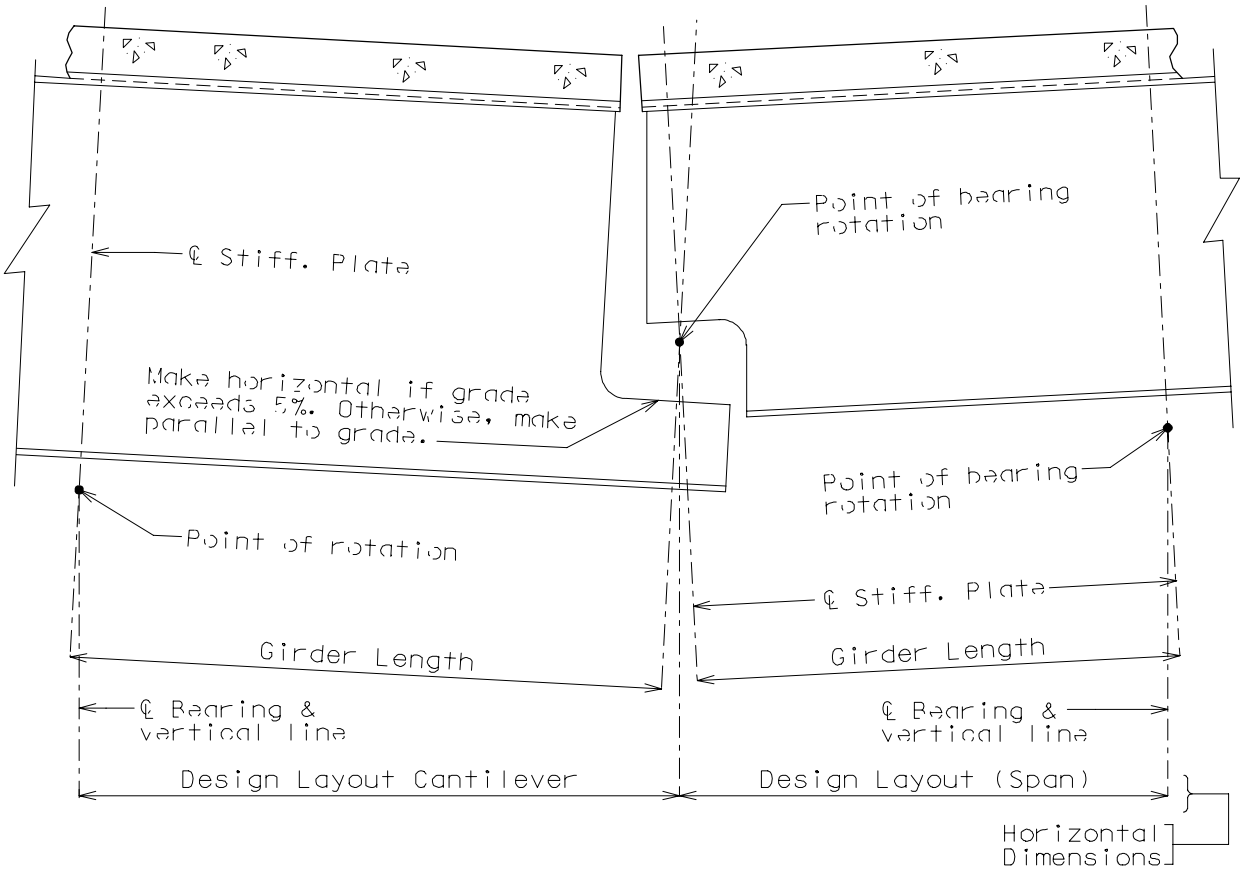

GEOMETRICS FOR HINGED BEAM CONNECTIONS
FOR BRIDGES ON SAG VERTICAL CURVES

HINGED BEAM CONNECTIONS (CONT.)

Longitudinal Diagrams

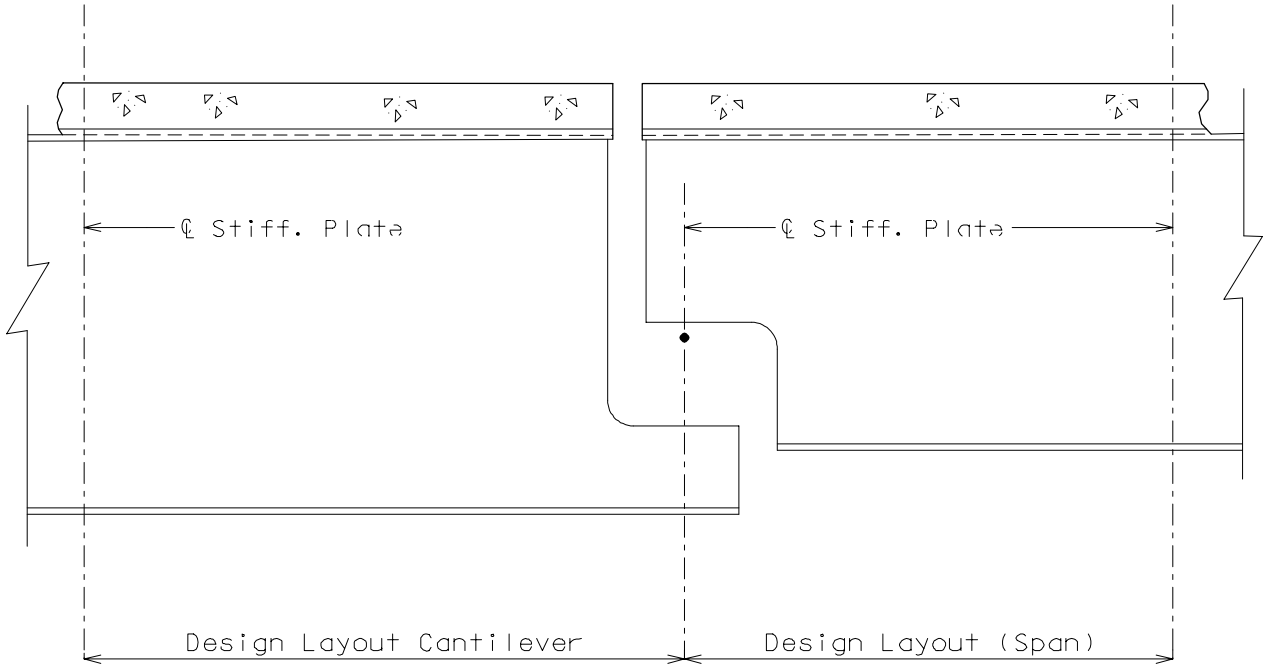

GEOMETRICS FOR HINGED BEAM CONNECTIONS
FOR BRIDGES ON FLAT GRADE

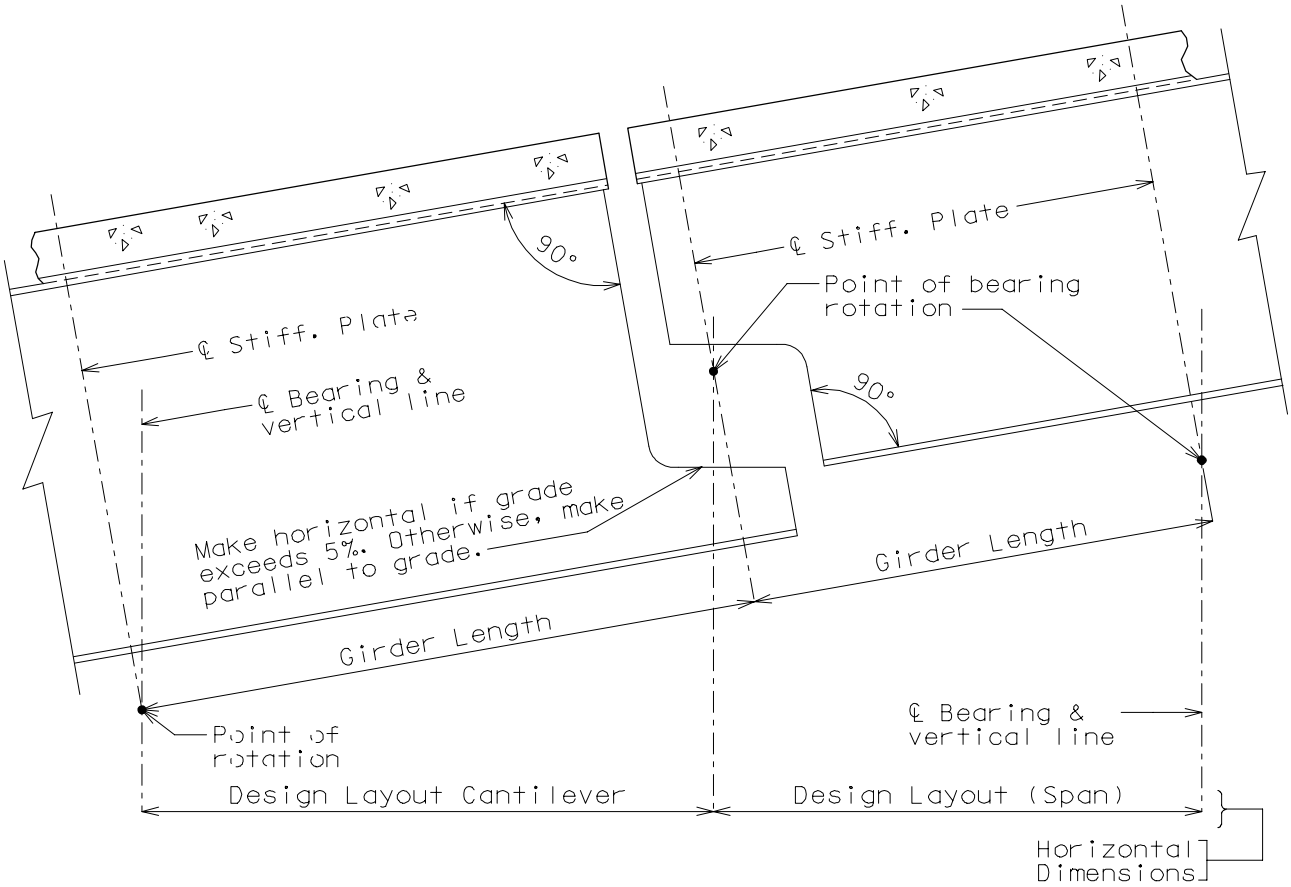

GEOMETRICS FOR HINGED BEAM CONNECTIONS
FOR BRIDGES ON STRAIGHT, PLUS GRADES

HINGED BEAM CONNECTIONS (CONT.)

Longitudinal Diagrams

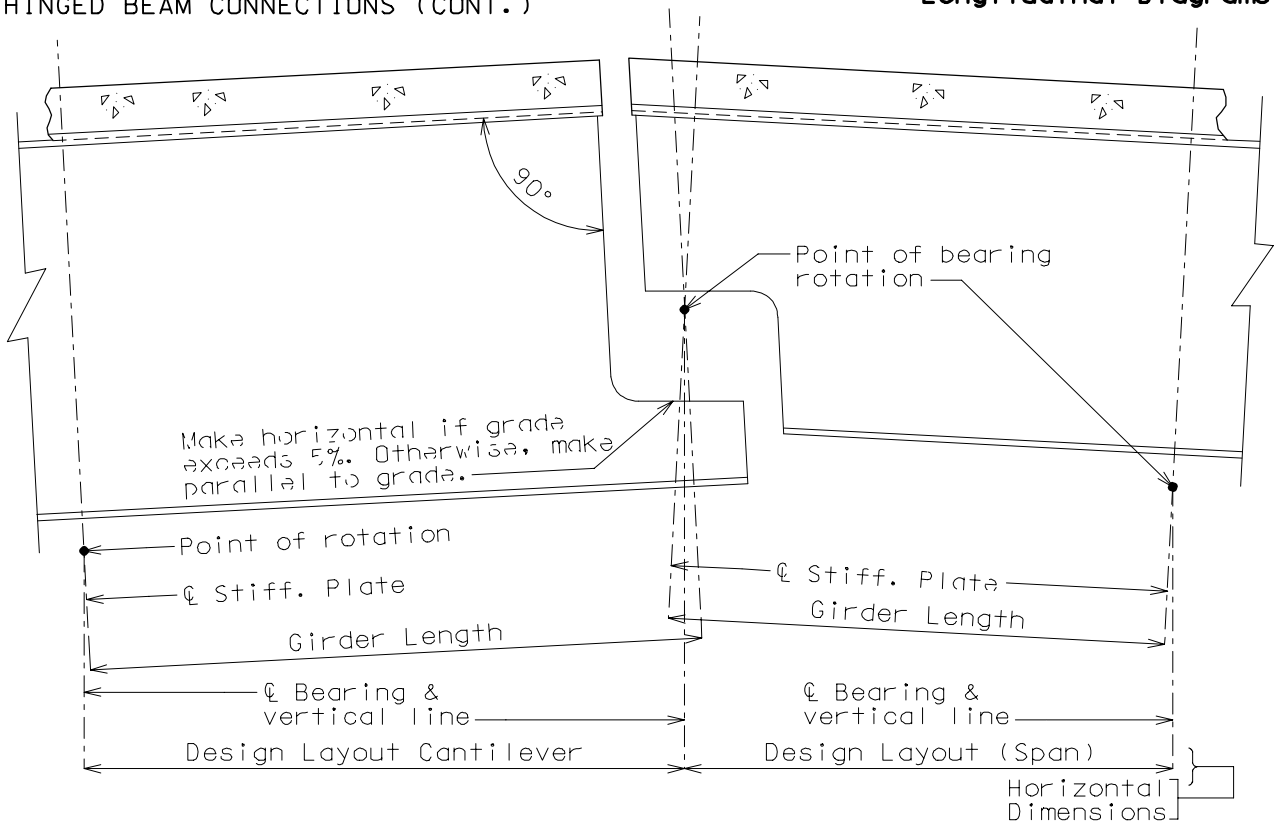

GEOMETRICS FOR HINGED BEAM CONNECTIONS
FOR BRIDGES ON CROWN VERTICAL CURVES

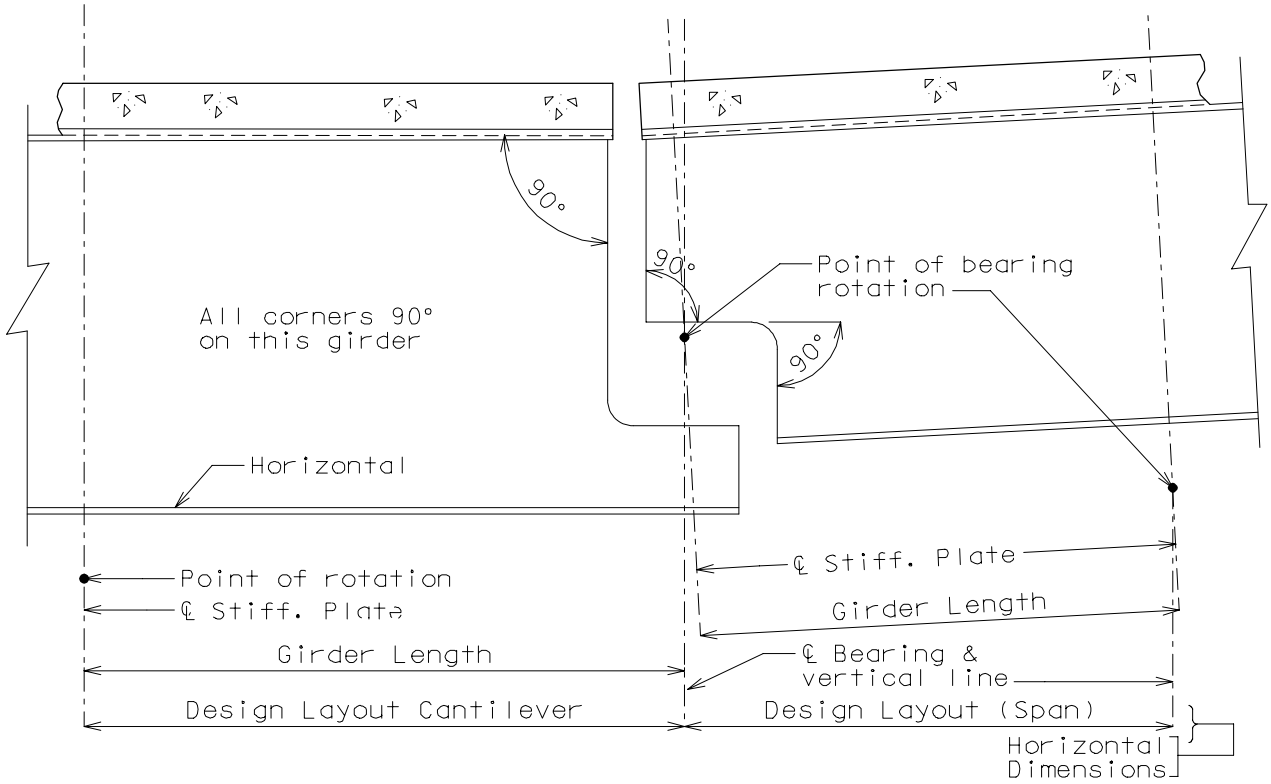

GEOMETRICS FOR HINGED BEAM CONNECTIONS
FOR BRIDGES ON SAG VERTICAL CURVES

HINGED BEAM CONNECTIONS (CONT.)

Longitudinal Diagrams

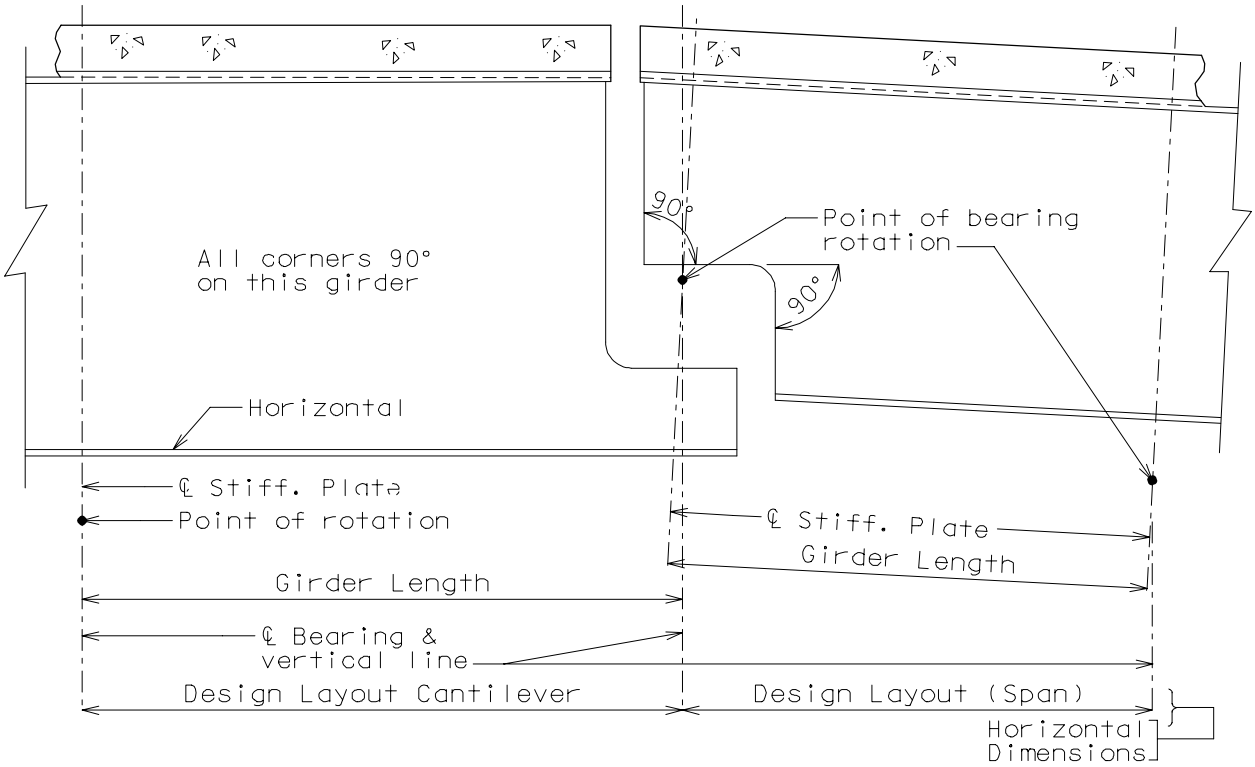

GEOMETRICS FOR HINGED BEAM CONNECTIONS
FOR BRIDGES ON SYMMETRICAL VERTICAL CURVES

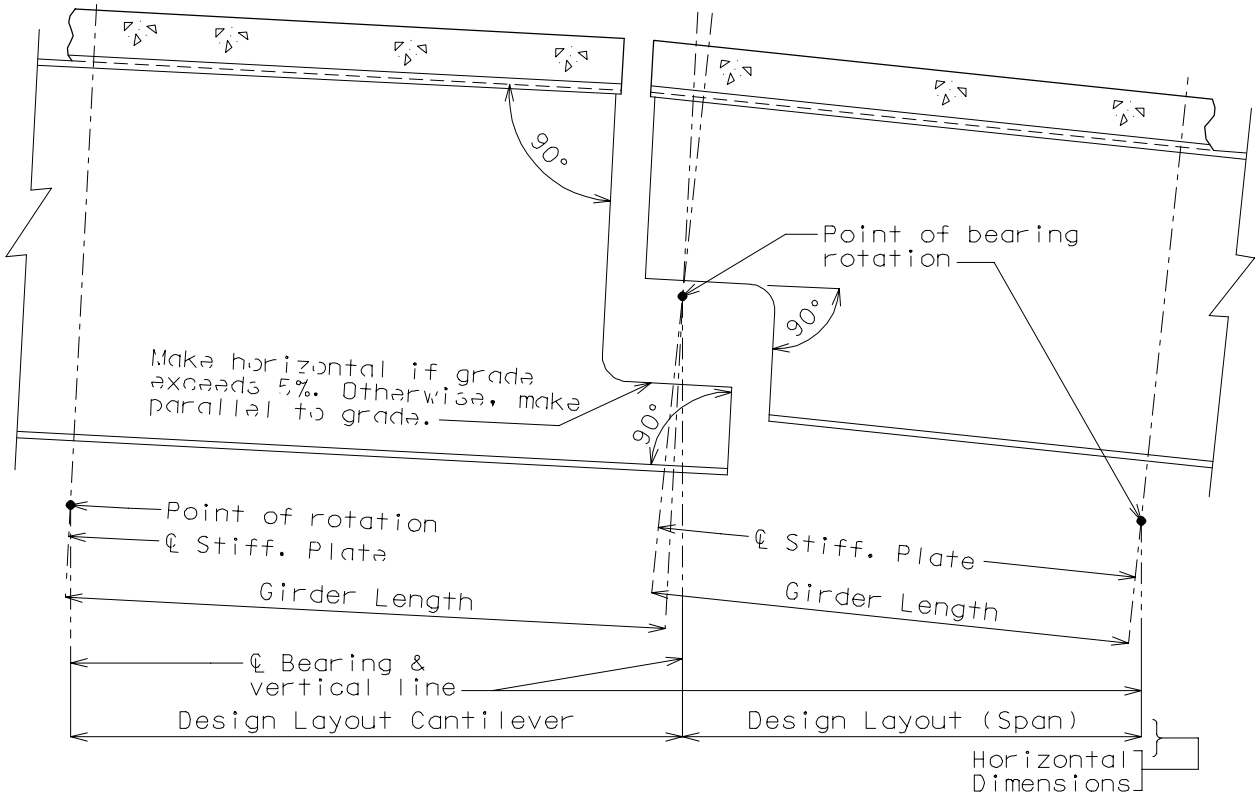

GEOMETRICS FOR HINGED BEAM CONNECTIONS
FOR BRIDGES ON CROWN VERTICAL CURVES

HANGER BEAM CONNECTIONS

Longitudinal Diagrams

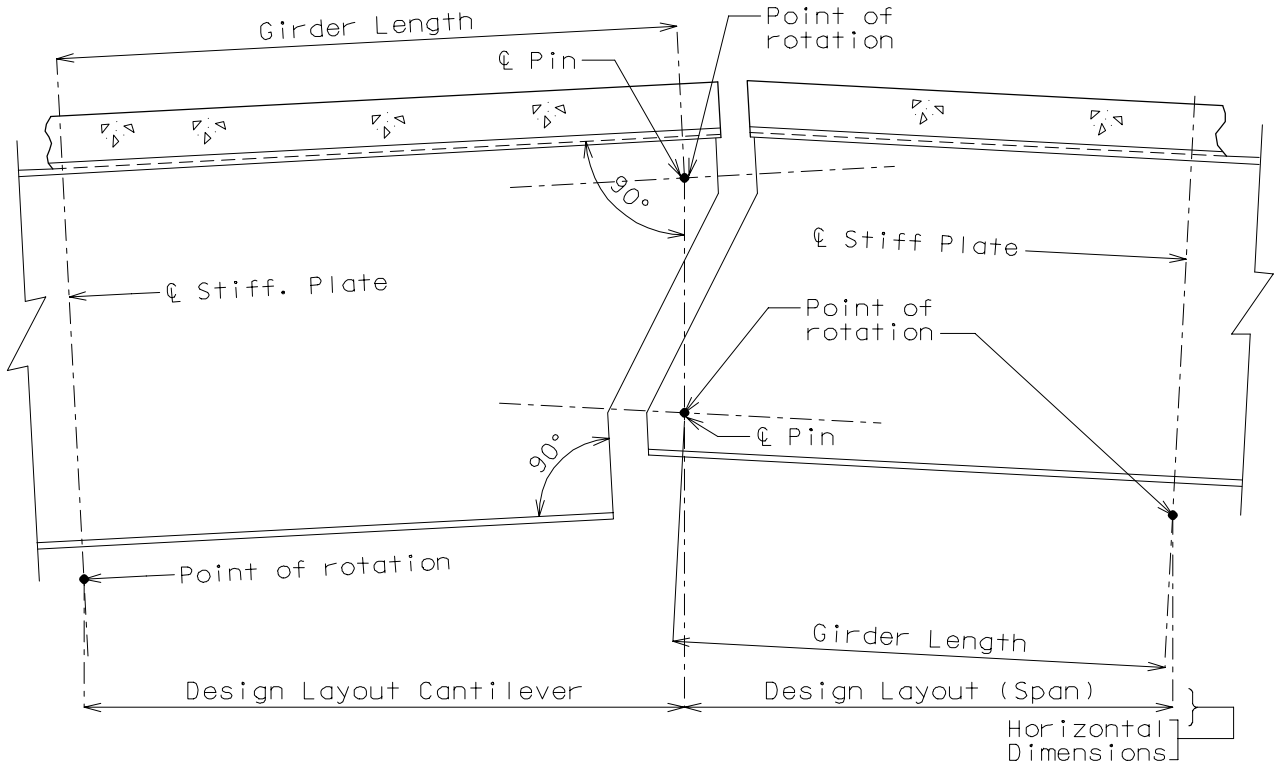

GEOMETRICS FOR HANGER BEAM CONNECTIONS
FOR BRIDGES ON CROWN VERTICAL CURVES

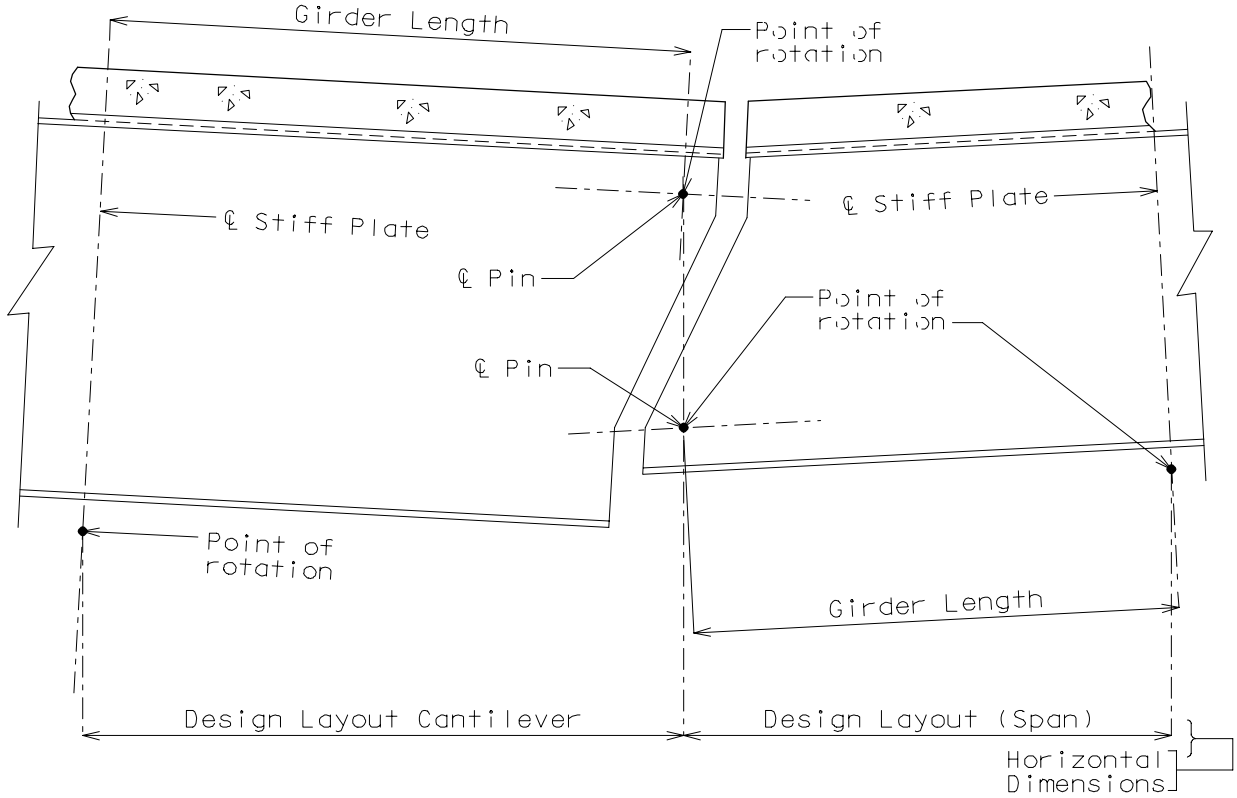

GEOMETRICS FOR HANGER BEAM CONNECTIONS
FOR BRIDGES ON SAG VERTICAL CURVES

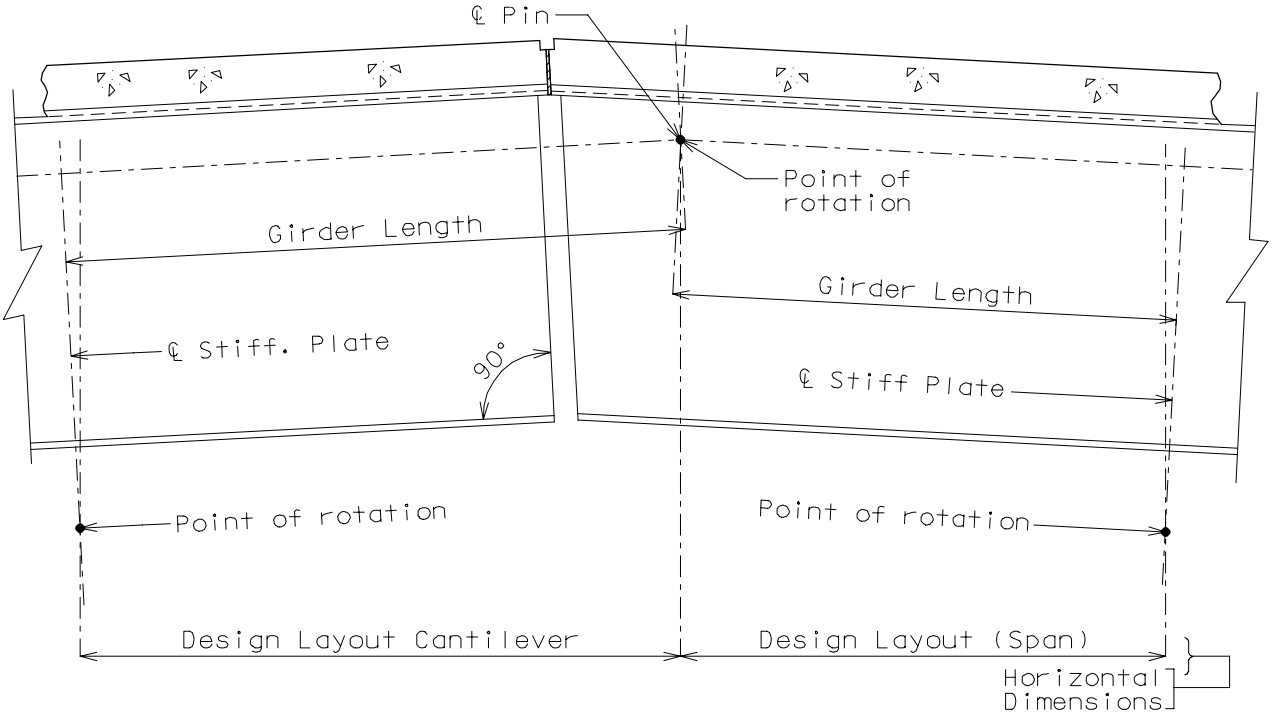

GEOMETRICS FOR PIN PLATE CONNECTIONS
FOR BRIDGES ON CROWN VERTICAL CURVES

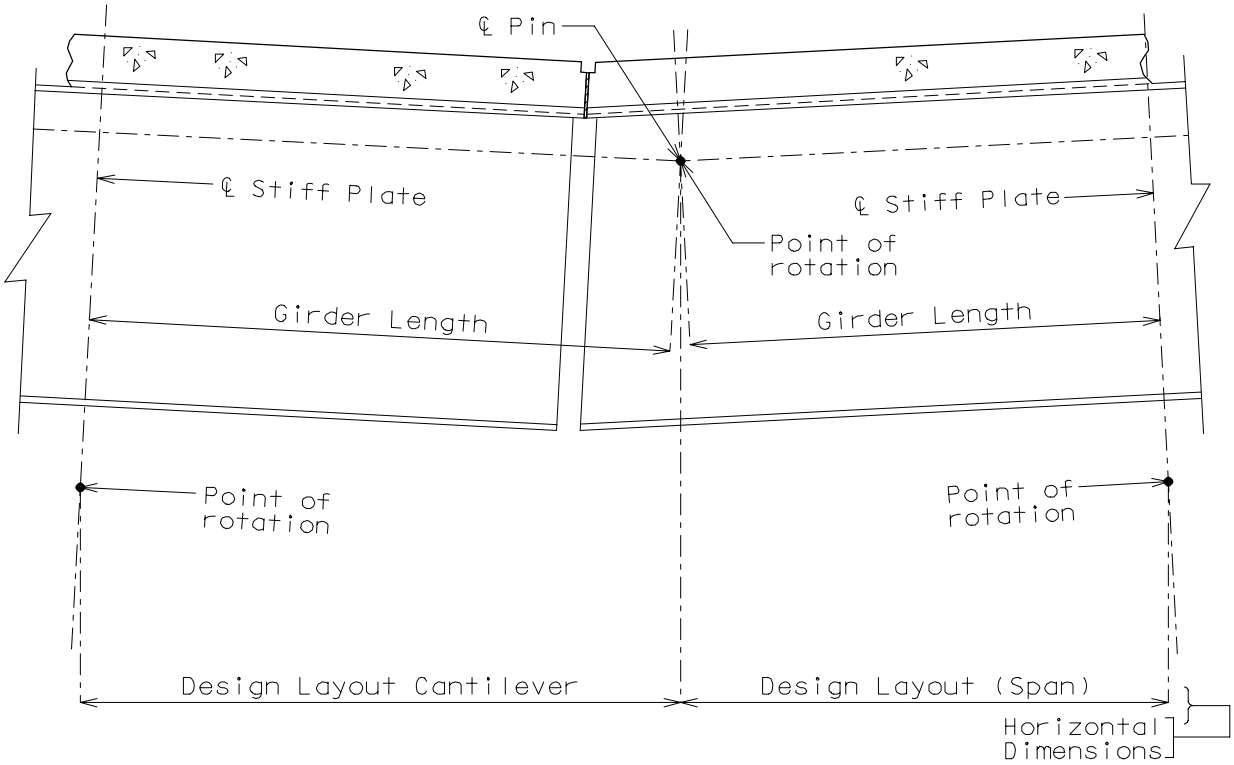

GEOMETRICS FOR PIN PLATE CONNECTIONS
FOR BRIDGES ON SAG VERTICAL CURVES

LONGITUDINAL SECTIONS (STEEL STRUCTURES)
EXPANSION DEVICE AT END BENT

Longitudinal Diagrams

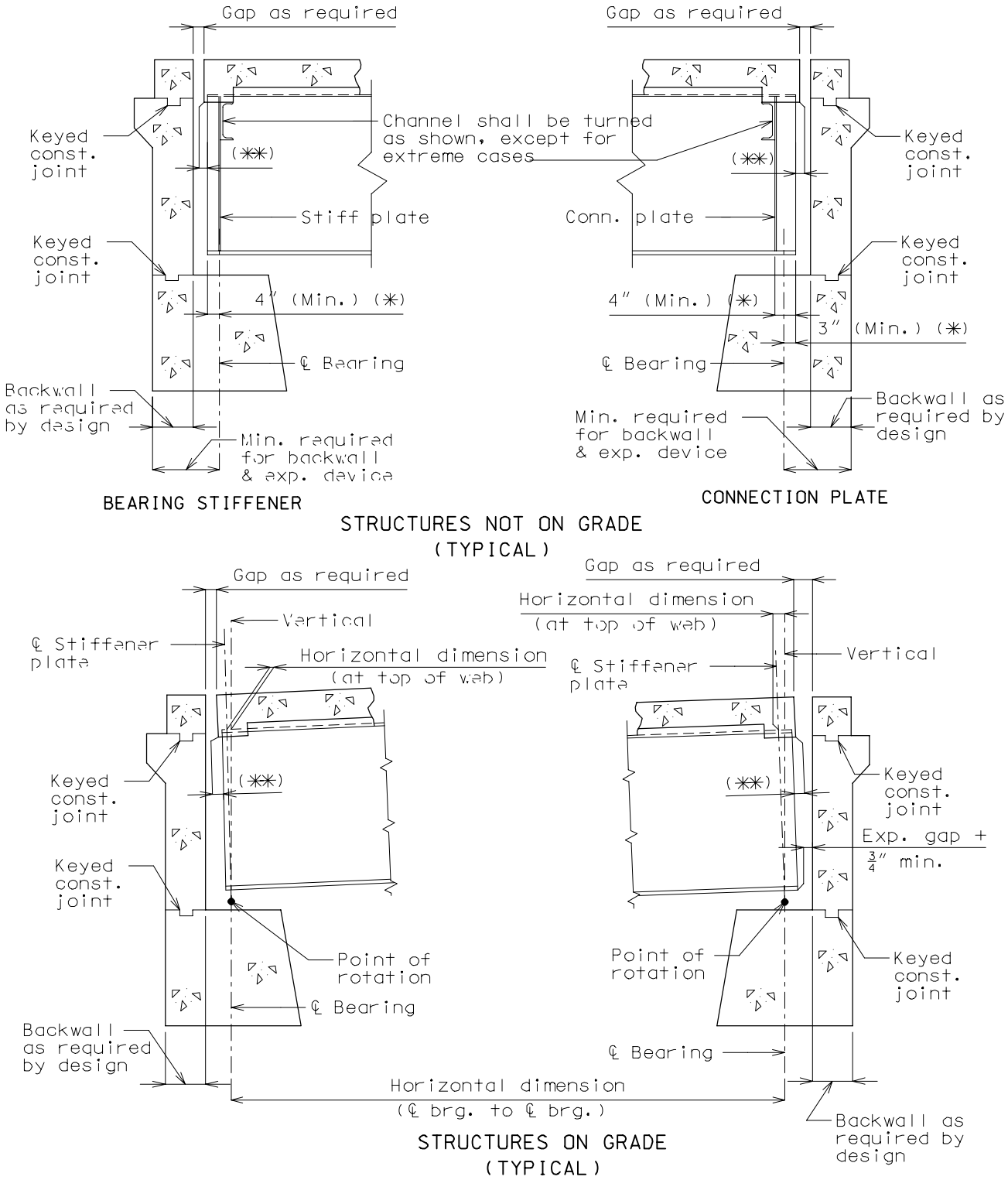

(✱) Parallel to Girder. All other dimensions shown are normal to backwall.

(✱✱) See Bridge Manual Expansion Device Section (3.35) for dimension of overhang from end of stringer or girder to face of plate, edge of concrete or face of vertical leg of angle.

LONGITUDINAL SECTIONS (STEEL STRUCTURES) (CONT.) **Longitudinal Diagrams**

NO EXPANSION DEVICES AT END BENT

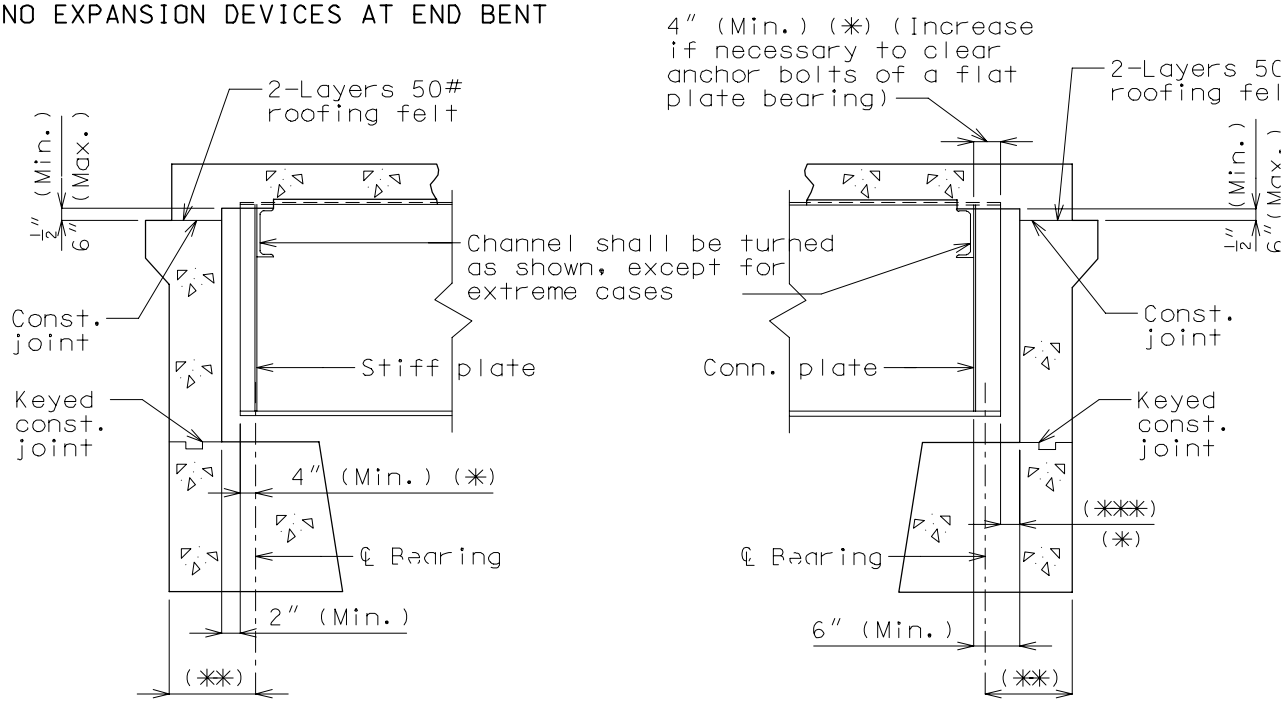

BEARING STIFFENER

CONNECTION PLATE

STRUCTURES NOT ON GRADE
(TYPICAL)

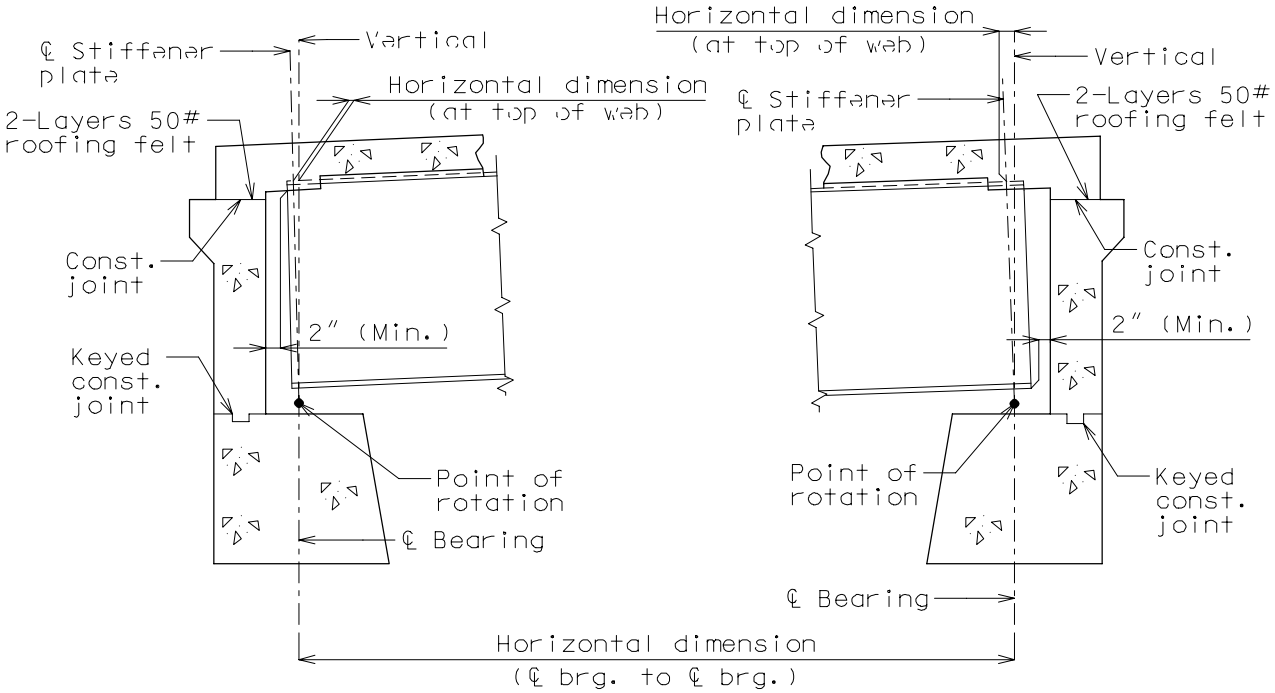

STRUCTURES ON GRADE
(TYPICAL)

(✳) Parallel to Girder. All other dimensions shown are normal to backwall.

(✳✳) 18" min. (Use same dimension as the expansion device end on 3-span continuous, if it is not more than 2" greater.)

(✳✳✳) 3" min. for type C, D and E bearing, and 2" min. for an elastomeric bearing.

LONGITUDINAL SECTIONS (STEEL STRUCTURE) (CONT.)
INTERMEDIATE BENT

Longitudinal Diagrams

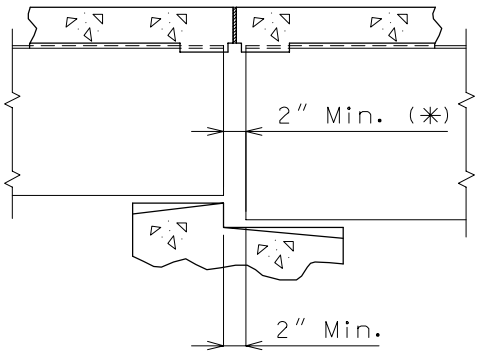

NO EXPANSION DEVICE

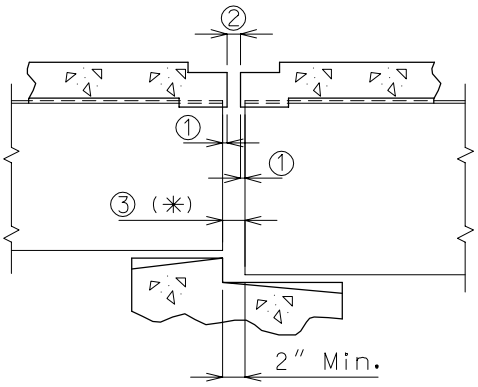

EXPANSION DEVICE

① 1/2″ minimum overhang from end of stringer to face of plate, edge of concrete or face of vertical leg of angle.
② Gap as required for a particular type of expansion device.
③ Expansion device gap plus 1-1/2″ minimum (taken parallel to ℄ stringer).

(✳) Parallel to Girder. All other dimensions shown are normal to ℄ Bent.

Blockout shown is for Elastomeric Expansion Joint Seal. Check Design Layout for type of device for a particular structure.

LONGITUDINAL SECTIONS (PRESTRESSED STRUCTURE)
EXPANSION DEVICE AT ANY BENT

Longitudinal Diagrams

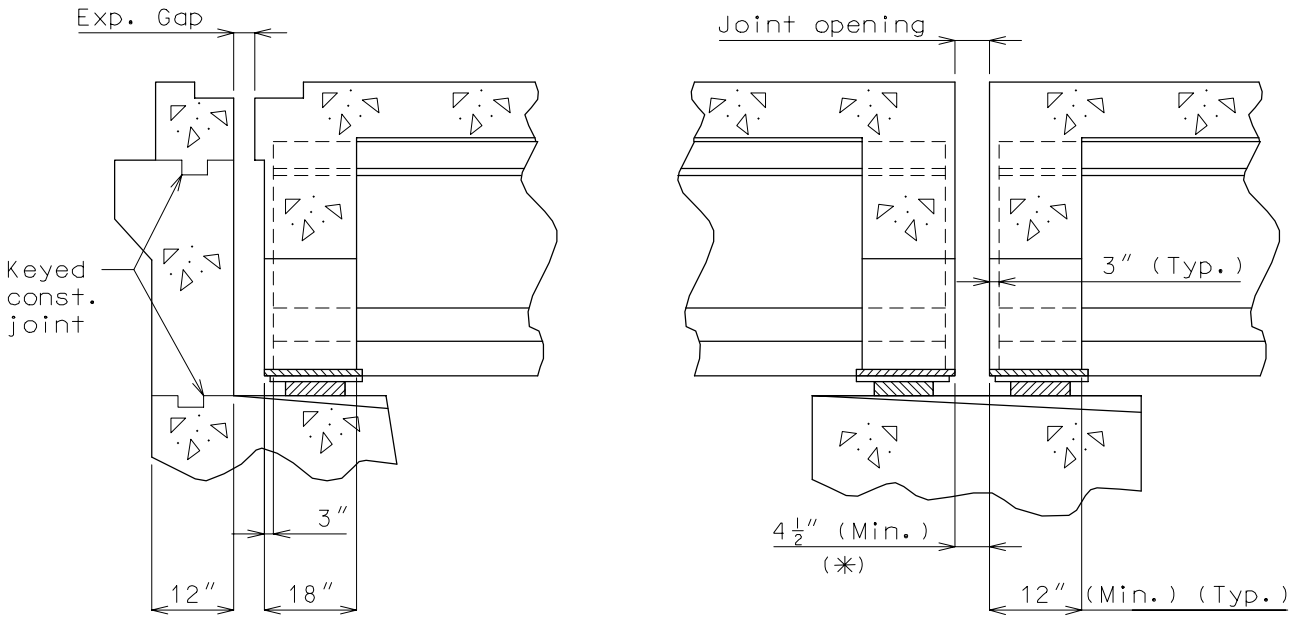

STRUCTURES NOT ON GRADE
(TYPICAL)

(✳) Parallel to Girder. All other dimensions shown are normal to ℄ Bent.

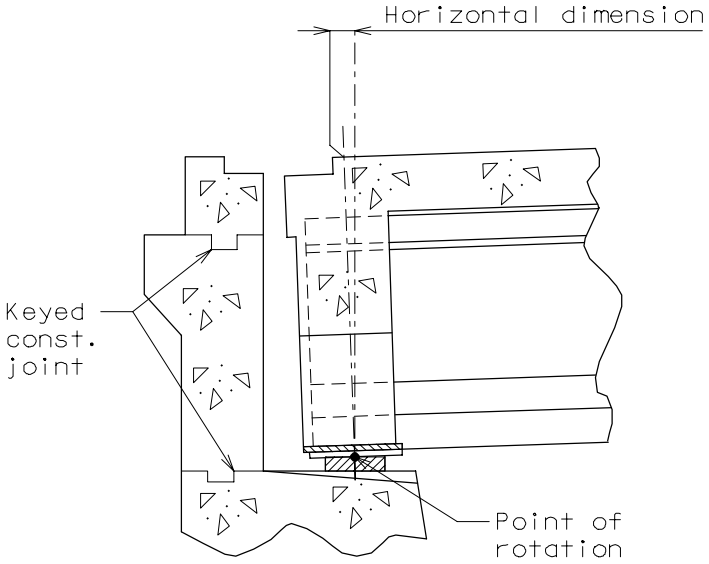

STRUCTURES ON GRADE
(TYPICAL)

LONGITUDINAL SECTIONS
POINT OF ROTATION OF BEARINGS

Longitudinal Diagrams

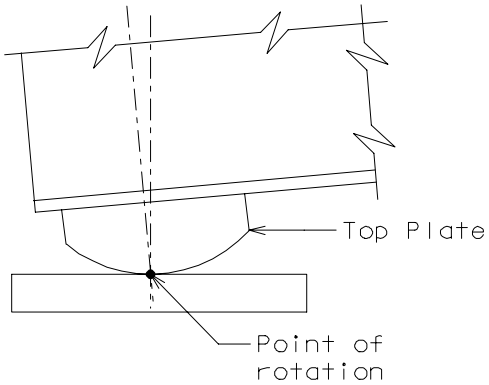

TYPE "C" BEARING

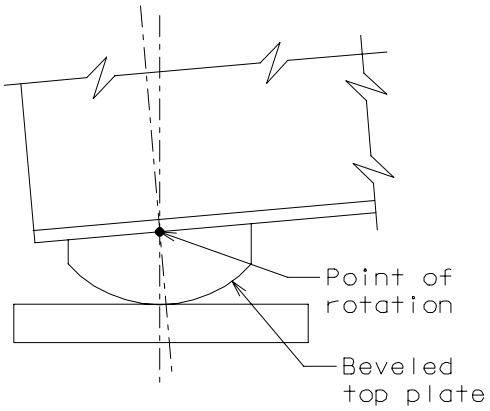

TYPE "C" BEARING
(GRADE 4% AND GREATER)

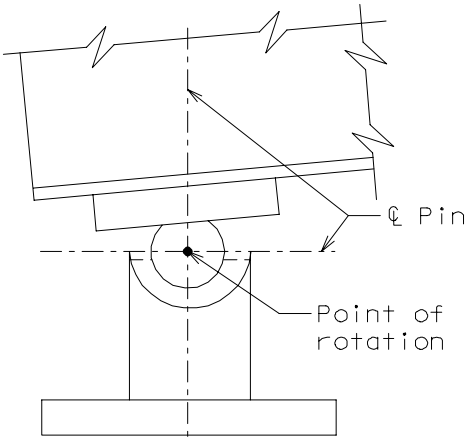

TYPE "D" BEARING

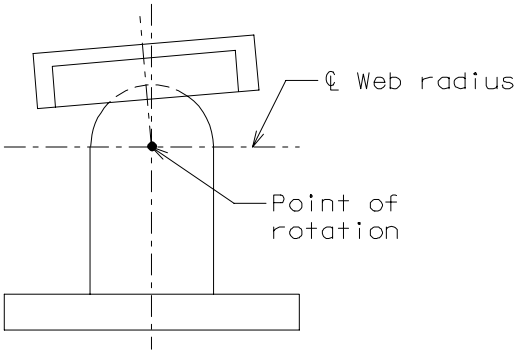

TYPE "E" BEARING

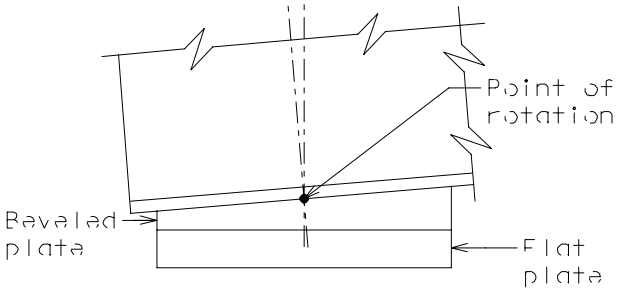

FLAT PLATE BEARING
(FOR GRADE 2% AND GREATER)

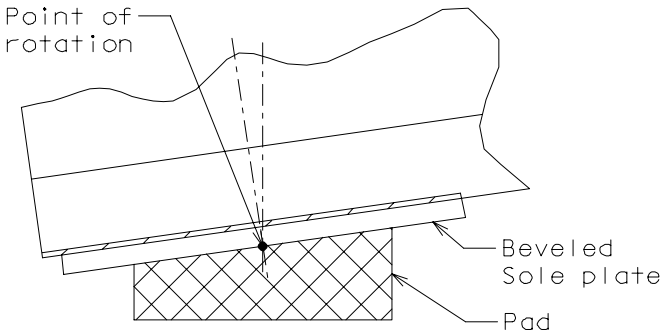

PRESTRESSED STRUCTURE
BEARING PAD

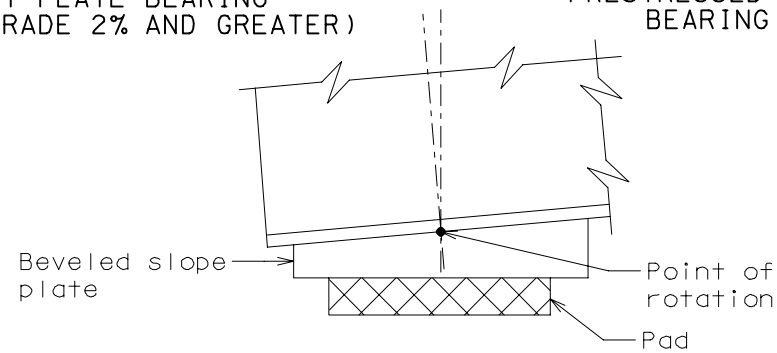

STEEL STRUCTURE
BEARING PAD

LONGITUDINAL SECTIONS
BLOCKING DIAGRAM

Longitudinal Diagrams

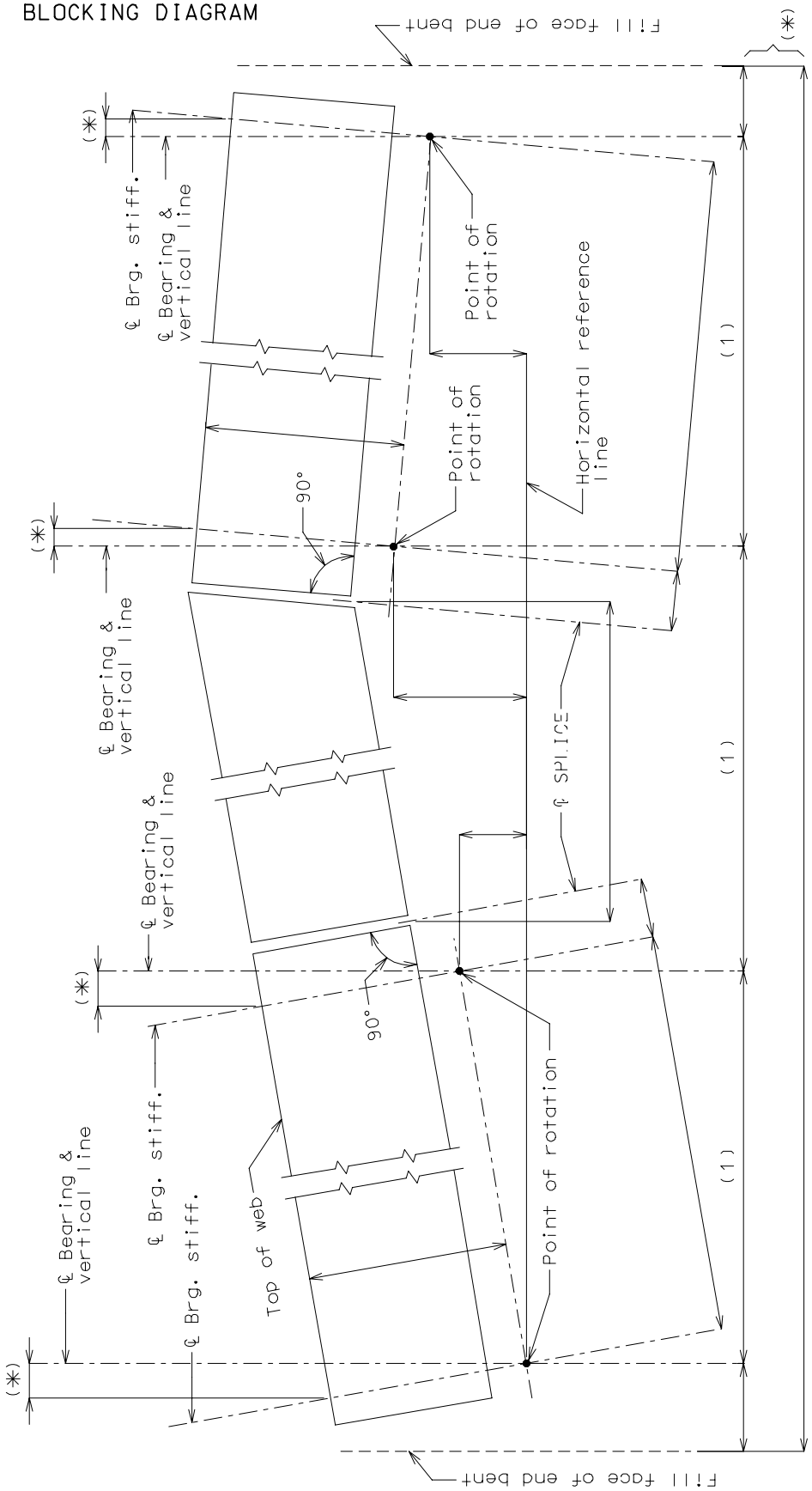

ELEVATION OF LONGITUDINAL STEEL DIAGRAM

Note:
The typical elevation shown above should be detailed on the plans for all steel structures that are on vertical curve grades.

See Bridge Manual Section 4-H for the appropriate notes to be placed on the bridge plans.

(1) Longitudinal dimensions are horizontal from ℄ Brg. to ℄ Brg.

(*) Horizontal dimensions.

BLOCKING DIAGRAM SHOULD NOT BE USED FOR CAMBERED GIRDERS.

TYPICAL DETAILS OF "HINGED" CONNECTION

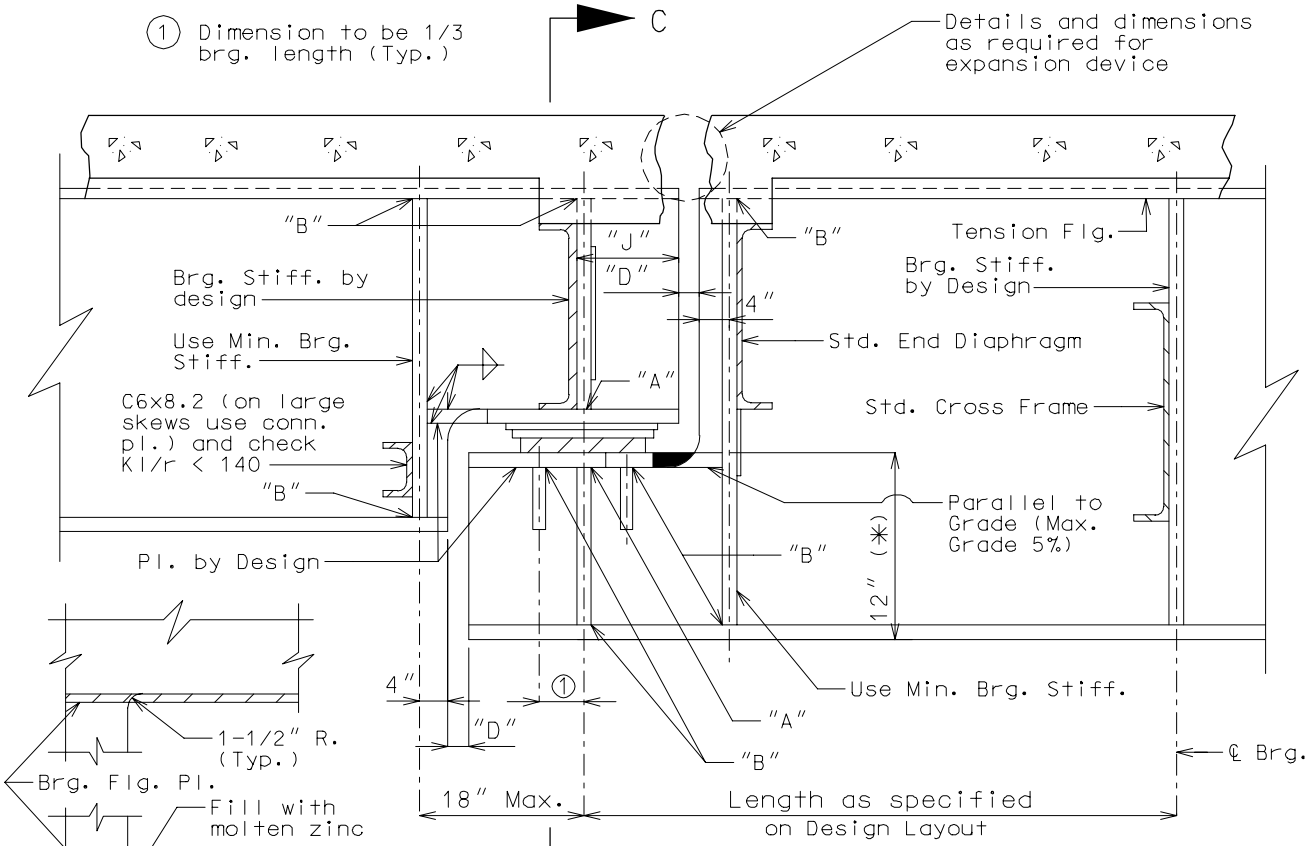

SECTION SHOWING HINGED BEAM CONN.

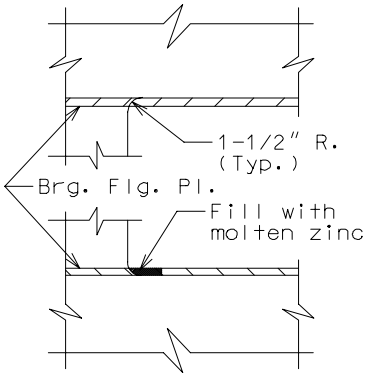

DETAIL OF WEB AT RADIUS TRANSITION

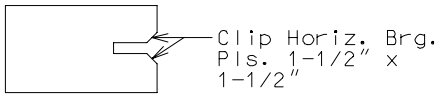

PLAN OF BRG. PLATE

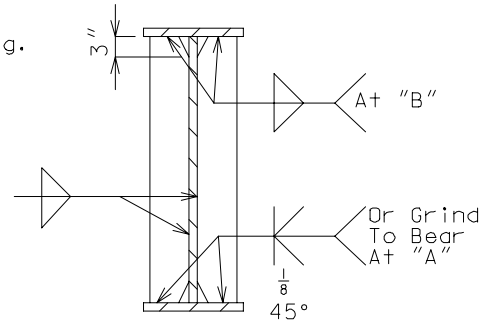

TYPICAL WELDING DETAILS FOR STIFF. PLATES

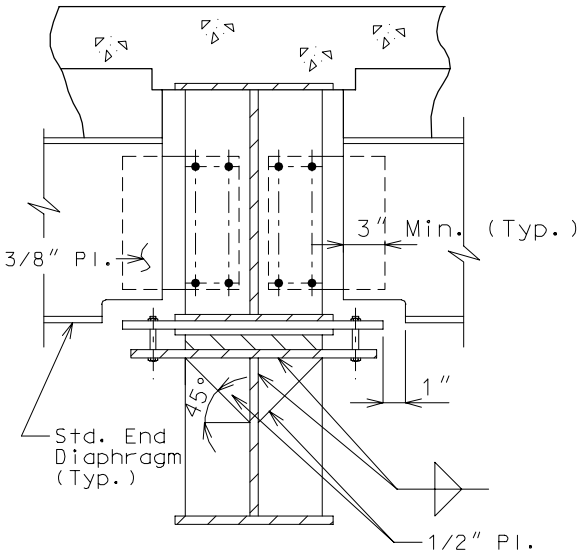

SECTION C-C

"D" - Gap as required for expansion (3" Min.)
"J" - 5" for bearing with 3" web thickness. Use 6" for all others.

(✳) To be used unless greater depth is required by design.

Note: Web thickness and size of fillet weld connecting bearing stiffener plate to web as required by design.

Plans for bridges on a grade or vertical curve shall have the conn. detailed in relation to the slope of the girders and stringers.

See Section 3.31 for details of Neoprene or PTFE Bearings.

TYPICAL DETAILS OF "HINGED" CONNECTION (CONT.)

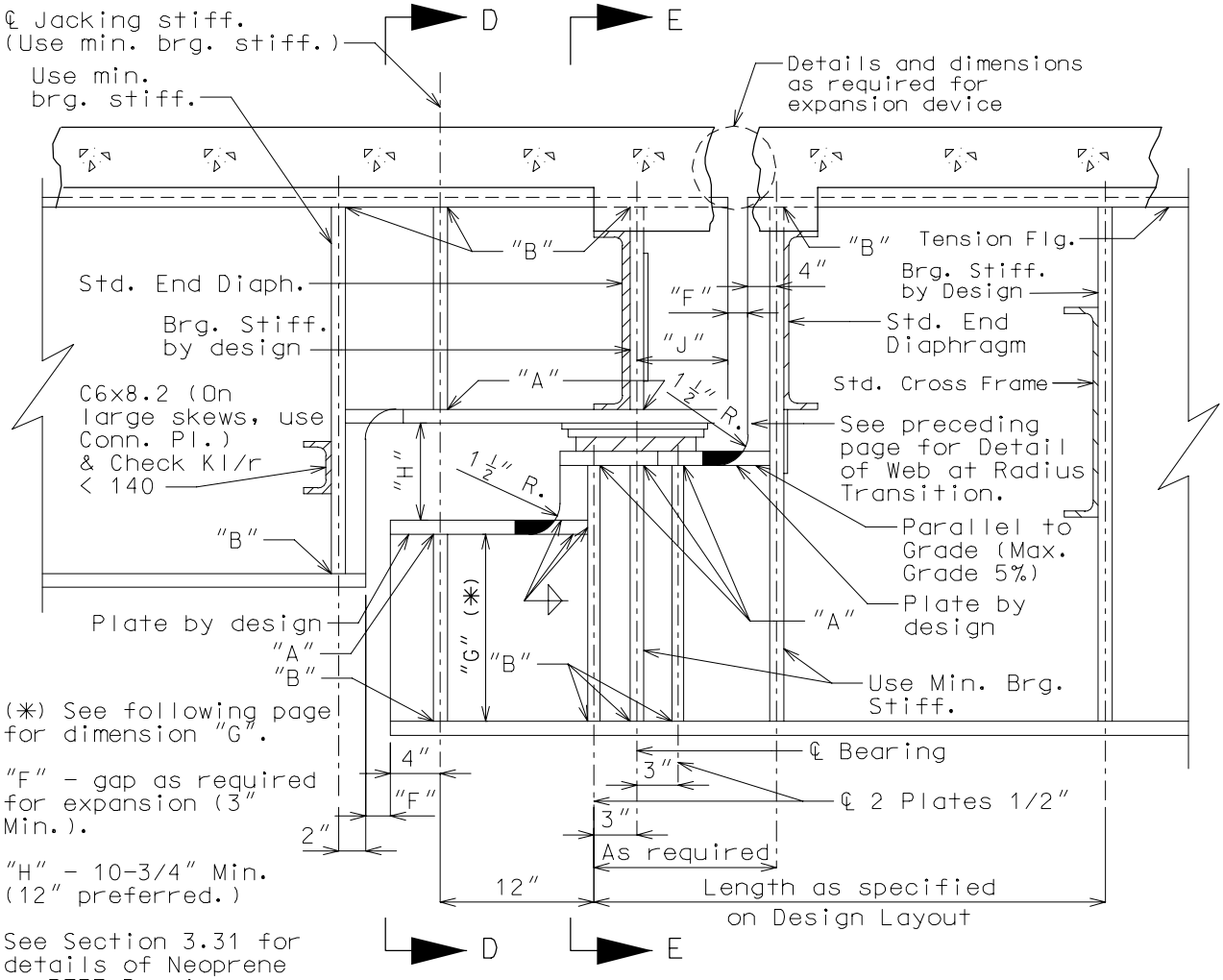

SECTION SHOWING HINGED BEAM CONN.

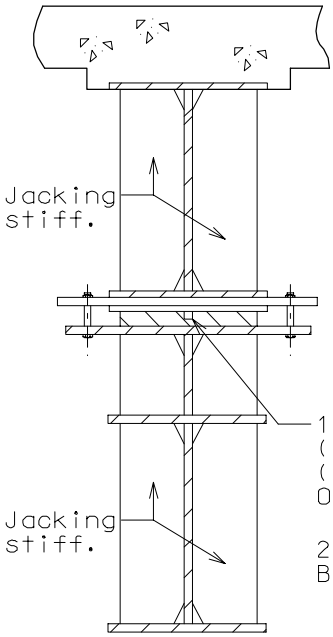

SECTION D-D

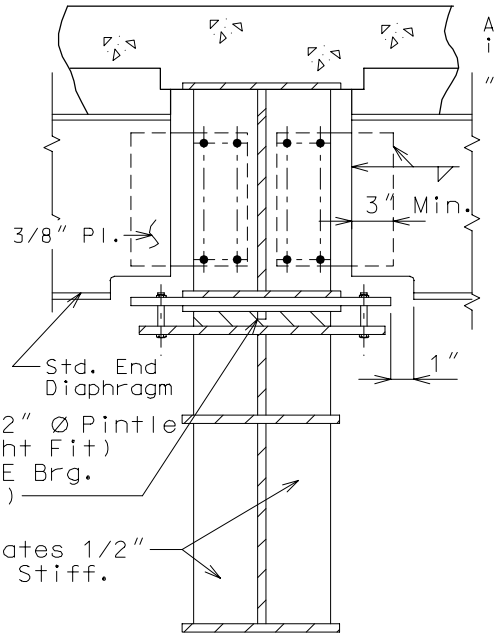

SECTION E-E

All dimensions shown are minimum, increase, as necessary.

"J" = 5" for bearing with 3" web thickness. Use 6" for all others.

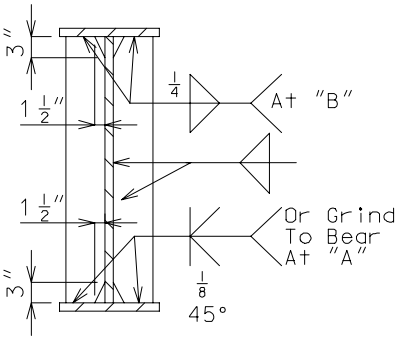

TYPICAL WELDING DETAILS
FOR STIFF. PLATES

TYPICAL DETAILS OF "HINGED" CONNECTION (CONT.)

ALLOWABLE DEAD LOAD REACTIONS FOR VARIOUS DEPTHS OF "G"
(See preceding page for "G")

WEB THICKNESS	DEPTH "G"	(✳) ALLOWABLE DEAD LOAD REACTIONS, KIPS (AT 150 % OVERSTRESS)	WEB THICKNESS	DEPTH "G"	(✳) ALLOWABLE DEAD LOAD REACTIONS, KIPS (AT 150 % OVERSTRESS)
5/16"	8"	45.0	7/16"	8"	63.0
5/16"	9"	50.6	7/16"	9"	70.8
5/16"	10"	56.2	7/16"	10"	78.7
5/16"	11"	61.8	7/16"	11"	86.6
5/16"	12"	67.5	7/16"	12"	94.5
5/16"	13"	73.1	7/16"	13"	102.3
5/16"	14"	78.8	7/16"	14"	110.2
5/16"	15"	84.3	7/16"	15"	118.1
3/8"	8"	54.0	1/2"	8"	72.0
3/8"	9"	60.7	1/2"	9"	81.0
3/8"	10"	67.5	1/2"	10"	90.0
3/8"	11"	74.2	1/2"	11"	99.0
3/8"	12"	81.0	1/2"	12"	108.0
3/8"	13"	87.7	1/2"	13"	117.0
3/8"	14"	94.5	1/2"	14"	126.0
3/8"	15"	101.2	1/2"	15"	135.0

(✳) No (Live load + impact) excluded.

TYPICAL DETAILS OF "HINGED" CONNECTION (CONT.)

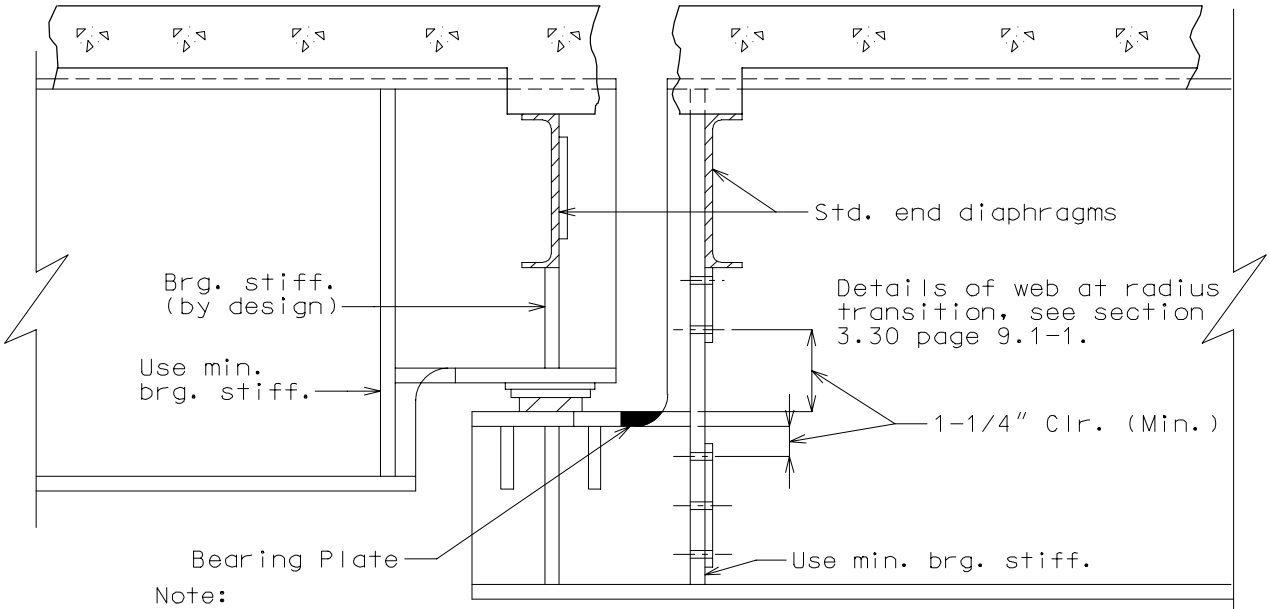

Note:
For details and dimensions not shown, see Section 3.42.
See Section 3.31 for details of Neoprene or PTFE Bearings.

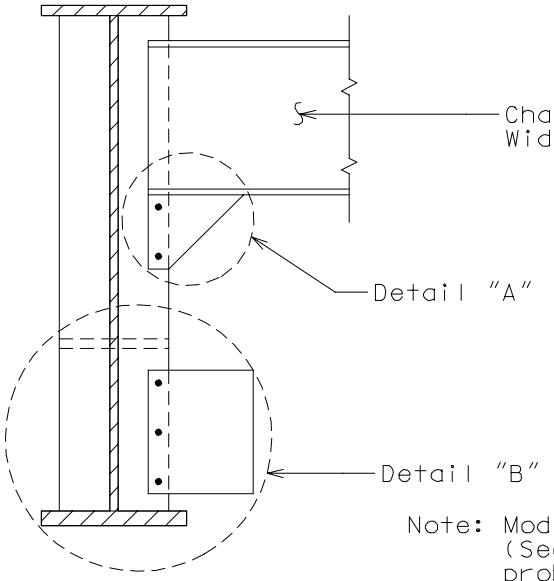

PLATE GIRDER 42" THRU 46".
ALSO, 48" AND OVER

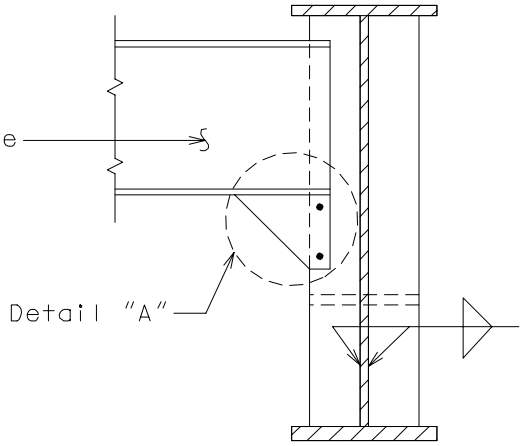

PLATE GIRDER 36" THRU 40"

Note: Modify standard end diaphragm connections (Section 3.42), as shown below, if clearance problems exist between bearing plate and end diaphragm connection bolts.

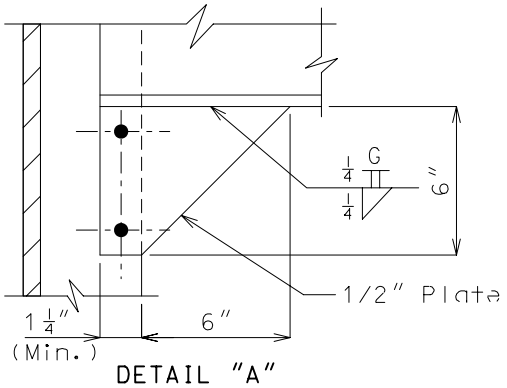

DETAIL "A"

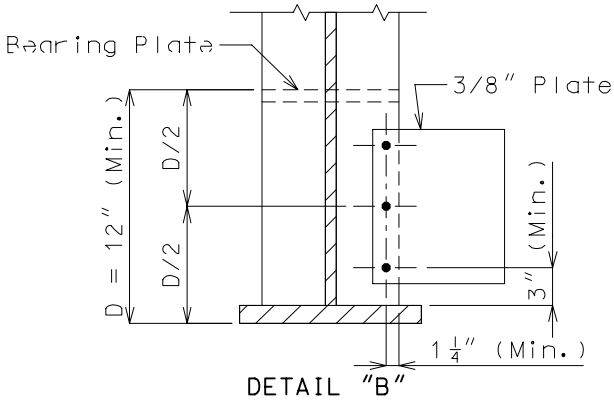

DETAIL "B"

PEDESTRIAN OVERPASS (GALVANIZED STEEL) **Chain Link Fence**

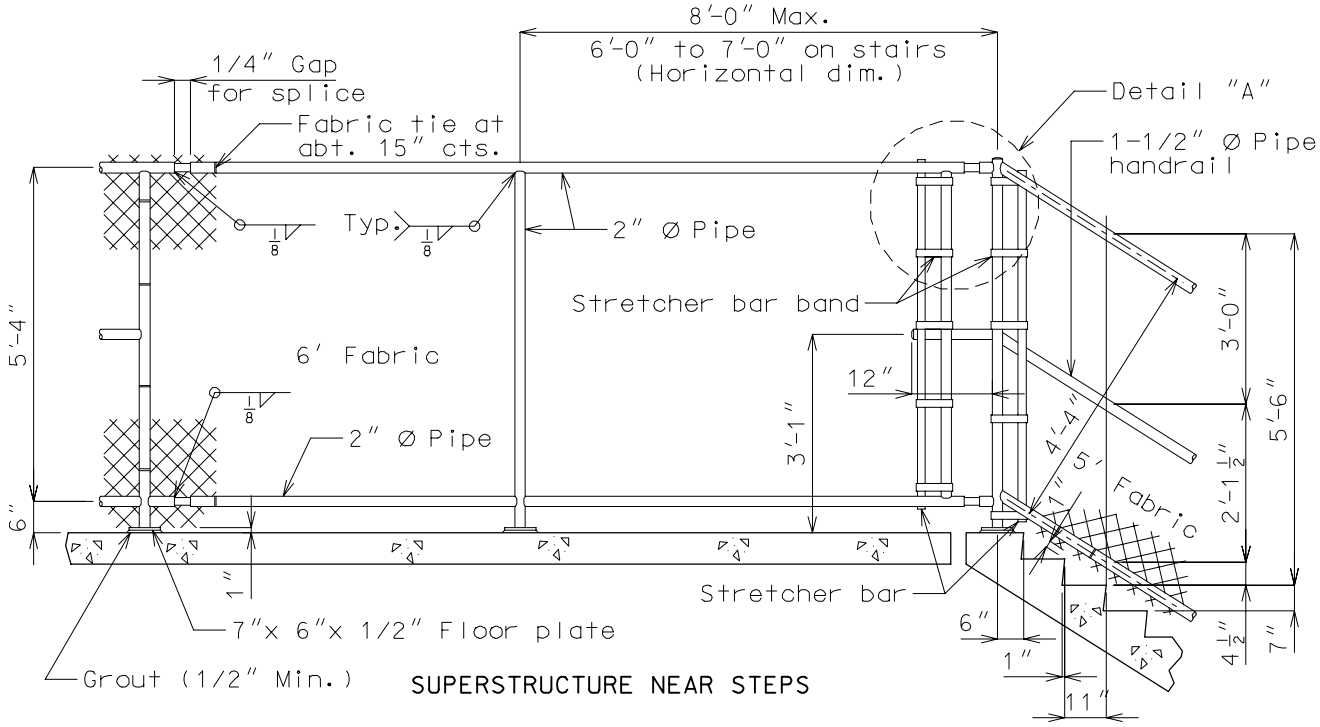

SUPERSTRUCTURE NEAR STEPS

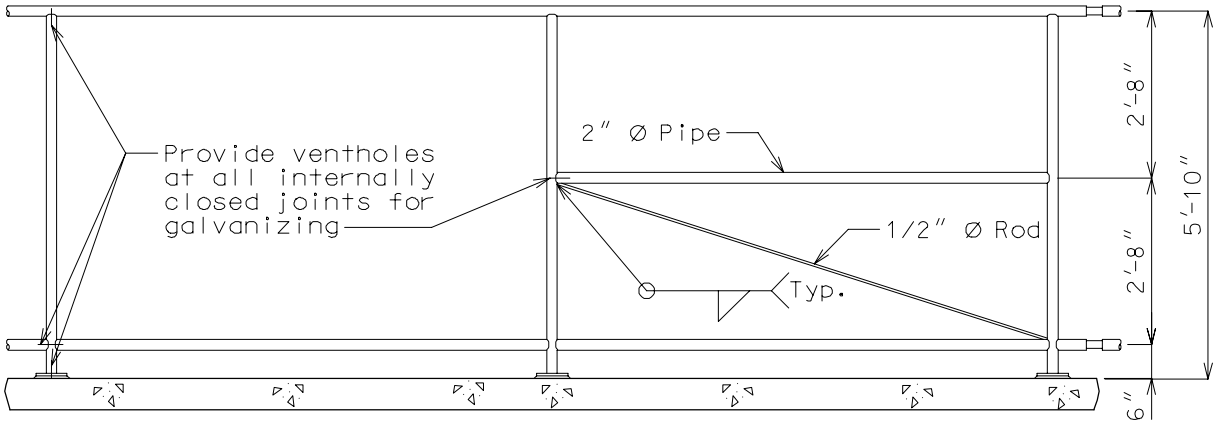

SUPERSTRUCTURE AT OR NEAR END PANEL

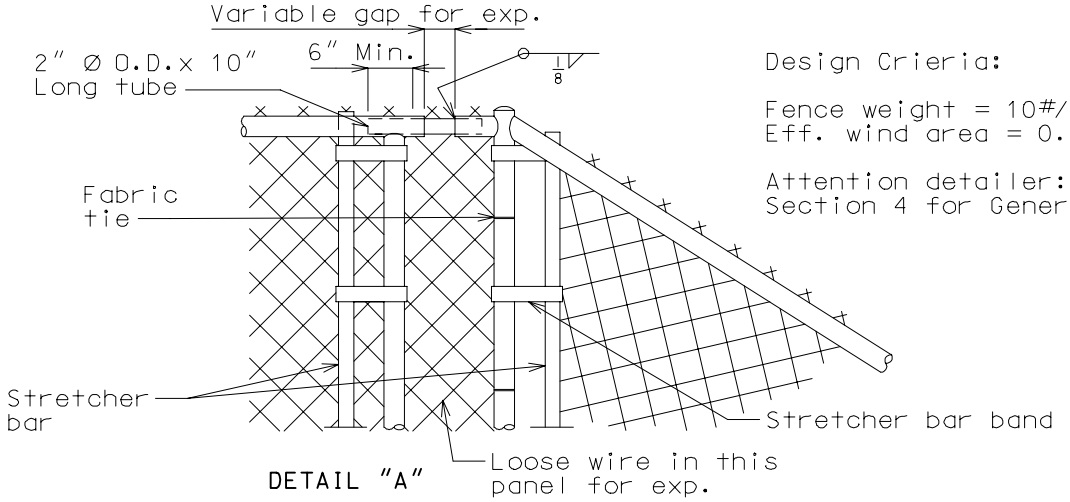

DETAIL "A"

Design Crieria:

Fence weight = 10#/lin.ft.
Eff. wind area = 0.11 area/sq.ft.

Attention detailer: see
Section 4 for General Notes.

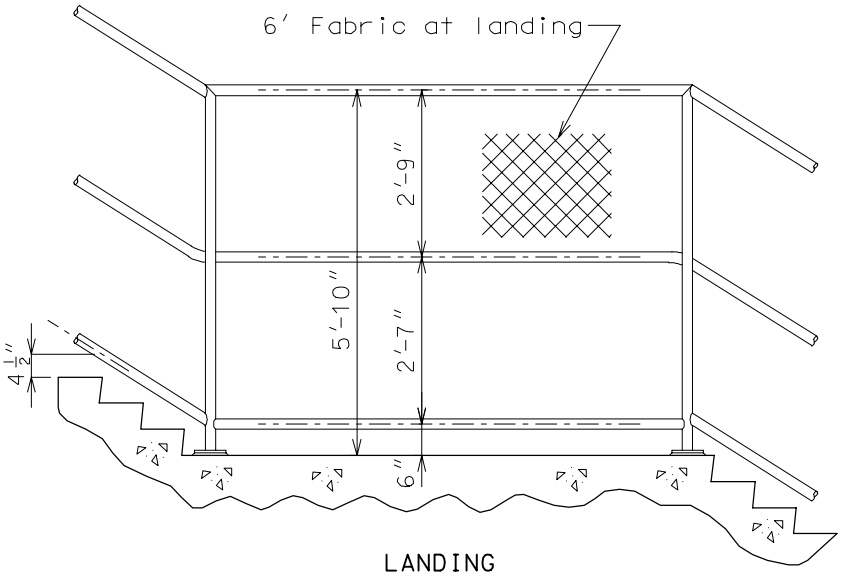

LANDING

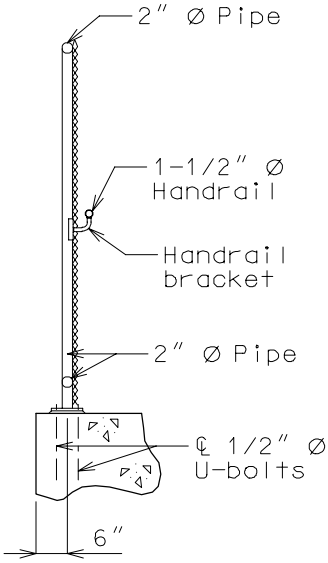

SECTION THRU FENCE

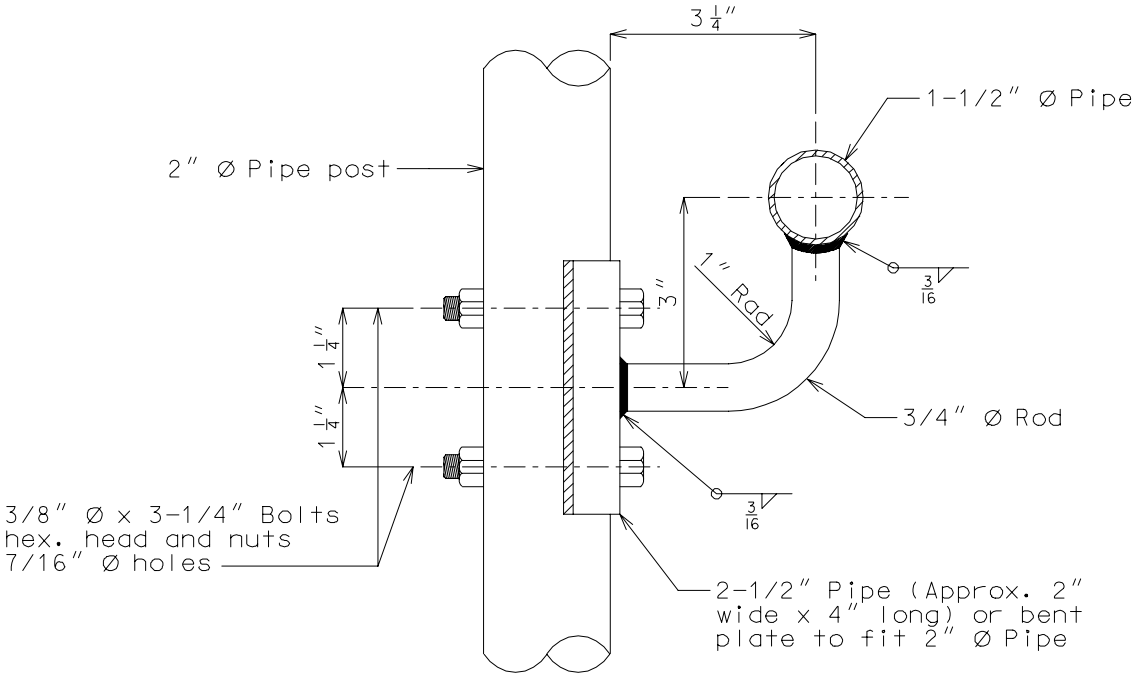

DETAILS OF HANDRAIL BRACKET

PEDESTRIAN OVERPASS (CONT.)
FLOOR PLATE (GALVANIZED STEEL)

Chain Link Fence

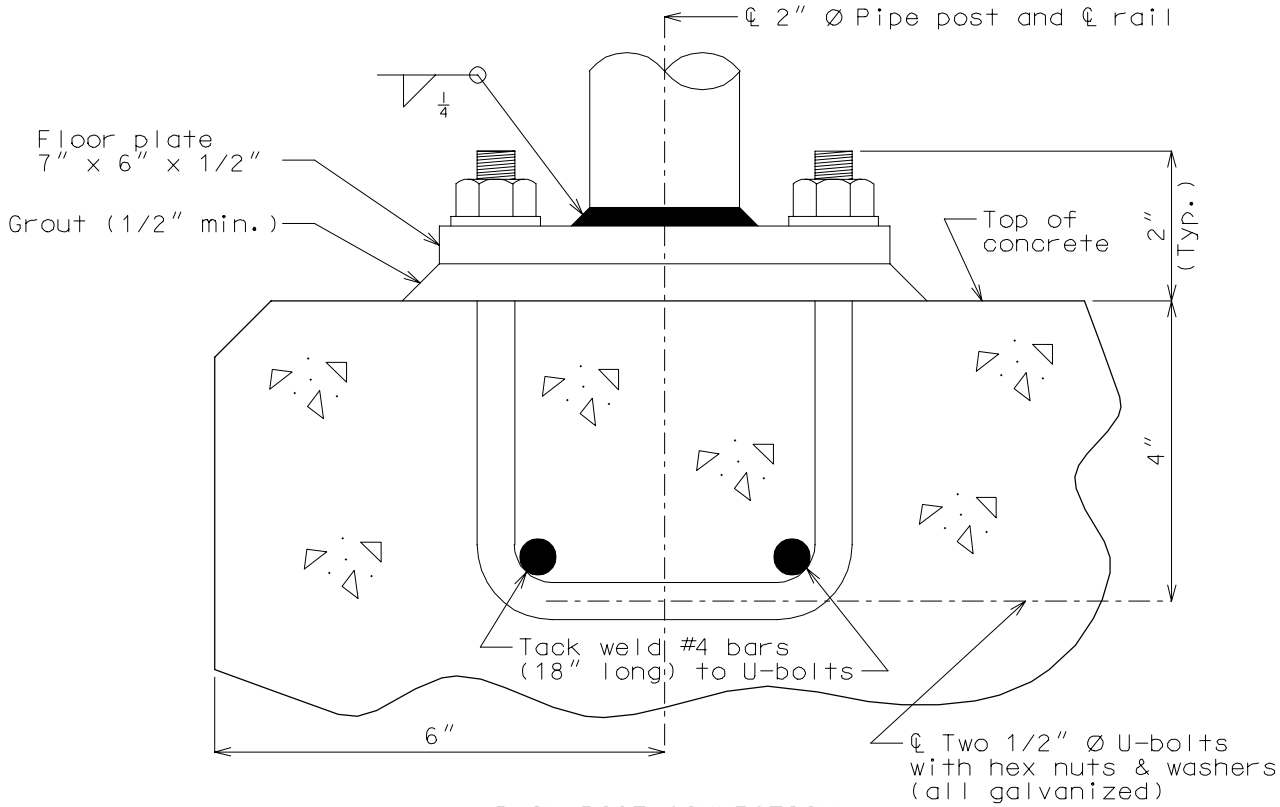

RAIL POST CONNECTION
(TYPICAL)

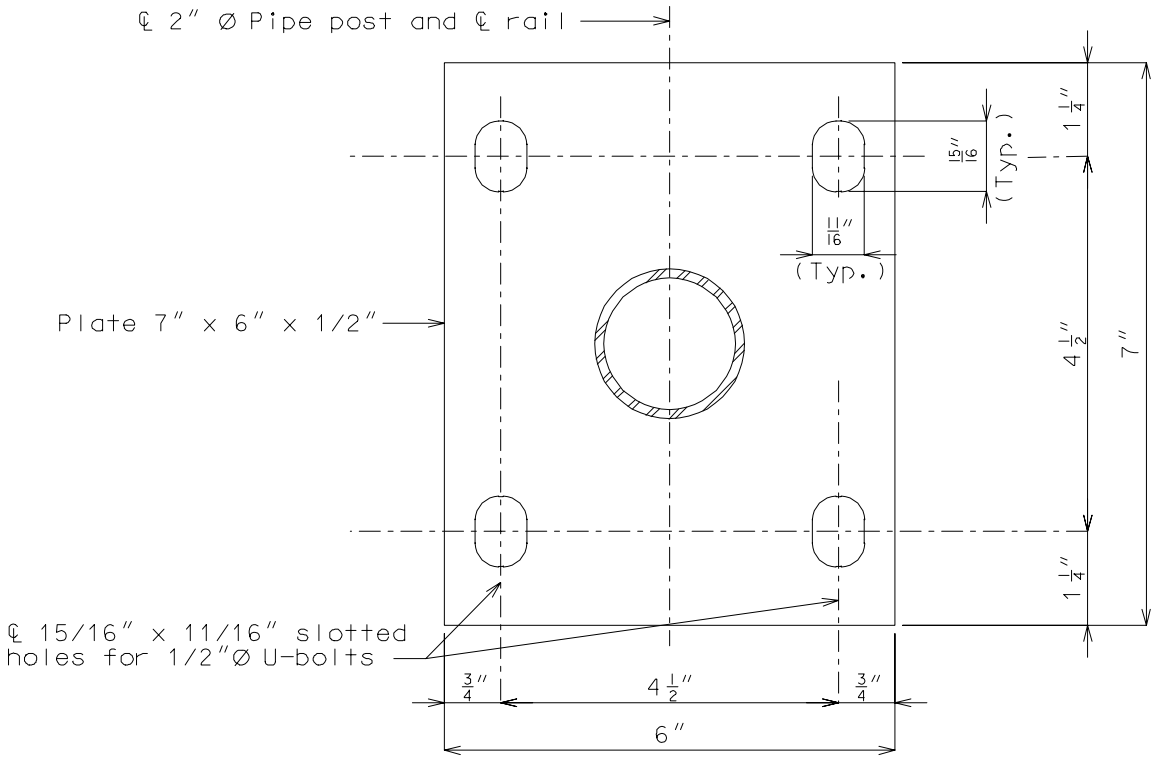

PLAN OF FLOOR PLATE

PEDESTRIAN OVERPASS (GALVANIZED STEEL) (CONT.) **Chain Link Fence**

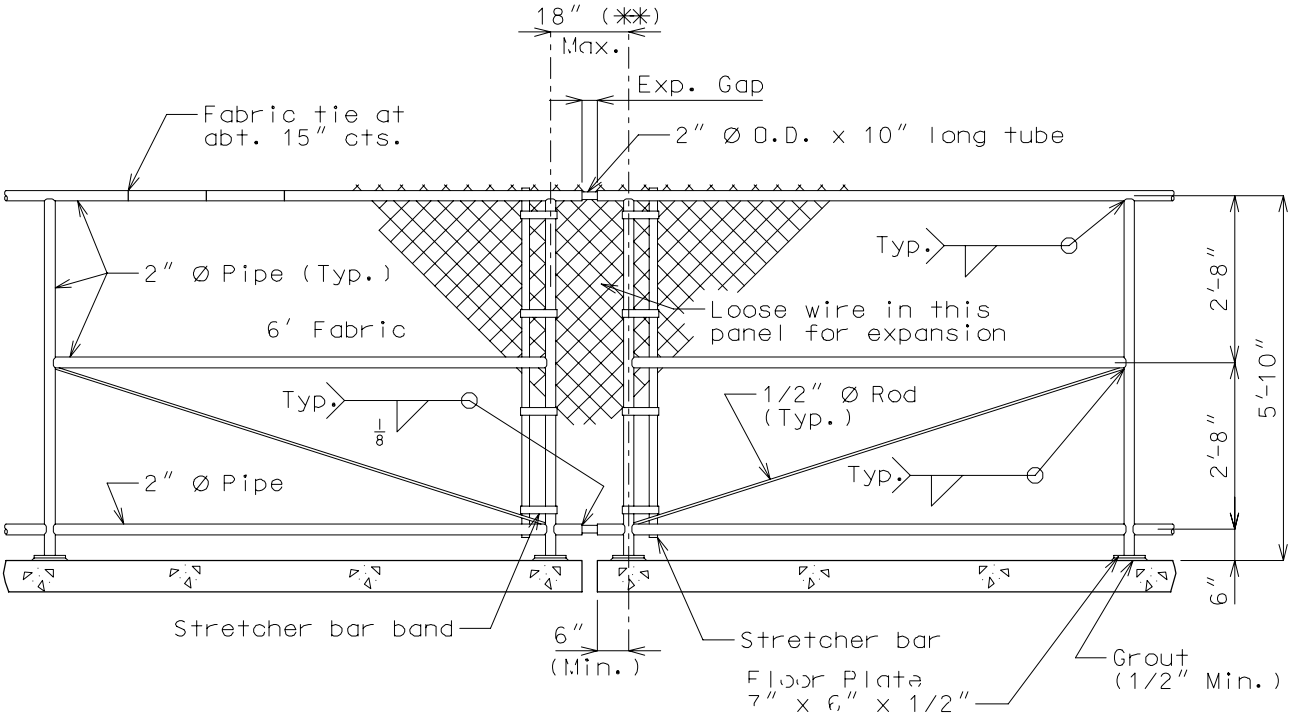

DETAILS AT EXPANSION DEVICE GAP

(✱✱) May conflict with any proposed expansion device sidewalk, consult Structural Project Manager.

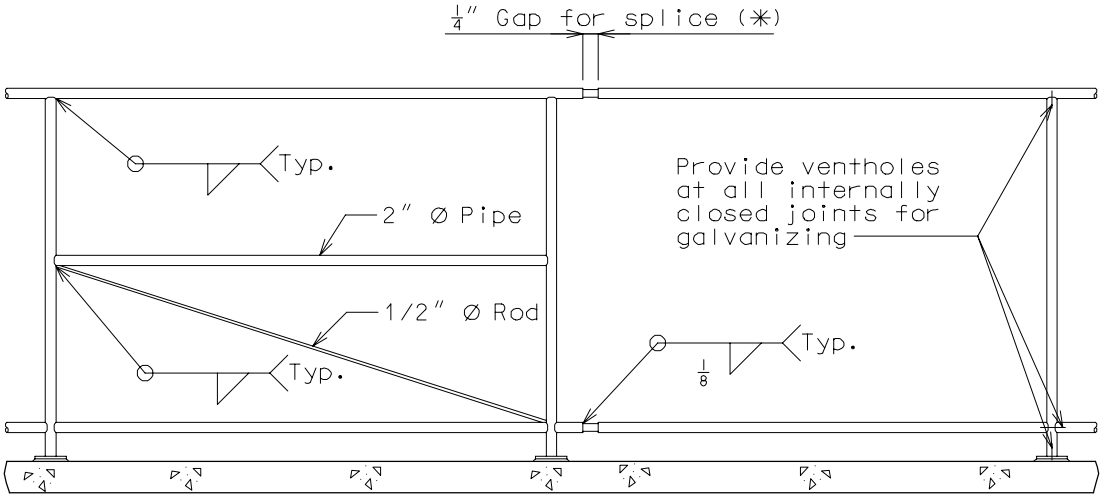

TYPICAL SECTION NEAR SPLICE GAP

Note: 8′-0″ max. post spacing for superstructure.

(✱) Locate at about 30′-0″ centers with at least one splice gap between pull posts.

(Add the following notes to the plans.)
The maximum spacing allowed for the braced panels (pull posts) is 100 ft.
Connect the lower end of 1/2″ Ø rod to the end of braced panel to which the stretcher bar is attached.

(112") CURVED TOP PEDESTRIAN FENCE (STRUCTURES)

(OPTIONAL FENCE DETAIL WHEN REQUESTED BY DISTRICT OR RAILROAD PERSONNEL)

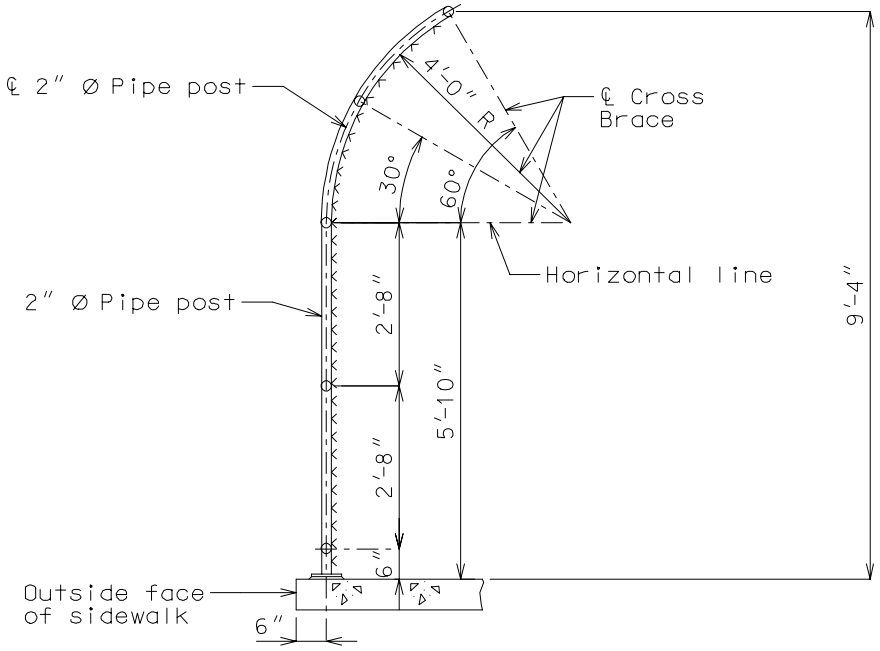

SECTION A-A

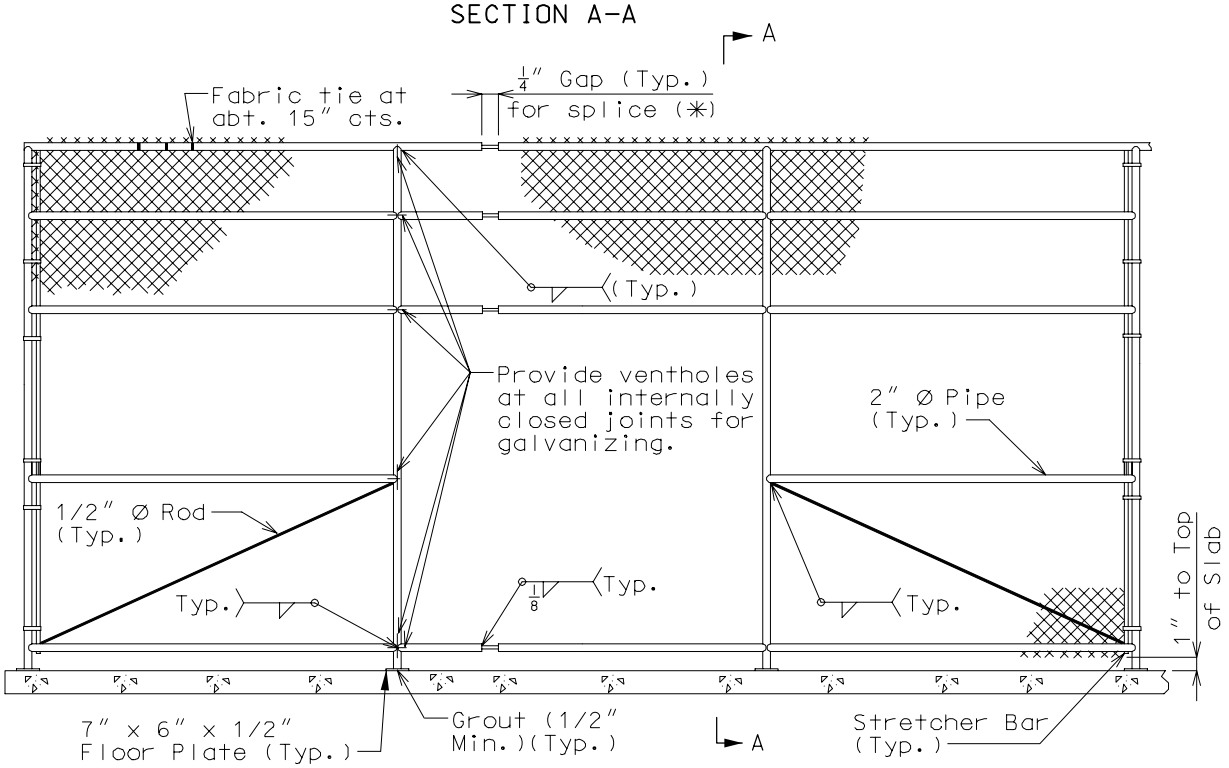

CURVED TOP PEDESTRIAN CHAIN LINK FENCE
(GALV. STEEL) ON SIDEWALK

NOTE: 8'-0" Max. post spacing for superstructure.
(✳) Locate at about 30'-0" centers with at least one splice gap between pull posts.

The maximum spacing allowed for the braced panels (pull post) is 100 feet. Connect the lower end of 1/2" Ø rod to the end of braced panel to which the stretcher bar is attached.

(112″) CURVED TOP PEDESTRIAN FENCE (STRUCTURES) (CONT.) **Chain Link Fence**

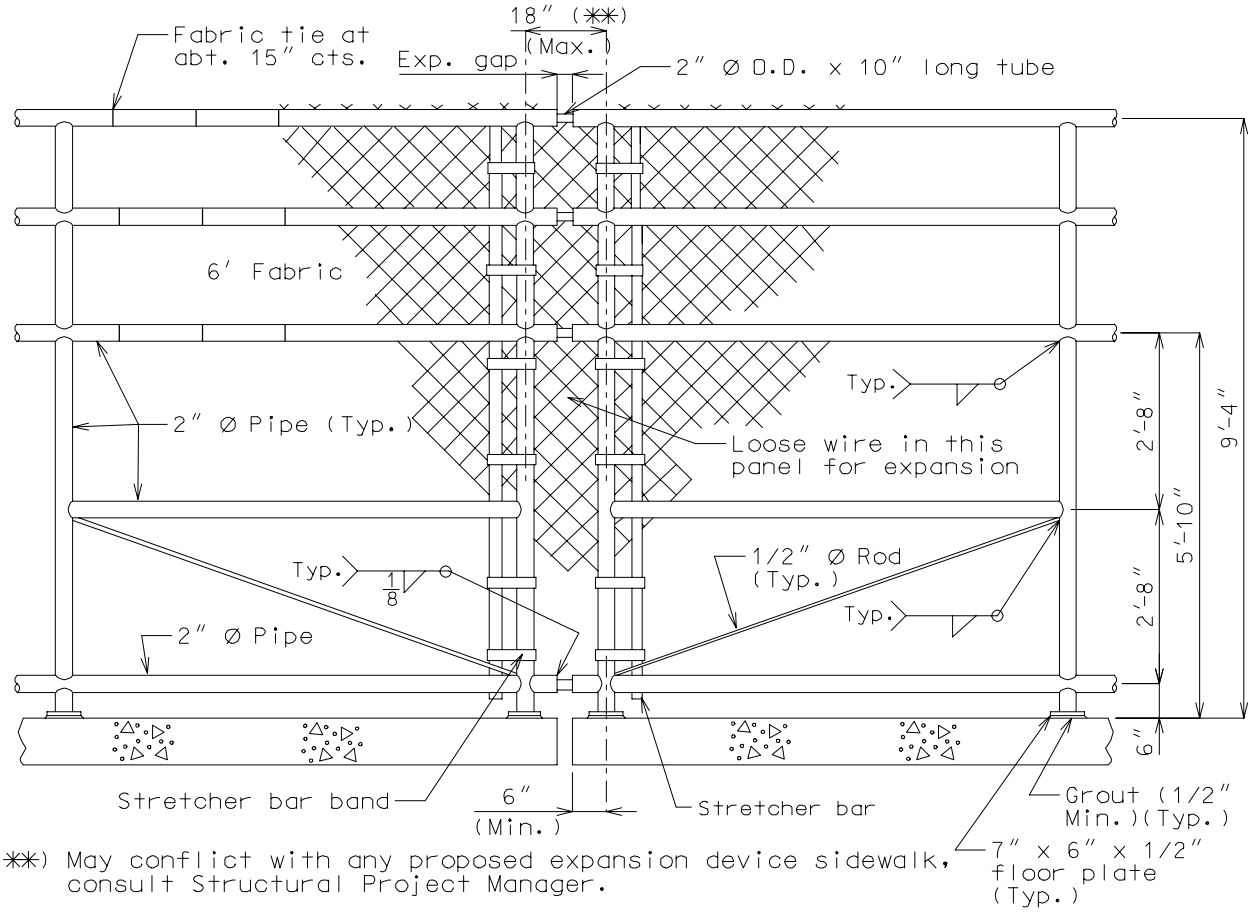

(✱✱) May conflict with any proposed expansion device sidewalk, consult Structural Project Manager.

DETAILS AT EXPANSION DEVICE GAP

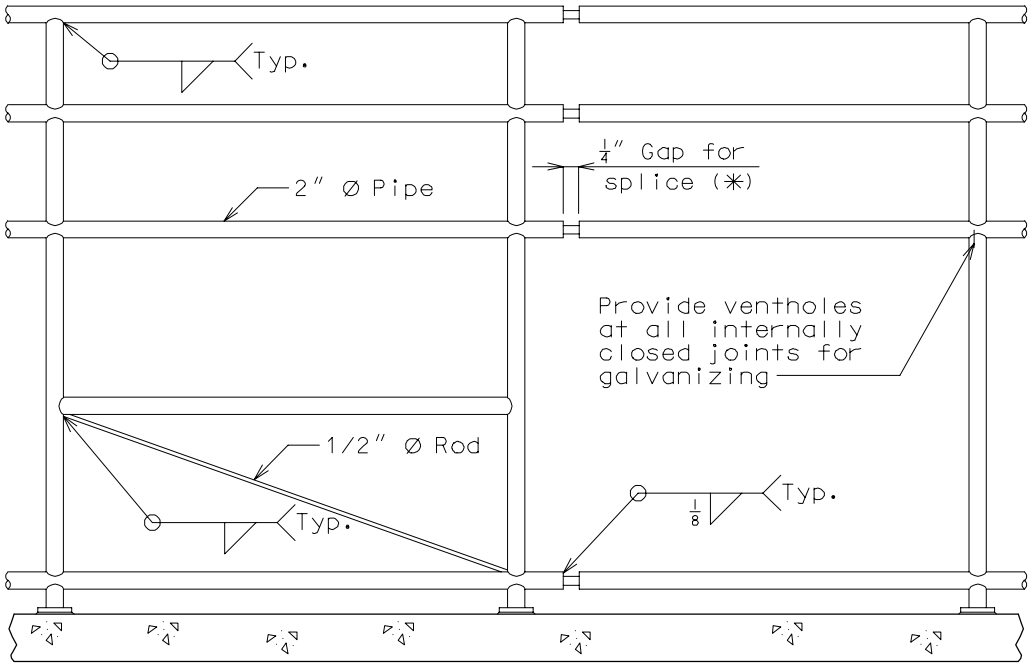

TYPICAL SECTION NEAR SPLICE GAP

Note: 8′-0″ max. post spacing for superstructure.

(✱) Locate at about 30′-0″ centers with at least one splice gap between pull posts.

DETAILS AND REINFORCEMENT OF SIDEWALK

Sidewalk

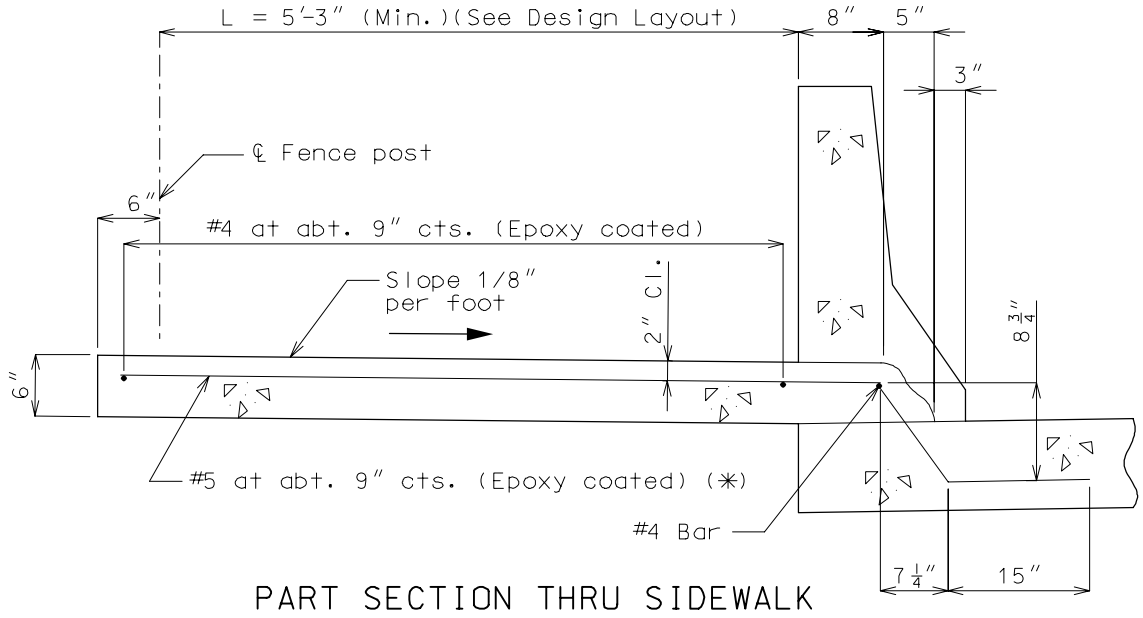

PART SECTION THRU SIDEWALK

(✳) Based on length L = 5'-3".