Missouri Department of Transportation

Bridge Division

Bridge Design Manual

Section 2.4

Revised 02/08/2004

Click Here for Index

Index of Standard Details

2.4.1 Vertical and Horizontal Clearance

2.4.2 Boring Data

2.4.3 Hydraulics

2.4.4 Substructure Layout

2.4.5 Front Sheet Misc. Details

2.4.6 General Detailing

2.4.7 Numbers and Symbols

2.4.8 Abbreviations

2.4.9 Welding Details

2.4.10 Reinforcing Steel Detailing

2.4.11 Development and Splicing of Reinforcement

2.4.12 Miscellaneous

Negative Moment Steel over Intermediate Supports

Notch Toughness

Fracture Control Plan (FCP)

Decimals of a Foot for Inches and Fractions

2.4.1 Vertical and Horizontal Clearance (**)

***Vertical Clearance* (***)**

Highway Grade Separation

The minimum vertical clearance for highway grade separations shall be the distance from the lowest point (including splice plate and bolt heads) on the bridge superstructure (including deflection from dead load and live load plus impact) to the highest point on existing lane or shoulder. The actual minimum vertical clearance for each roadway underneath the bridge shall be shown on the front sheet of the bridge plans.

Railroad Grade Separation

The minimum vertical clearance for railroad grade separations shall be the distance from the lowest point (including splice plate and bolt heads) on the bridge superstructure (including deflection from dead load and live load plus impact) to the elevation of the top of the highest rail at a point on a line 6'-0" from and parallel to the centerline of the track. If the track is superelevated, the superelevation slope shall continue to the point 6'-0" from the track centerline. An elevation shall be given on the design plans at the top of the highest rail directly on line with the point of minimum vertical clearance.

Use an asterisk and the corresponding note *(*)*, to designate the vertical clearance for a railroad grade separation. Detail vertical clearance as shown in **Figure 2.4.1-1** and place the following note on the plans near the elevation on the front sheet.

(*) Final Vertical clearance from top of rails to bottom of superstructure to be at least 23'-0".

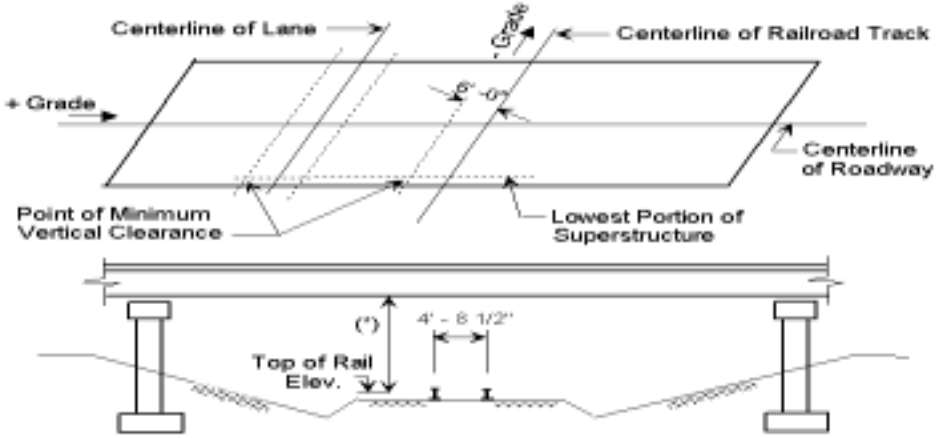

**(***) Indicates vertical clearance dimension and a note.

Figure 2.4.1-1 Vertical Clearance

(**) For traffic maintained under the structure during construction, see Office Notes Section for proper clearance notes.
(***) See the Design Layout for minimum clearance.

Minimum Vertical Clearances for Grade Separation Structures

MoDOT Design Division
Project Development Manual Table 5-04.1

Facility Under Structure	Clearance	Remarks
Interstate and Principal Arterial Routes	16'-6"	Includes shoulders
Other State Routes - Over 1700 VPD	16'-6"	Includes shoulders
(*) State Routes - Under 1700 VPD	15'-6"	Includes shoulders
(*) Other streets and roads	14'-6" (*)	Does not include shoulders
Railroads	23'-0"	Absolute minimum 23'-0"

(*) To provide continuity of travel for taller vehicles exceptions can be made both rural and urban for any routes connecting to the systems where taller vehicles are allowed but not to exceed 16'-6". A minimum vertical clearance of 15'-6" is required for bridges located in commercial zones.

Horizontal Clearance (**)

Minimum Horizontal Clearances for Grade Separation Structures

MoDOT Design Division
Project Development Manual Table 5-04.2

Facility Under Structure	Clearance
Interstate, Primary, and Urban Routes	30'-0" from edge of traffic lane
Ramp and Auxiliary Lanes	5'-3" from shoulder line
Other State Routes	5'-3" from shoulder line
Other streets and roads	5'-3" from shoulder line 2'-0" from face of barrier curb
(***) Railroads	14'-0" and 22'-0"

(***) Measured from centerline of track. The minimum clearance of 22'-0" to be provided on one side of the track(s) is for off-track maintenance. If it is not obvious on which side of the track(s) this clearance is to be provided, a decision should be obtained from the railroad's local representative. The assistance from Division of Multimodal Operations may be required in some situations.

Where a narrow median is used, provide 5'-6" minimum clearance from the edge of the traveled lanes to the face of the columns on the median side.

(**) See the Design Layout for minimum clearance.

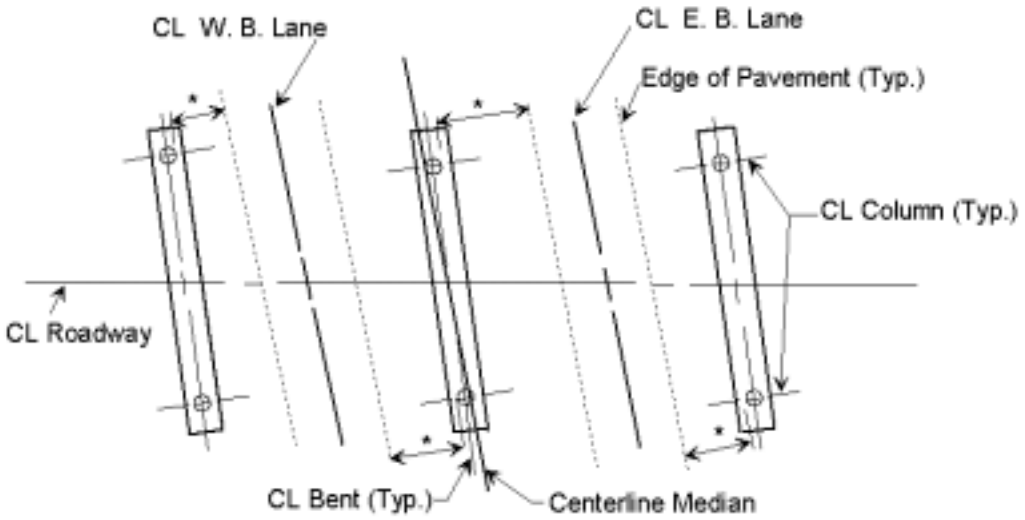

Figure 2.4.1-2 Horizontal Clearances

* Indicates horizontal clearance dimension to be shown on the front sheet of the bridge plans. (See the Design Layout for minimum clearance.)

Horizontal clearance for railroads shall be measured from the centerline of the tracks.

2.4.2 Boring Data

Front Sheet

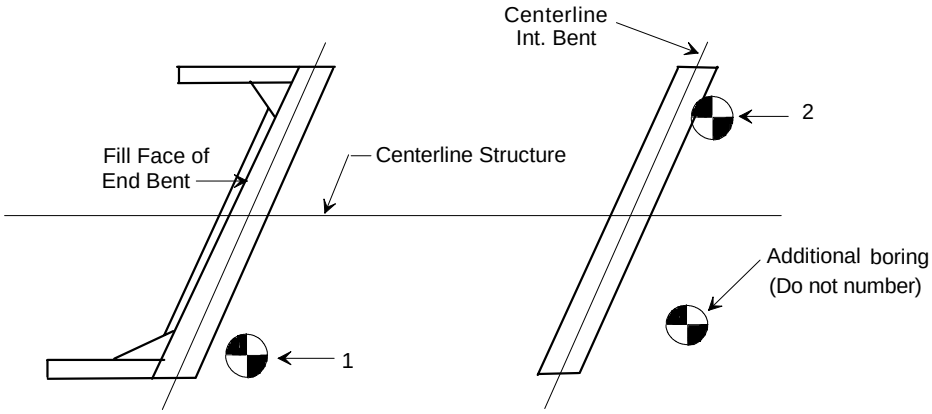

Figure 2.4.2-1 Plan View Boring Marker

All available boring data locations shall be shown with the boring symbol in the plan view on the front sheet. Detail only one boring per bent on the boring data sheet and number them accordingly. Numbered borings should try to be alternated side to side. Also give all cores.

Add boring data disclaimer note (see note E5.2 in *Office Notes* section) to the front sheet.

Boring Data Sheet

* Indicates type of Boring only when core drill is used.

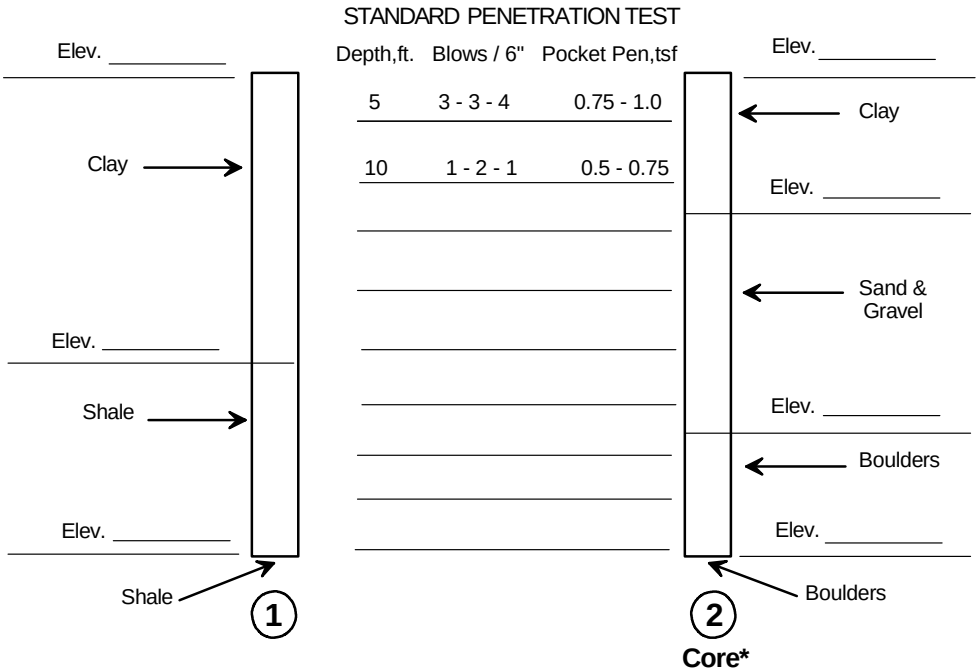

BORING DATA

Figure 2.4.2-2 Boring Log

Add boring location note *(*see note E5.4 in *Office Notes* section *)* to the boring data sheet:

For location of borings, see sheet No.__ .

2.4.3 Hydraulics

The following table for hydrologic and basic flood data is required on all bridge structures (stream crossings) and all standard box culverts. The hydrologic and basic flood data shall be given on the Design Layout.

Place the following table near the Location Sketch.

Hydrologic Data				
Drainage Area	=	(1)	sq. miles	(2)
Design Discharge	=	(1)	cu. ft./second	((1) years *)
Design H.W. Elevation	=	(1)	feet	((1) years *)
Estimated Backwater	=	(1)	feet	
Basic Flood Data (*)				
Discharge	=	(1)	cu. ft./second	((1) years)
H. W. Elevation	=	(1)	feet	
Estimated Backwater	=	(1)	feet	
Overtopping Flood Data				
Discharge	=	(3)	cu. ft./second	((3) years)

(1) If specified on the Design Layout. *

(2) Indicate the character of the drainage area as specified on the Design Layout or the Bridge Survey Report.

(3) Indicate the overtopping discharge and frequency if the frequency is less than 500 year. Indicate "Greater than 500 year" if the frequency is greater than 500 year.

(*) If the design discharge is for 100 year flood, omit Basic Flood Data Table and insert 100 years for ((1) years).

The frequency of the design discharge and the design high water elevation shall be indicated after their respective values.

The frequency is often shown on the Design Layout as a subscript to the particular item, or given in parenthesis behind the item.

Example:

Q10 - 10 year frequency for discharge.
H.W. Elev. (25 Yr. Freq.) - 25 year frequency for high water elevation.

2.4.4 Substructure Layout

Tangent Alignment

The following information should be used in conjunction with **Figure 2.4.4-1**

(1) Lengths parallel to the centerline of the roadway
(2) Column spacing along the centerline of the bent
(3) The side parallel to the centerline of the bents in skew diagram
(4) The side parallel to the centerline of the roadway in skew diagram
(5) The acute angle between the centerline of bents and the centerline of the roadway in skew diagram
(6) The angle between the centerline of the bents and a line normal to the centerline of the roadway in skew diagram

The span lengths for steel and prestressed structures are given in the Design Layout are horizontal dimensions. For prestressed girders, the actual girder length should be adjusted accordingly for grade.

Horizontally Curved Alignment

The following sketches show the form and content to be used in detailing the substructure layout for some of the most common horizontal curve situations. When situations arise where modification of these sketches becomes necessary, the sketches should be used as a guide with regards to the form and content of the modified layout.

Attention should be given to the fact that in all cases illustrated here, the centerline of the roadway passes through the geometric center of the intermediate bents. On occasion, particularly in the case of continuous I-Beam spans, or where the slab is not symmetrical about the centerline of the roadway, this will not happen. In these and any other cases which may cause a similar situation, dimension "d", from the intersection of the centerline of the roadway with the longitudinal centerline of the bent, to the geometric center of the bent, must be shown (see **Detail "A"** in **Figure 2.4.4-3**). All bents will be parallel unless otherwise noted on the Design Layout.

The following key describes the dimensions marked on **Figure 2.4.4-2, Figure 2.4.4-3, Figure 2.4.4-4** and **Figure 2.4.4-5** in this Section.

1 Dimension along tangent
2 Offset from the tangent
3 Angle between chords of adjacent spans
4 Chord length
5 Dimension along the centerline of the median or roadway
6 Angle between the centerline of the bent and the chord
7 Angle between the fill face and the chord
8 Angle between the fill face and a radial line
9 Angle between the tangent and a chord
10 Skew angle
11 Dimension from the centerline of the median to the centerline of the lane in the direction of the centerline intermediate bent
12 Dimension from the centerline of the median to the centerline of the lane at the fill face

Short Bridges on Long Chords

Bridge Placed Parallel to the Long Chord

When noted on the Design Layout, short bridges on small horizontal curve alignments may be detailed on a line parallel to the long chord. The intent is to simplify the bridge geometric by placing the centerline of steel or P/S beam assembly on or parallel to the long chord to the centerline of roadway curve between fill faces of end bents. In order to avoid excessive slab overhangs, the line parallel to the long chord is usually placed at one-half the mid ordinate between curve and long chord. For this situation, the outside faces of the slab, barrier, rails, and wings shall be detailed concentrically with the roadway curvature, and curb ordinates shall be furnished on the plans.

It is to be noted that even for symmetrical width bridges, the location of bearings will not be symmetrical about the centerline of bents. Also, the intermediate bent caps shall be built to sufficient length on each end to accommodate the bearing offsets toward either end. See **Figure 2.4.4-6**.

Bridges Placed on the Long Chord

For wide roadways and very small degrees of curvature for which the mid ordinates are 3" or less, the Design Layout may occasionally direct that the entire bridge be detailed as a tangent bridge along the long chord. For this situation, no parts of the bridge are to be curved. Details for the plan view on the front sheet of the bridge plans will be similar to examples given on the following sheets except that the centerline of bridge roadway will be on the long chord.

Coordinating Superstructure - Curve Offsets

Plans for horizontally curved bridges shall contain the slab offset detail shown in **Figure 2.4.4-7**.

Slab offsets from chords, between the centerline of bents, shall be detailed at every 5'-0" along the chord. On circular curves, these offsets shall be spaced from the center of the chord to insure that the largest offset is recorded.

Substructure on Tangent Alignment

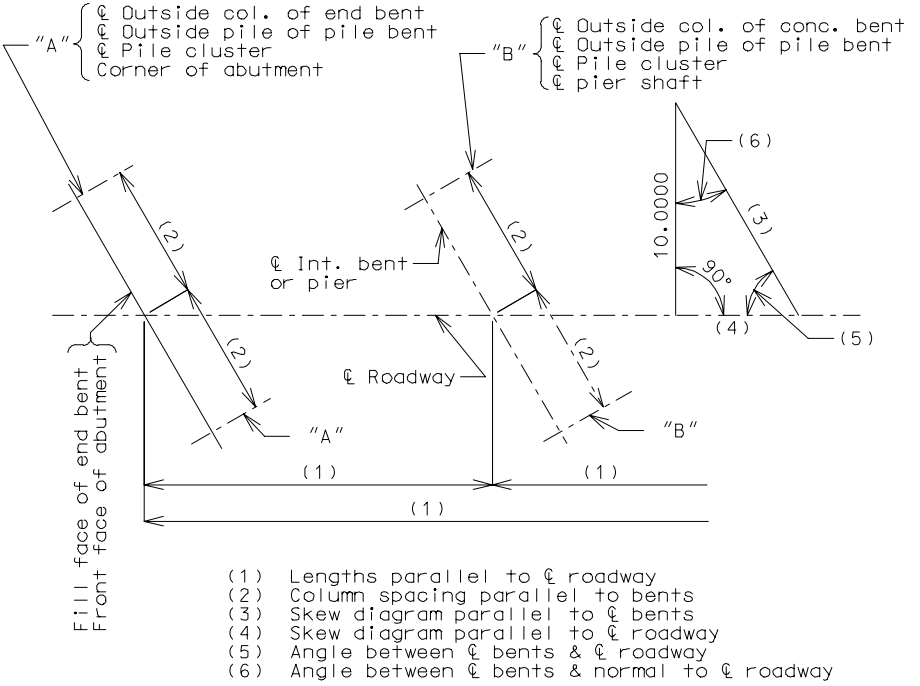

Figure 2.4.4-1 Coordinating Substructure on Tangent Alignment

NOTE:
The span lengths for steel and prestressed structures as given in the Design Layout are horizontal dimensions. The actual girder length should be adjusted accordingly for grade.

Horizontal Curved Alignment

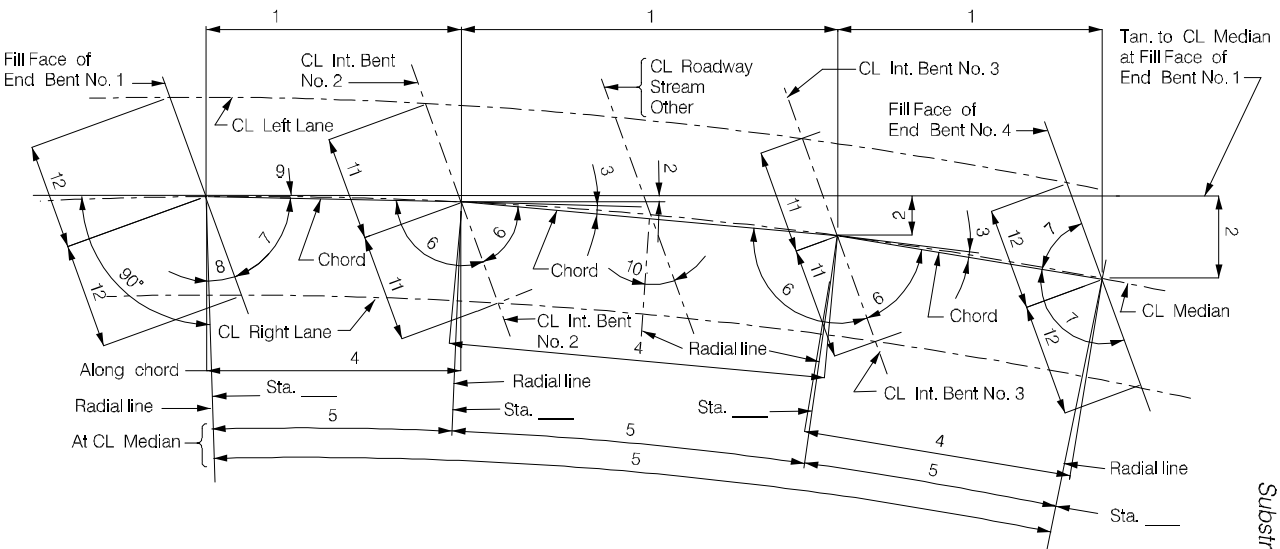

Figure 2.4.4–2 Dual Lane Structures Tied at Fill Face of End Bent

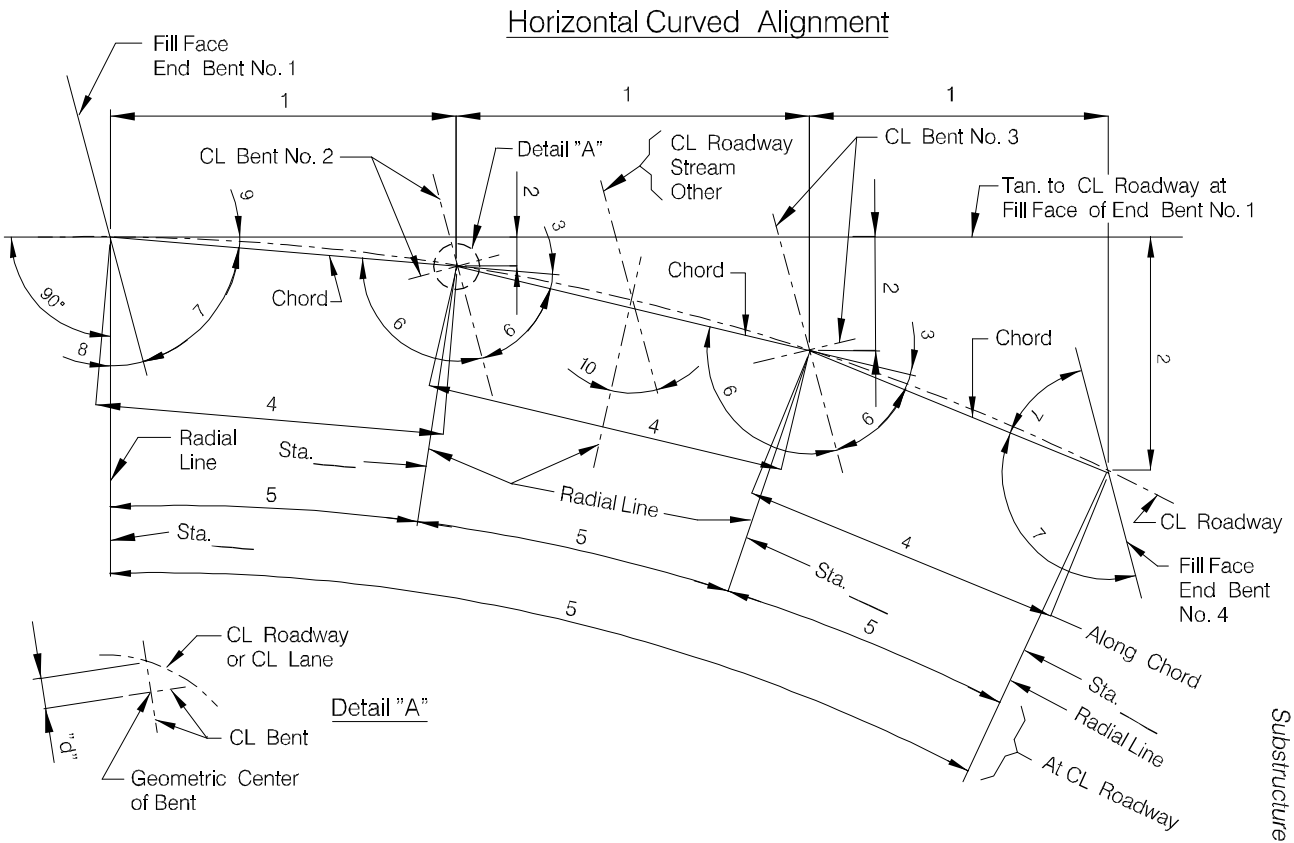

Figure 2.4.4–3 Single Lane Structure Tied at Fill Face of End Bent

Horizontal Curved Alignment

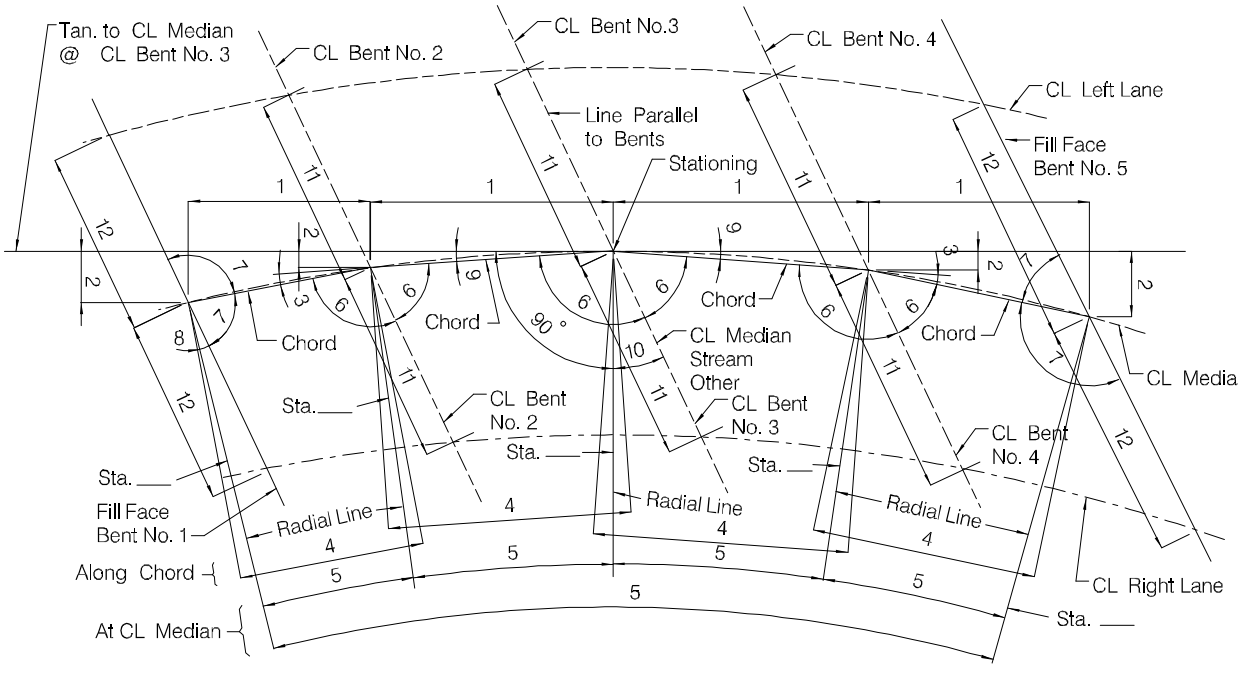

Figure 2.4.4–4 Dual Lane Structure Tied at Intersection

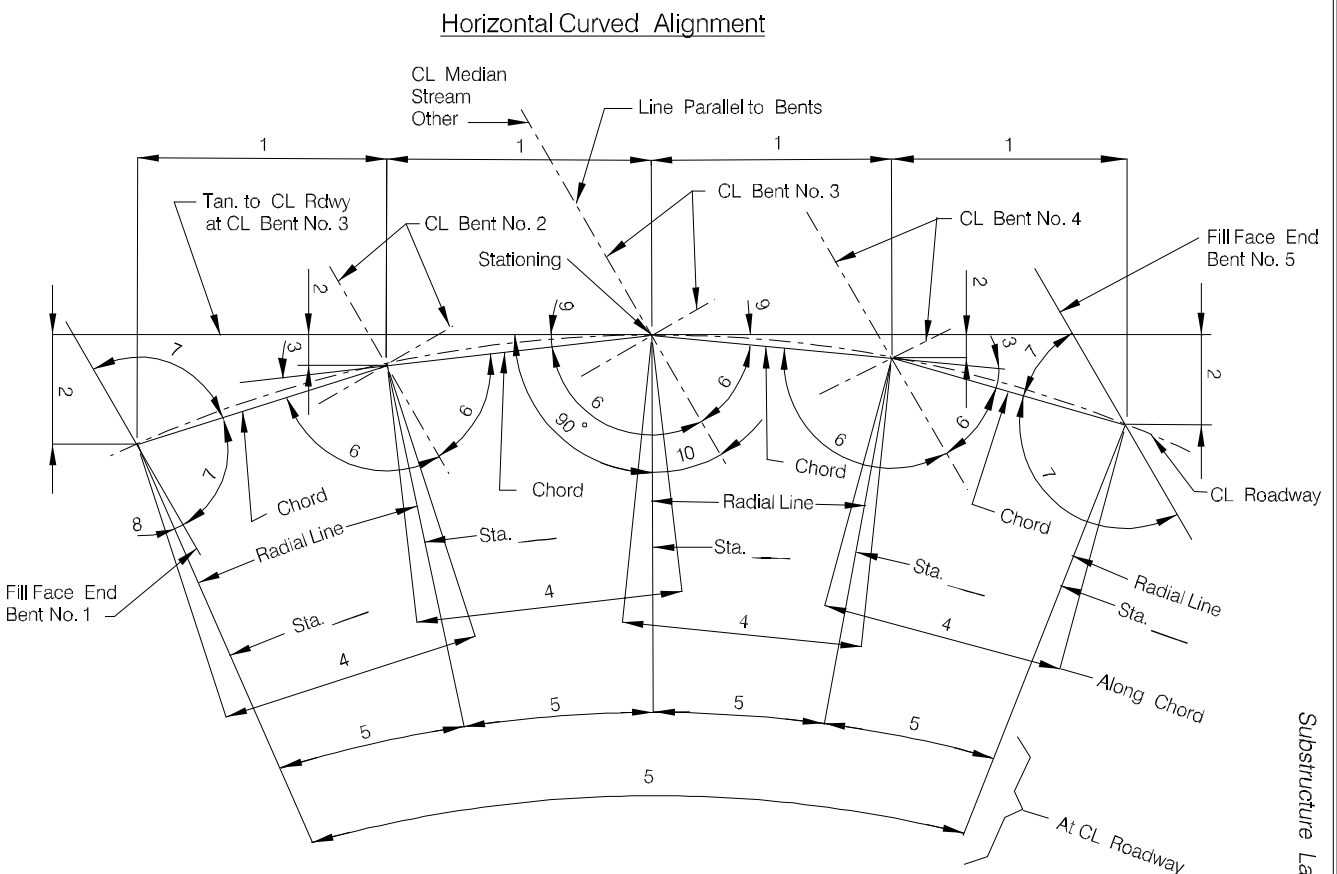

Figure 2.4.4–5 Single Lane Structure Tied at Intersection

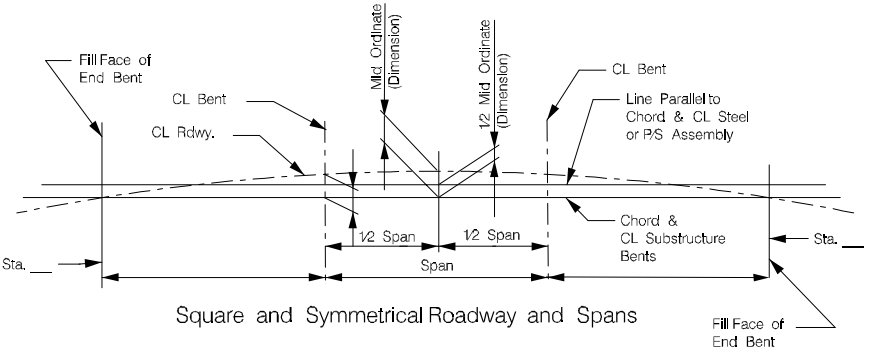

Square and Symmetrical Roadway and Spans

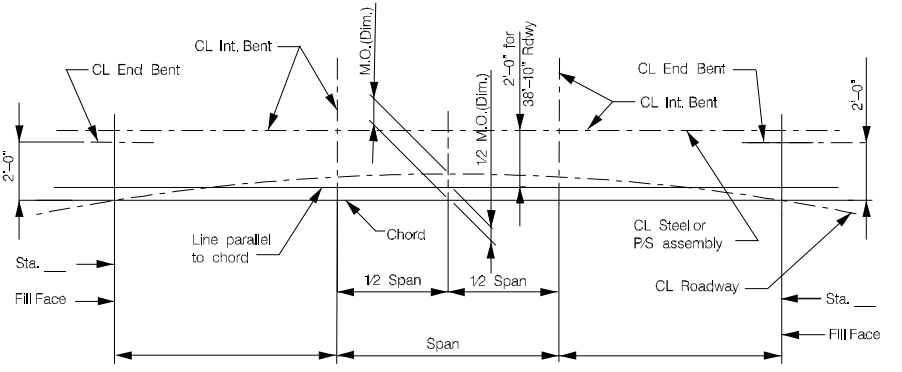

Square and Unsymmetrical Roadway, Symmetrical Spans

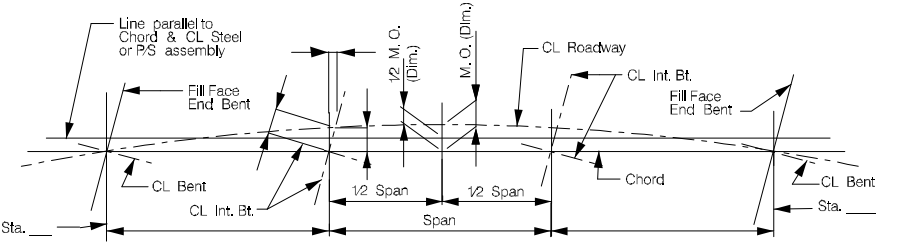

Skewed and Symmetrical Roadway and Spans

Figure 2.4.4–6 Short Bridges on Long Chords

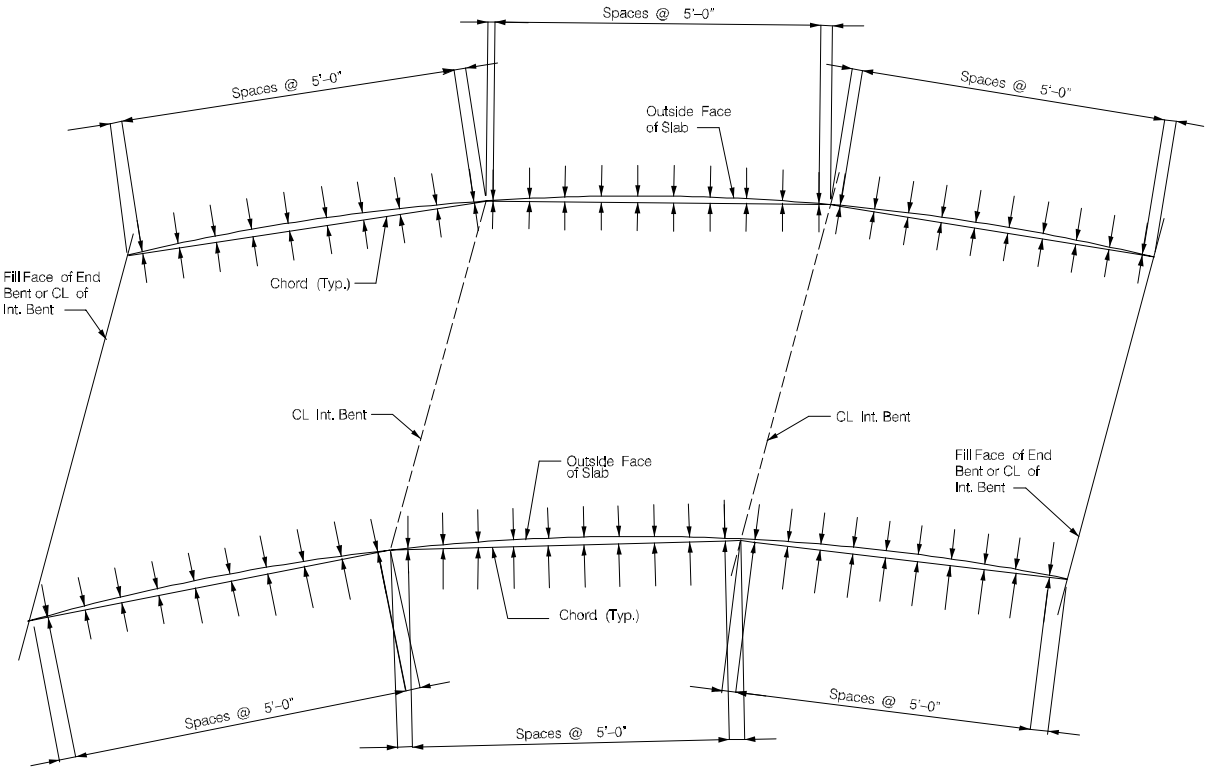

Plan of Slab Showing Curve Ordinates

Figure 2.4.4–7 Slab Offsets for Curved Bridges

2.4.5 Front Sheet Misc. Details

Bench Mark

A bench mark in the vicinity of the bridge shall be provided on the front sheet and shall be located just above the title block as shown below in the following figure.

B.M. Elev. 431.56 " □ " Chiseled on Abut. , N.W. Corner of Bridge A1234 , Sta. 707+351.25

BRIDGE OVER HOMMES CREEK

Location Sketch

A location sketch shall be provided on the front sheet of all bridge structures including box culverts and retaining walls. The location sketch may be eliminated on grade separation structures except where payment is made for removal of an existing structure or a congested area is involved such as a series of ramps, extended slope protection etc.. When the location sketch is eliminated, place the north arrow near the plan view on the front sheet.

The location sketch for stream crossings should show the outline of the stream channel at the bridge site. The name of the stream should be given and the direction of flow indicated by an arrow on which is written the word "Flow". Any required channel change should be shown and labeled "Proposed Channel Change" and reference made to the road plans.

The centerline of the roadway should be shown and noted. The beginning station and outline of the new bridge should be shown and the new bridge labeled "Proposed Structure". The existing bridge, if any, should be shown and labeled "Existing Structure", and if it is a state bridge that is to be removed the bridge number shall be indicated in the location sketch. Place the north arrow near the Location Sketch.

Where structures are located on or within 150 feet of horizontal curves show complete curve data in the Location Sketch.

Standard Plan Sheets

Missouri Standard Plans (English Version) drawings applicable to a structure shall be made reference to on the front sheet of the bridge plans. The standard plan number (s) shall be located above the bridge number in the title block as shown the following figure.

STA.	**STD. 611.60**
RTE.	**STD. 706.35**
COUNTY	**A0000**

Information Block

The figure below shows the SEC. / SUR. (Section or Survey number), TWP. (Township) and RGE. (Range) that is included in the information block in the upper right corner of the front sheet.

STATE	PROJ. NO.	SHEET NO.
MO.		
SEC./SUR.	TWP.	RGE.

Construction Change Details

When the plans require changing after the bridge has been let the existing information must be kept on the plans. The changes shall be shown with details similar to the following figure.

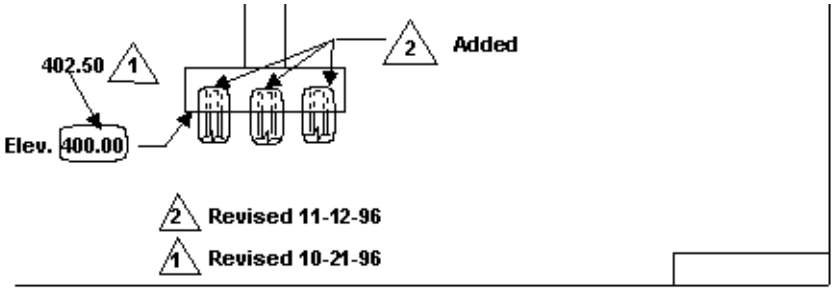

Curve Data

All curve data of roadways that are going over or under the bridge shall be provided on the front sheet.

Filled Joint Detail

When joint filler is indicated on the plans, include Section number of Missouri Standard Specifications indicated below.

- Superstructure 1057.2.4
- Superstructure . . . . . .
- Pedestrian Structures . . . . . .
- Retaining Walls . . . . . .

  } Sec. 1057 preformed spnge rubber Expan. and Partition Joint. filler

- Culverts . . . .
- Slope Protection . . . .
- P/S Panels . . . .

  } Sec. 1057 Preformed Fiber Expan. Jt. Material

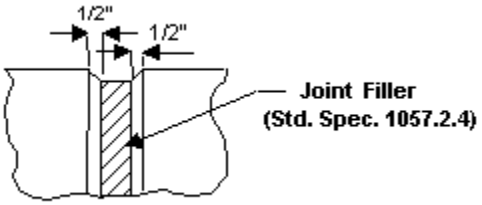

Filled Joint Detail

When a rock blanket is specified on the Profile Sheet of layout file it should be shown in the General Elevation of the front sheet. Surface Grout or Type 3 Geotextile Material shall also be noted if they are needed. The following figure shows common rock blanket details.

✳ 12″ between top of spill slope and lowest beam depth for Girder Bridges and 24″ for Concrete Slab Bridges.

✳✳ Elev. at top of Rock Blanket for side slopes shall be the highest of the following:
12″ above High Water Elevation (For 500 Yr. Freq.) or
24″ above High Water Elevation (For 100 yr. Freq.)

Upper Elev. of Rock Blanket on spill slope need not be higher than that for the side slope.

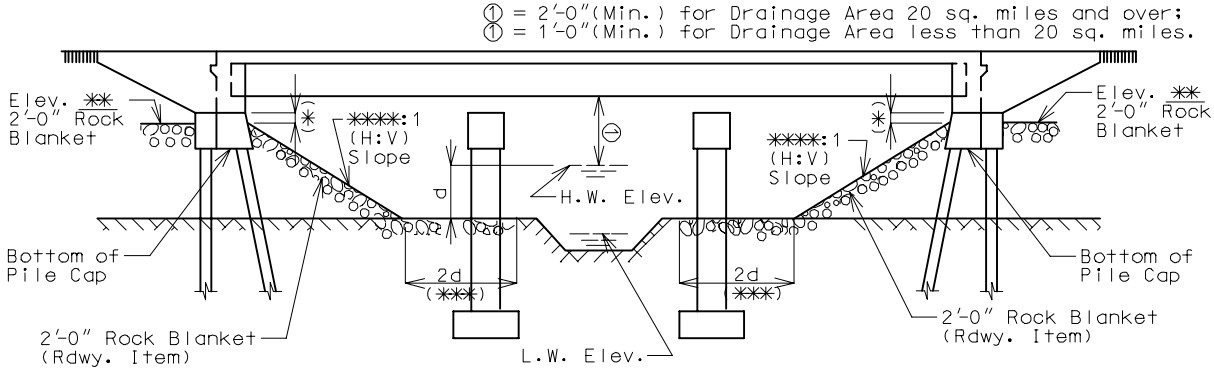

GENERAL ELEVATION

Note: When Surface Grout or Type 3 Geotextile Material is specified on profile sheet it should be noted in the GENERAL ELEVATION.
Outlets may be used over Surface Grout or Type 3 Geotextile Material.
See Bridge Plans for type of curb to be used.

✳✳✳ A Rock Blanket Apron should extend from the toe of the Spill Slope into the bridge waterway a distance equal to twice the Flow Depth in the overbank area near the embankment, but need not exceed 25 feet.

✳✳✳✳ See Design Layout for maximum slope of spill fill (Maximum allowable spill fill slope is determined by Materials Division and specified in the Soils Survey for each project).

2.4.6 General Detailing

Bridge MicroStation Manual

Levels

All Cadd drawings shall be drawn in MicroStation and shall have the following levels, colors and line weights.

1 Concrete object lines (color 1 gray, weight 5)

2 Reinforcing steel (color 4 green, weight 4)

3 Structural steel object lines (color 4 green, weight 4)

4 Hidden lines (dashed, color 4 green, weight 4)

5 Centerlines (centerline, color 5 yellow, weight 2)

6 Dimensions (color 5 yellow, weight 2)

7 Leadered notes (color 5 yellow, weight 2)

8 Small text (color 5 yellow, weight 2)

9 Medium text (color 1 gray, weight 5)

10 Large text (color 2 red, weight 7)

11 Existing structure (lt. dash, color 5 yellow, weight 2)

12 Cells (variable colors and weights)

13 Area fill (color 7 magenta, weight 1)

14 Section lines (color 2 red, weight 7)

15 Quantity boxes and tables (variable colors and weights)

16 Ground line (color 1 gray, weight 5)

17 Annotations (No color or weight required)

18 Break and match lines (color 5 yellow, weight 2)

19 Misc. object lines (color 5 yellow, weight 2)

20 Points (color 7 magenta, weight 8)

Conventions

Reinforcing steel, except when sectioned, is shown by a single line. Centerlines are represented by a single dot between dashes. Hidden surfaces are represented by short dashed lines. Water surfaces will be shown by broken or dashed lines as shown below.
The hatching of ground lines shall be shown as follows.

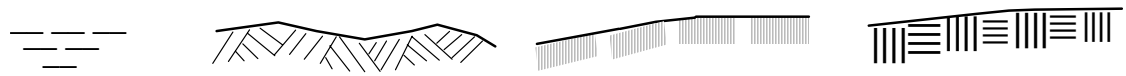

Miscellaneous Lines used to indicate the magnitude of angle between two straight lines shall be an arc drawn with the center at point of intersection of the two lines. Arrows and dimension lines shall touch the items or extension lines they point to. Dimension lines shall be normal to extension lines whenever possible.

Dimensions and Leadered Notes

Dimensions and leadered notes shall be placed as close to the detail as possible and shall cross a minimum number of lines and details.

A bracket is normally not required for a multi-line note. The leader line should originate from the beginning or end of the note.

When designating a structural steel member, the leg the arrow points to should be the first value mentioned in the note.

When designating a number of parallel lines (such as reinforcing bars), a dimension line shall be used between the outside lines of the group. If the desired text will not fit clearly on the dimension line, the text may be placed away from the dimension line, and attached to the dimension line's center by an arrow. Arrowheads placed inside the extension lines should have a minimum clearance of 3/8" between the arrows.

Sections, Breaks and Curved Surfaces

Locating Sections In general, the location of all sections shall be shown by use of heavy lines placed just outside the limits of the detail or portion of detail sectioned. Where, for the sake of clarity, it is necessary to show the direction of the view taken, arrows may be used at the ends of these lines and at right angles thereto. A reference letter shall be placed at these lines or arrows and the same letters used in the titles under sectional views. Views are normally shown looking in the direction of stationing, with the exception of End Bent No.1 which is reversed.

Hatching Sectional views cutting through concrete shall be hatched with the conventional dot and triangle or oval hatching. Care shall be taken to avoid dense or crowded hatching, particularly for sections showing reinforcing steel.

Sectional views through reinforcing steel shall be shown solid. Sectional views through structural steel shall be shown as parallel sloping line hatching. In special cases, for the sake of clarity, the sections through structural steel may be left open or shown solid.
Except for special cases, all miscellaneous materials such as joint filler, castings, lead plate, etc. shall have sectional views shown hatched with

light parallel lines, evenly spaced and sloped 45 degrees to the horizontal.

Breaks may be used in views for sake of clarity. All breaks should be drawn without excessive waving or zig-zag movements. A loop may be used in showing breaks in round objects such as columns.

Sloped or curved surfaces shall not be shaded except for special cases.

Lettering

All lettering shall be upper and lower case except titles, which shall be all capital letters in bold print.

Bridge MicroStation Manual

Text Height Body text shall be 0.0104 foot (1/8 inch) in height, titles shall be 0.0156 foot (3/16 inch) in height and the county name shall be 0.0208 foot (1/4 inch) in height.

Dimensions

Dimensions

All details should be in English units only. No dual dimensioning will be used. Print unit name in lower case, even those derived from a proper name except for Fahrenheit (F.).

Use only feet and inches for length measurements. Dimensions under 2'-0" shall be detailed as inches.

In general, detail dimensions shall be given to the nearest 1/8". Where close work is required, dimensions for metals may be given to the nearest 1/16", 1/32" or 1/64". Deflections and haunches shall be reported to the nearest 1/16". Substructure layout for horizontally curved bridges shall be dimensioned to the nearest 1/16".

Nominal span lengths at the top of the front sheet shall be reported in feet and inches only.

The term or abbreviation for "about" shall not be used in the dimensioning of structural steel.

Stationing

Stations are one hundred feet. All stationing should be carried to the nearest hundredth foot as follows: 251+50.14.

Elevations

All elevations will be reported in feet. All elevations will be carried to the nearest hundredth foot as follows: 1234.98.

2.4.7 Numbers and Symbols

Rules for Writing Numbers & Slopes

Use feet and inches for length measurements. Make inch and foot marks of medium lengths (about 1/16") and place them to the upper right of numbers to which they refer.

Use fractions, not decimals for inches (3/4", not 0.75"; 2-1/2", not 2.5").

Common fractions shall be written with a vinculum separating the numerator from the denominator. These bars shall be placed horizontally except for rare cases where lack of space makes this impractical or when placed within a note. Common fractions shall always be given on the basis of architects' scale.

Some examples of fractions used in a note are:
- two 3/4" dia. coil tie rods
- 2-1/2" x 1-1/4" plate
- 2'-0 3/8" long bar

The decimal marker shall be a period.

Slope is expressed in non-dimensional ratios. The horizontal component will be shown first followed by the vertical component (H:V). The horizontal component is unitary for slopes greater than 45° and the vertical component is unitary for slopes less than 45°. The components in a slope ratio must be of identical units.

Rules for Writing Symbols

Only approved symbols shall be used for noting reinforcing bars, structural steel shapes, bolts, welding, dimensions, angles, etc. Symbols shall not be omitted where they apply except in authorized designation of structural steel shapes. Welding symbols shall be in accordance with American Welding Society (AWS).

2.4.8 Abbreviations

In general, abbreviations shall not be used in notes or drawings except for short notes located where space is very limited. Care shall be taken to avoid the extravagant use of abbreviations for any purpose. However, approved abbreviations may be conservatively used for noting and labeling the various items and details of the plans and of the tabulated data. Titles may be abbreviated where required by lack of space.

The following is a partial list of approved abbreviations and should be observed where applicable.

American Association of State Highway and Transportation Officials	AASHTO
About	Abt.
Abutment	Abut.
And	&
Angle	Ang.
Approach	Appr.
Approximately	Approx.
Approved	Appv.
Alternate, Alternately	Alt.
Area	Ar.
Asphalt	Asph.
American Society for Testing and Materials	ASTM
Avenue	Ave.
Average	Avg.
Baluster	Bal.
Backfill	Bkfl.
Beam	Bm.
Bench Mark	B.M.
Bearing	Brg.
Bent	Bt.
Bevel	Bev.
Bituminous	Bit.
Bottom	Bott.
Bracket	Brkt.
Bridge	Br.
Building	Bldg.
Cantilever	Cant.
Cast Iron	C.I.
Centers	Cts. or Ctrs.
Center to Center	Ctr. to Ctr.
Channel (Stream)	Chan.
Clear or Clearing	Clr.

Abbreviations

Collision (Wall)	Coll.
Column	Col.
Concrete	Conc.
Concrete Reinforcing Steel Institute	CRSI
Connection	Conn.
Construction	Const.
Continuous	Cont.
Corrugated	Corr.
Counterfort	Ctft.
Countersunk	Ctsk.
County	Co.
Creek	Cr.
Creosoted	Creo.
Cubic (Yd., Ft., In.)	Cu.
Cubic feet per second	cfs.
Culvert	Culv.
Dead Load	D.L.
Deck Girder	D.G.
Department	Dept.
Design	Des.
Detail	Det.
Diagram	Diag.
Diameter	Dia.
Ditto (Steel Details)	Do.
Division	Div.
Double	Dbl.
Drawing	Dwg.
East	E.
Elevation	Elev. or El.
Engineer	Engr.
Estimate	Est.
Excavation	Exc.
Existing	Exist.
Expansion	Exp.
Fabricated	Fab.
Far Side (Steel Details)	F.S.
Federal	Fed.
Feet or Foot	Ft.
Fixed	Fix.
Flange	Flg.
Floor	Fl.
Galvanize	Galv.
Gauge	Ga.
Grade	Gr.

Abbreviations

Head ---------- Hd.
Hexagonal ---------- Hex.
High Water ---------- H.W.
Highway ---------- Hwy.
Horizontal ----------Hor.

Impact ---------- I.
Inch or Inches ---------- In.
Include ---------- Incl.

Joint ---------- Jt.

Lateral (Steel Details) ---------- Lat.
Left ---------- Lt.
Length ---------- Lgth.
Linear, Lineal (Ft., In.) ---------- Lin.
Live Load ---------- L.L.
Longitudinal ---------- Long.
Low Water ---------- L.W.

Maximum ---------- Max.
Miles ---------- Mi.
Minimum ---------- Min.
Miscellaneous ---------- Misc.
Missouri Department of Transportation ---------- MoDOT

Near Side (Steel Details) ---------- N.S.
North ---------- N.
Number ---------- No.

Octagonal ---------- Oct.
Ordinate ---------- Ord.
Overflow ---------- O.F.
Overhead ----------O.H.

Paragraph ---------- Par.
Perpendicular ---------- Perp.
Plate ---------- Pl.
Point ---------- Pt.
Pound ---------- Lb
Project ---------- Proj.

Radius ---------- Rad. (or R.)
Railroad ---------- R.R.
Railway ---------- Rlwy.
Reinforcing ---------- Reinf.
Retaining (Wall) ---------- Ret.
Right ---------- Rt.
River ---------- R.
Roadway ---------- Rdwy.

Route	Rte.
Rubber Compound	Rub. Comp.
Section	Sec.
Sheet	Sht.
Shoulder	Sh.
South	S.
Space	Spa.
Specification	Spec.
Square	Sq.
Standard	Std.
Station	Sta.
Street	St.
Stringer	Str.
Structural	Struc.
Substructure	Substr.
Superelevation	Superelev. or S.E.
Superstructure	Superstr.
Symmetrical	Symm.
Tangent	Tan.
Thread	Thd.
Transverse	Trans.
Truss	Tr.
Typical	Typ.
Variable	Var.
Vertical	Vert.
West	W.
Widen or Widening	Wid.
Wrought Iron	W.I.
Yard	Yd.

2.4.9 Welding Details

ANSI/AASHTO/AWS D1.5

All welding shall be detailed in accordance with ANSI / AASHTO / AWS D1.5, Bridge Welding Code. See **Figure 2.4.9-2** to **Figure 2.4.9-10** for standard welding symbols.

AASHTO 10.32.2

For ASTM A709, Grade 36 steel (Service Load Design F_u = 58,000 psi) the allowable shear stress in fillet welds (F_V) is:

$$F_V = 0.27\ F_u$$

where

F_V = allowable basic shear stress;

F_u = tensile strength of the electrode classification but not greater than the tensile strength of the connected part.

Allowable Shear Loads for Fillet Welds *

Size of Fillet Weld (Inch)	**Allowable Shear Loads per Length** (Pound per lineal inch)
1/8”	1,380
3/16”	2,075
1/4"	2,770
5/16”	3,460
3/8”	4,150
1/2"	5,535
5/8”	6,920
3/4"	8,300
7/8”	9,690
1”	11,070

* Allowable Shear Load = (0.27)(58000 psi)(0.707xSize of Weld)(L)
where: L = Effective Length, in inch
(0.707xSize of Weld) = Effective Throat, in inch
(0.707xSize of Weld)(L) = Effective weld area in sq. inch

Minimum Sizes of Fillet Welds

MO Standard Specifications Section 1080.3.3.5.3

Material Thickness of Thicker Part Joined	Minimum Size of Fillet Weld
To 3/4" inclusive	1/4" **
Over 3/4" to 2-1/2"	5/16" **
Over 2-1/2"	1/2"

* Except that the weld size need not exceed the thickness of the thinner part joined.
** Single pass fillet welds shall be used.

Minimum Length of Fillet Weld

ANSI/AASHTO/AWS D1.5 Section 2.3.2.3

The minimum effective length of a fillet weld shall be four times its size and in no case less than 1-1/2 inches.

Maximum Sizes of Fillet Welds

ANSI/AASHTO/AWS D1.5 Section 2.7.1.2

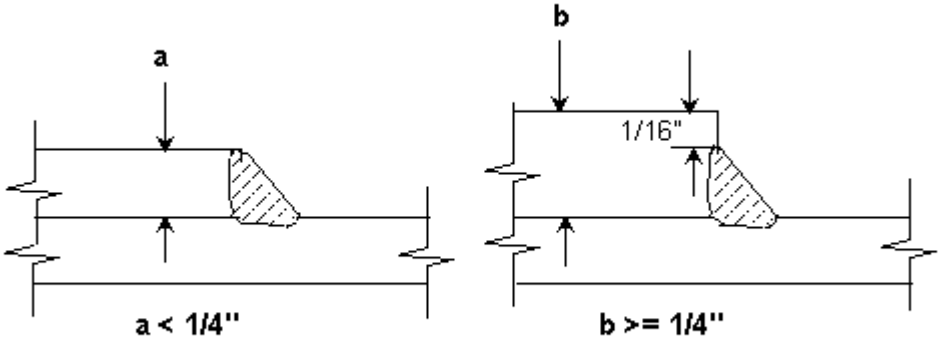

Figure 2.4.9-1 Maximum Fillet Weld Sizes

Basic Welding Symbols and Their Location Significance

Location Significance	Fillet	Plug or Slot	Spot or Projection	Stud	Seam	Back or Backing	Surfacing	Flange Corner	Flange Edge
Arrow Side									
Other Side				Not Used			Not Used		
Both Sides		Not Used	Not Used	Not Used	Not Used	Not Used	Not Used	Not Used	Not Used
No Arrow Side or Other Side Significance	Not Used	Not Used		Not Used		Not Used	Not Used	Not Used	Not Used

Figure 2.4.9–2 Standard Welding Symbols from AWS A2.4

Basic Welding Symbols and Their Location Significance

Location Significance	Groove							Scarf for Brazed Joint
	Square	V	Bevel	U	J	Flare–V	Flare–Bevel	
Arrow Side						Not Permitted for Bridges	Not Permitted for Bridges	Not Permitted for Bridges
Other Side						Not Permitted for Bridges	Not Permitted for Bridges	Not Permitted for Bridges
Both Sides						Not Permitted for Bridges	Not Permitted for Bridges	Not Permitted for Bridges
No Arrow Side or Other Side Significance	Normally not used except for flush or upset welds	Not Used	Not Used	Not Used	Not Used	Not Permitted for Bridges	Not Permitted for Bridges	Not Permitted for Bridges

Supplementary Symbols								
	Weld–All Around	Field Weld	Melt–Thru	Consumable Insert	Backing Spacer	Contour		
						Flush	Convex	Concave
Symbols								

Figure 2.4.9–3 Standard Welding Symbols from AWS A2.4

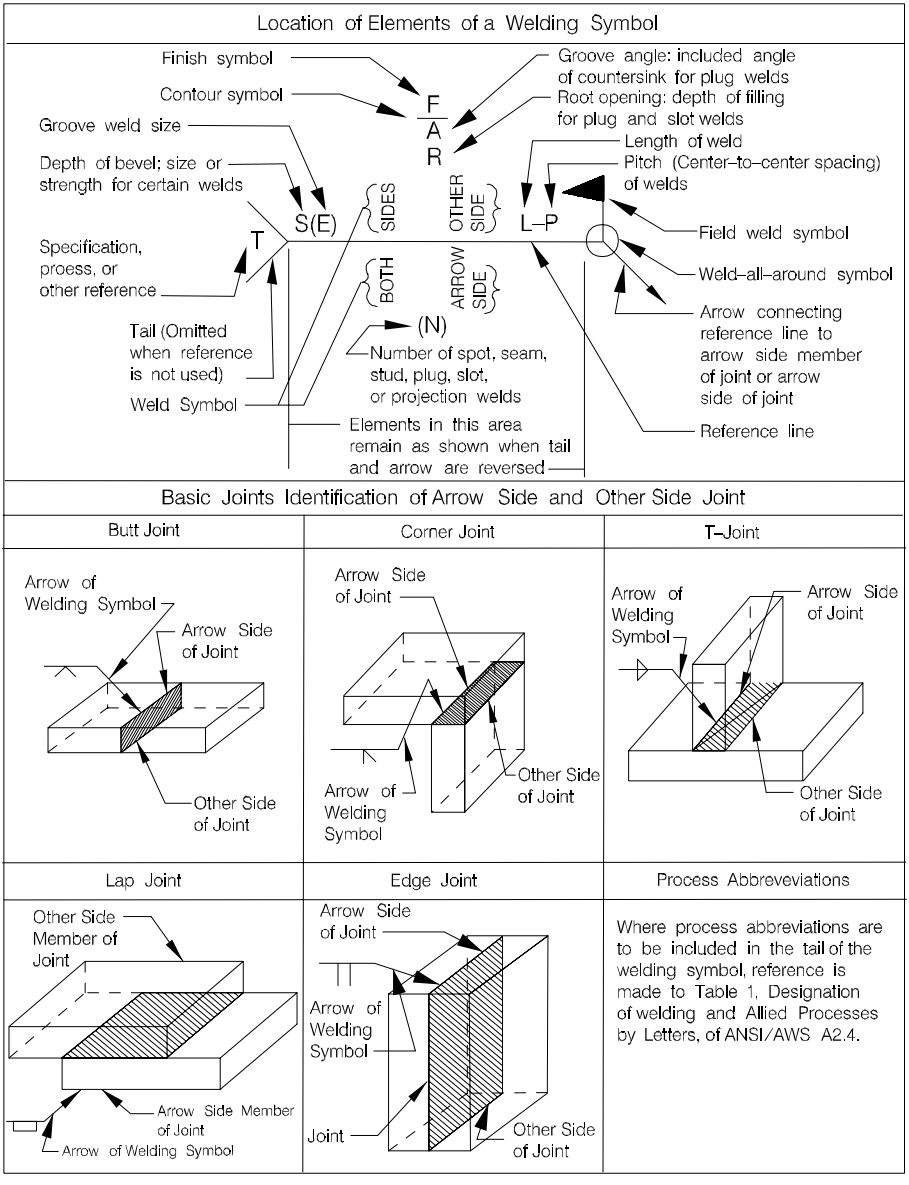

Figure 2.4.9–4 Standard Welding Symbols from AWS A2.4

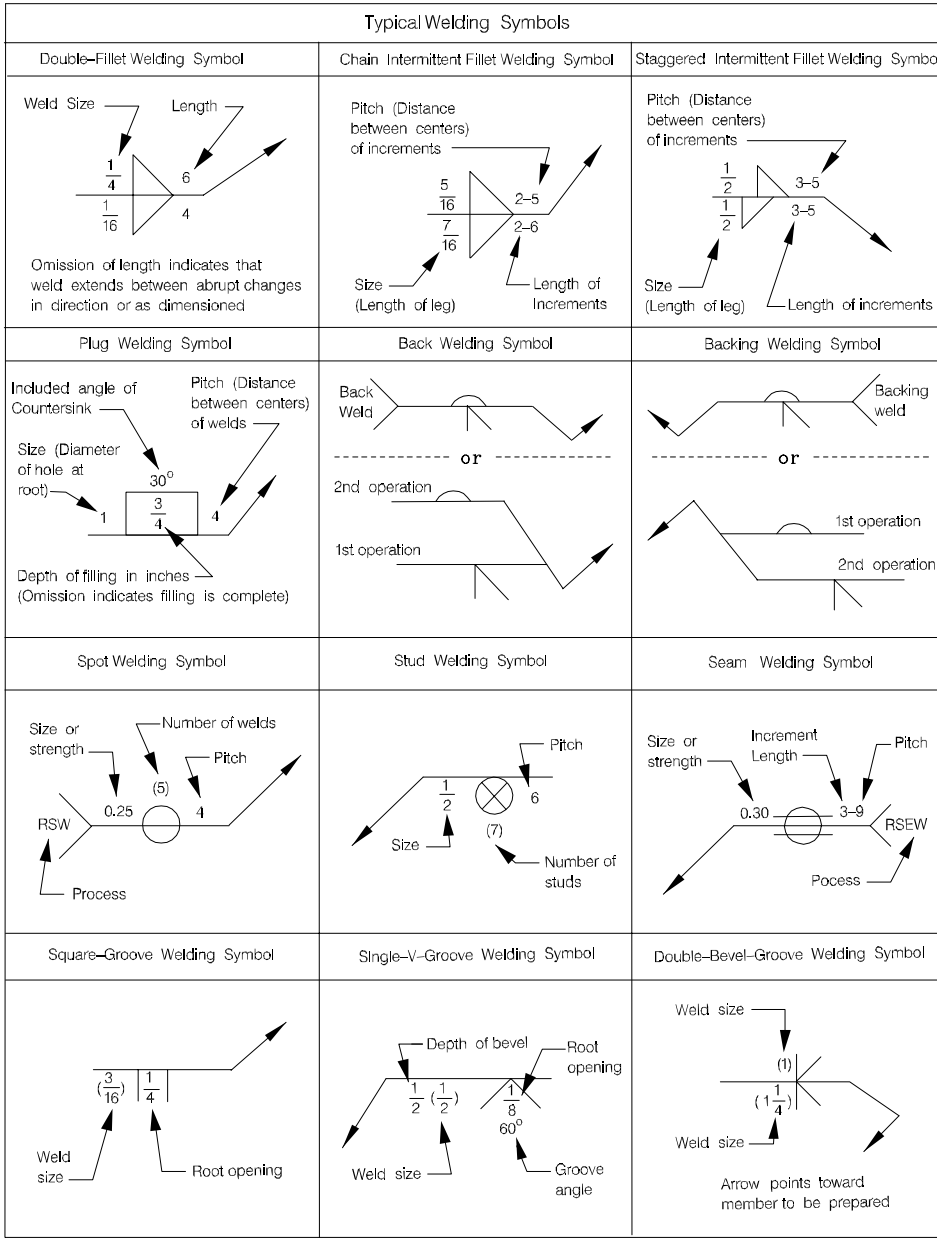

Figure 2.4.9–5 Standard Welding Symbols from AWS A2.4

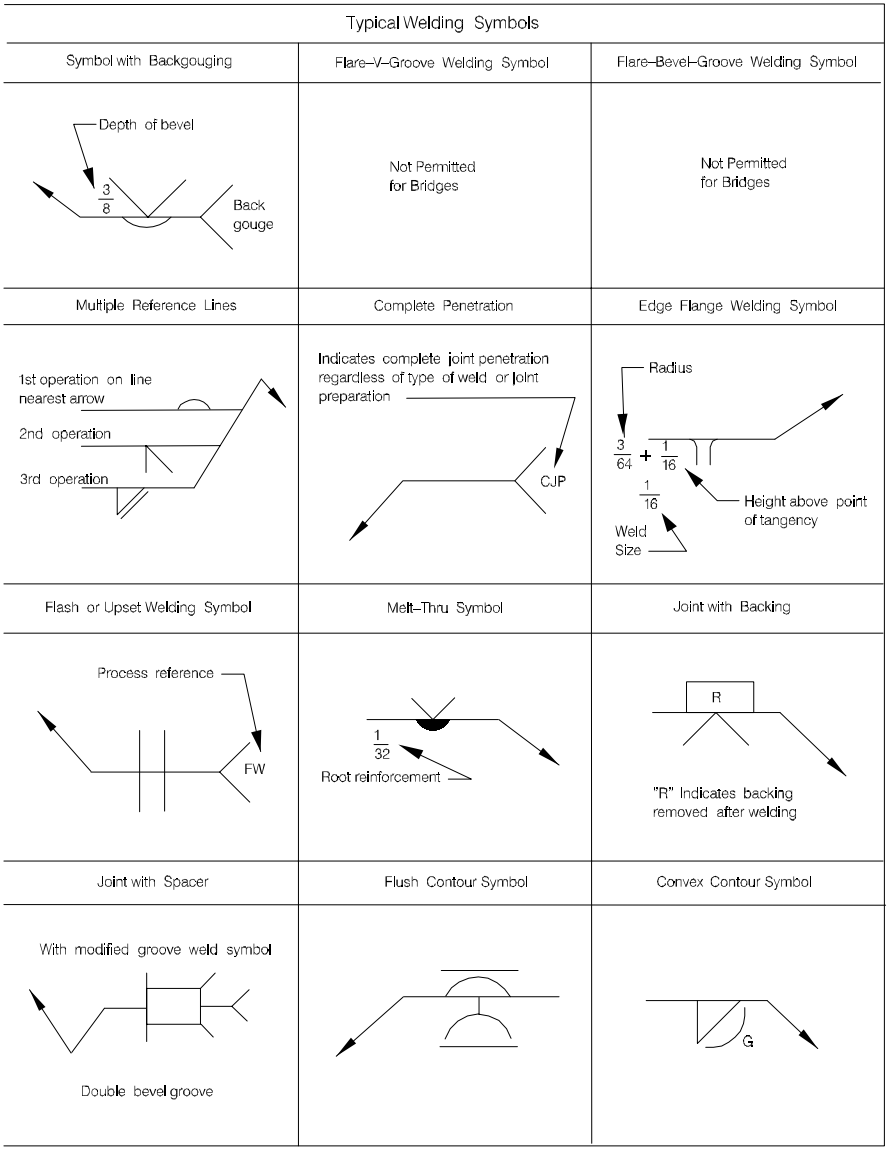

Figure 2.4.9–6 Standard Welding Symbols from AWS A2.4

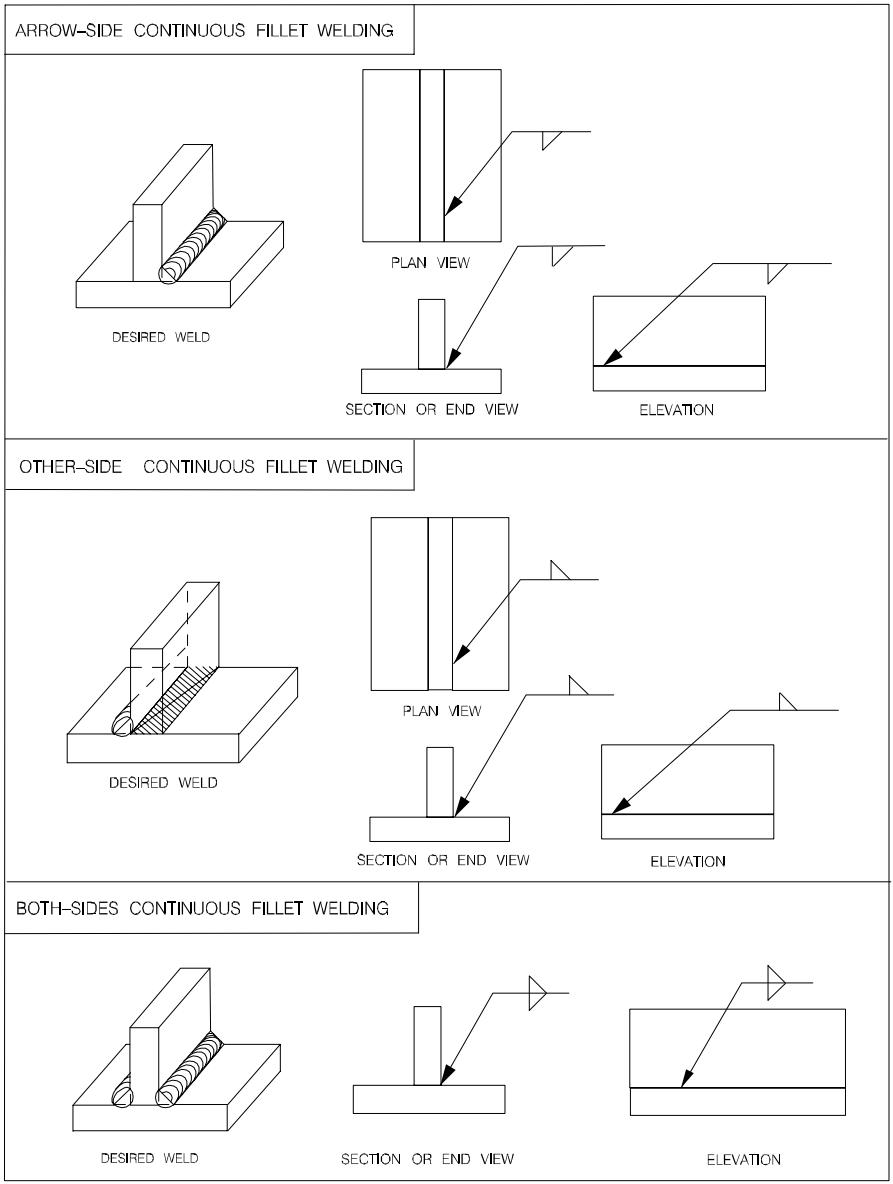

Figure 2.4.9–7 Application of Symbols – Fillet Welds – General

SIZE OF SINGLE–FILLET WELD

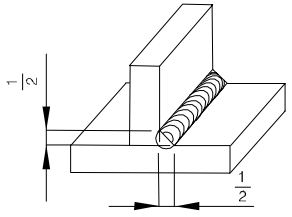

DESIRED WELD

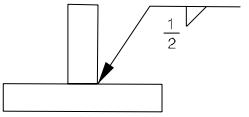

SYMBOL

SIZE OF UNEQUAL DOUBLE–FILLET WELDS

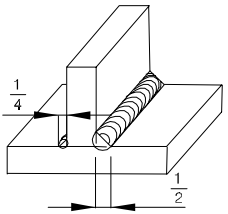

DESIRED WELD

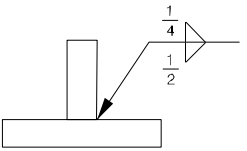

SYMBOL

SIZE OF FILLET WELD HAVING UNEQUAL LEGS

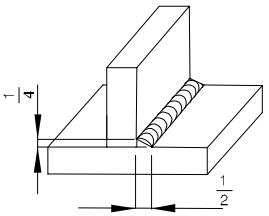

DESIRED WELD

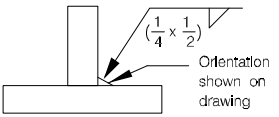

SYMBOL

LENGTHS AND LOCATION OF FILLET WELDS

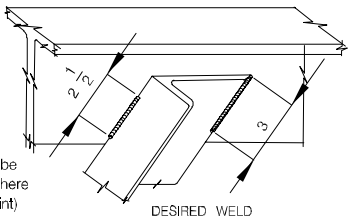

(Welds may be placed anywhere along the joint)

DESIRED WELD

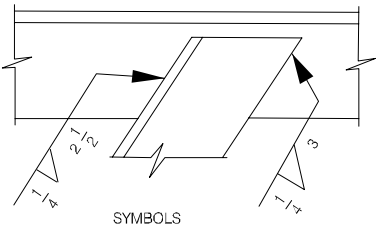

SYMBOLS

Figure 2.4.9–8 Application of Symbols – Fillet Welds – Dimensions

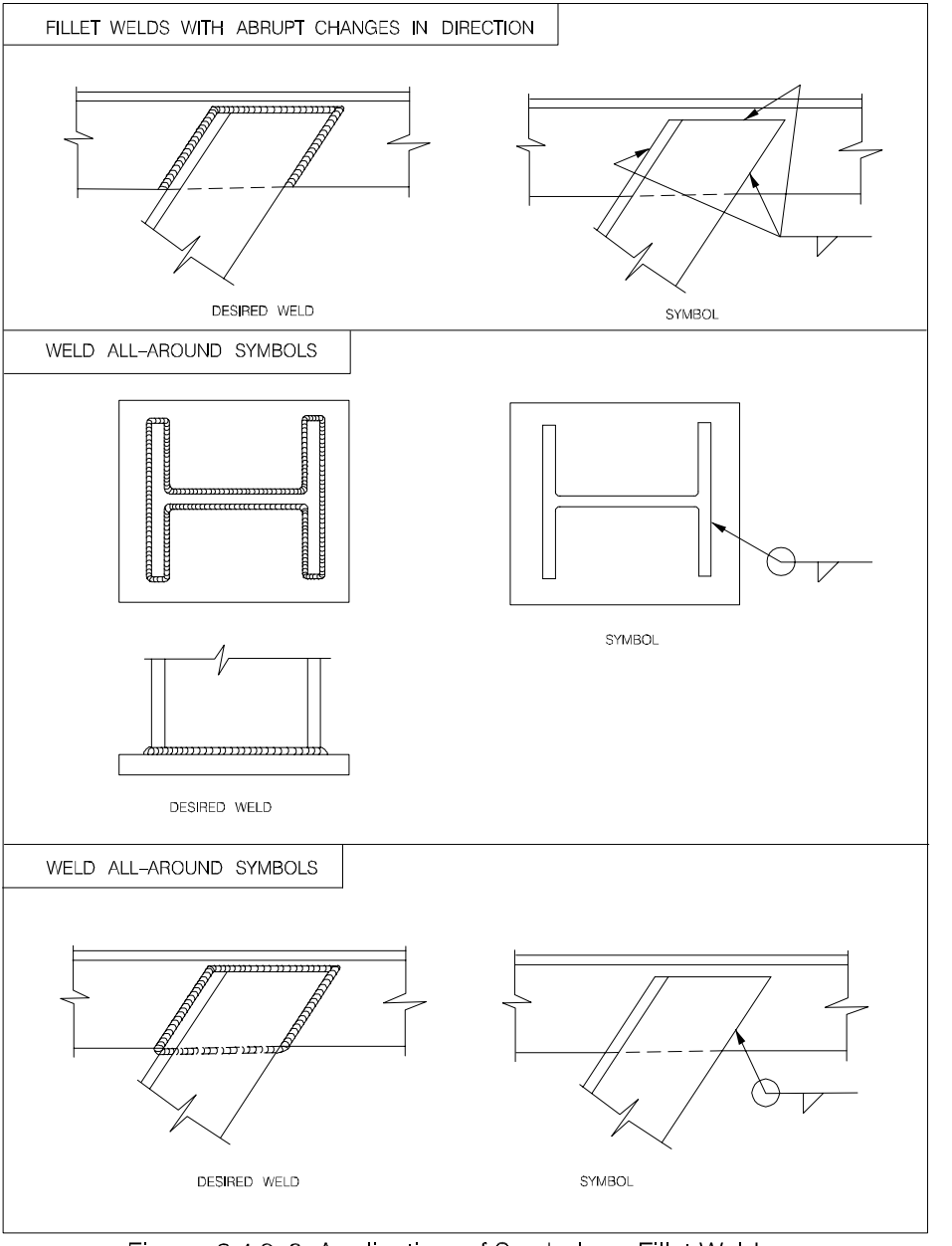

Figure 2.4.9–9 Application of Symbols – Fillet Welds

LENGTH AND PITCH OF INCREMENTS OF INTERMITTENT WELDING

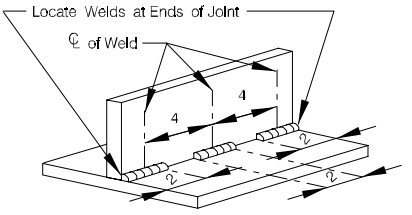

DESIRED FILLET WELDS

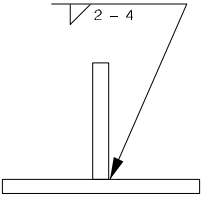

SYMBOL

LENGTH AND PITCH OF INCREMENTS OF CHAIN INTERMITTENT WELDING

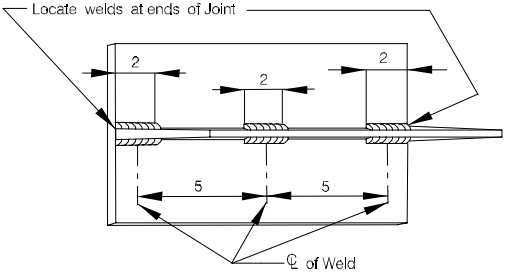

DESIRED FILLET WELDS

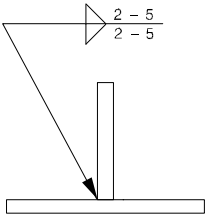

SYMBOL

DETAIL OF STEEL PILE SPLICE

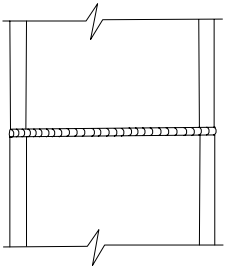

WELD FOR SPLICING PILE

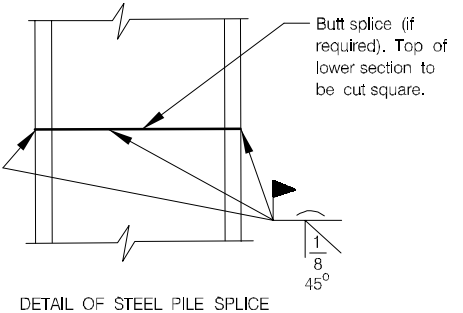

DETAIL OF STEEL PILE SPLICE

Figure 2.4.9–10 Application of Symbols

2.4.10 Reinforcing Steel Detailing

General

Unless otherwise specified, reinforcement shall be Grade 60, deformed bar * meeting the requirement of AASHTO M31, AASHTO M42 or AASHTO M53. Details for dimensioning reinforcing steel shall be in accordance with the CRSI Manual of Standard Practice.

**** Except that plain bars or plain wire may be used for spirals, hoops and wire fabric.***

Reinforcement Sizes

For general use, reinforcement may range from #4 through #11 bars with restrictions as described for individual structural components. #14 and #18 bars shall not be used without the permission of the Structural Project Manager.

Reinforcement Length

Minimum length

Minimum reinforcement length shall be 2'-0" except for dowel bars and anchor bars.

Maximum length

Maximum reinforcement length shall be as follows:

Non Epoxy Coated Reinforcement	
#4 bars	40'-0"
#5 bars and larger	60'-0"
Epoxy Coated Reinforcement	
#4 and #5 bars	40'-0"
#6 bars and larger	60'-0"

Epoxy coated transverse slab bars in some standard roadways may exceed 42'-10" and extend the full width of the slab without a splice. For non standard roadway widths, consult with the Structural Project Manager.

Bar Length Calculation

Reinforcing bar lengths shall be calculated to the nearest 1/8" for individual dimensions and rounded to the nearest 1" for the nominal and actual lengths.

Use **Table 2.4.10-1**, **Table 2.4.10-2**, **Table 2.4.10-3** for figuring reinforcing bar lengths with stirrup hooks or end hooks.

AASHTO 8.21

Reinforcement Spacing

Reinforcement spacing shall be in accordance with AASHTO Article 8.21 unless modified by the following criteria or elsewhere shown in Bridge Manuals.

Minimum Spacing - Moment Reinforcement	
Preferred Min. - Footings	6" centers
Preferred Min. - Slabs	6" centers
Absolute Min. - Slabs	5" centers
Preferred Min. - All Other	4" centers
Absolute Min.	2-1/2" clear

Maximum Spacing - Moment Reinforcement

Absolute Max. - Slabs	1.5x(slab thickness)
Absolute Max. - All Other	18"

Minimum Spacing - Shear Reinforcement

Absolute Min. - Substr. Beams	6" centers
Absolute Min. - P/S I Girder	5" centers

Maximum Spacing - Shear Reinforcement

Absolute Max. - Substr. Beams	12" centers
Absolute Max. - P/S I Girder (#4)	21" centers
Absolute Max. - P/S I Girder (#5)	24" centers

Minimum Spacing - Compression Reinforcement

Absolute Min. -	4-1/2" centers
Absolute Min.- Cols. (thru #10)	2" clear
Absolute Min.- Cols. (#11, #14, #18)	2-1/2" clear

Maximum Spacing - Compression Reinforcement

Absolute Max. - the minimum number of longitudinal reinforcing bars shall be six for circular members and four for bars in a rectangular arrangement.

AASHTO 8.18.2.3

Maximum spacing - Ties for Compression Reinforcement

Absolute Max. - Ties 12" centers

Concrete Protection and Cover

AASHTO 8.22.1

	Min. Cover
Conc. cast against and permanently exposed to earth	3"
Conc. exposed to earth or weather:	
primary reinforcement.	2"
stirrups, ties, spirals	1-1/2"
Conc. slab which have no positive corrosion protection:	
top reinforcement	3" *
bottom reinforcement	1"
Conc. not exposed to weather or in contract with ground:	
primary reinforcement	1-1/2"
stirrups, ties, spirals	1"
Conc. piles cast against or permanently exposed to earth . .	2"

The minimum concrete cover = 1-1/2" clear for stirrup and tie steel unless otherwise specified.

**** Absolute minimum cover 2-1/2" by AASHTO 8.22.1***

Reinforcing Bar Supports

The height of all reinforcing bar supports shall be carried to the nearest 1/4". See Missouri Standard Plans Drawing 706.35 for details of bar supports.

Table 2.4.10 - 1 Table for Figuring Reinforcing Bar Lengths

Stirrup and Tie bars Hooks only

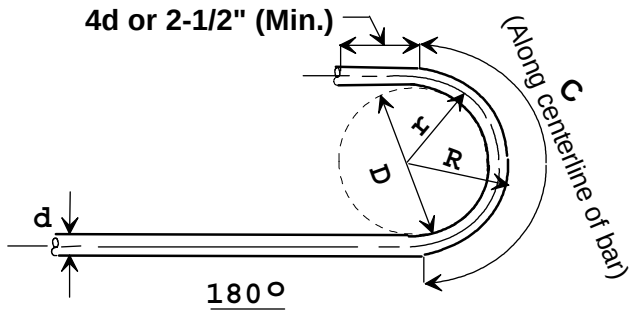

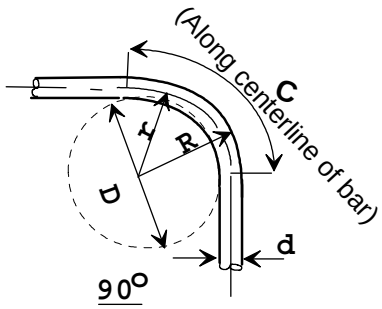

	d (d_b)	D **	r	R	C (90°)	Deduct (90°) *	A or G (90°) **
#3	3/8"	D=4d=1-1/2"	15/16"	1-1/8"	1-1/2"	3/4"	4"
#4	1/2"	D=4d=2"	1-1/4"	1-1/2"	2"	1"	4-1/2"
#5	5/8"	D=4d=2-1/2"	1-9/16"	1-7/8"	2-1/2"	1-1/4"	6"
#6	3/4"	D=6d=4-1/2"	2-5/8"	3"	4-1/8"	1-7/8"	12"

$d = d_b$ = Bar diameter
$r = D/2 + d/2$
$C\ (30^o) = 2\pi\ r\ (30^o/360^o) = \pi\ r\ /6$
$C\ (45^o) = 2\pi\ r\ (45^o/360^o) = \pi\ r\ /4$
$C\ (60^o) = 2\pi\ r\ (60^o/360^o) = \pi\ r\ /3$
$C\ (90^o) = 2\pi\ r\ (90^o/360^o) = \pi\ r\ /2$
Deduct $(90^o)^*$ = 2R -C (90°)

D = Finish inside bend diameter
$R = r + d/2$
$C\ (120^o) = 2\pi\ r\ (120^o/360^o) = 2\pi\ r\ /3$
$C\ (135^o) = 2\pi\ r\ (135^o/360^o) = 3\pi\ r\ /4$
$C\ (150^o) = 2\pi\ r\ (150^o/360^o) = 5\pi\ r\ /6$
$C\ (180^o) = 2\pi\ r\ (180^o/360^o) = \pi\ r$
Deduct $(180^o)^*$ = 4R -C (180°)

EXAMPLE:

#4 Stirrup with 2 - 90° bends

2 (2'-6") = 5'-0"
3'- 0" = 3'-0"
A + G =+) 9" **
8'-9"
2(*) =2 (Deduct) = -) 2" *(From Table)*
Actual Length **=** 8' -7"

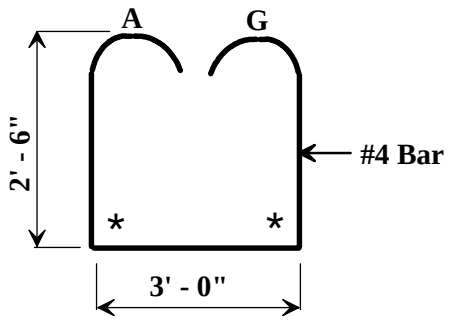

Note:
**** Do not deduct * for a bend where A or G is taken from CRSI Manual of Standard Practice.***
***** See CRSI Manual of Standard Practice (January 1997) page 6-5.***

Table 2.4.10 - 2 Table for Figuring Reinforcing Bar Lengths (All Grades, End Hooks)

	End Hook		∠ = 30°			∠ = 45°			∠ = 60°		
d	D	r	M	C	Deduct *	M	C	Deduct *	M	C	Deduct *
#3	2-1/4”	1-5/16”	3/8”	5/8”	1/8”	5/8”	1”	1/4”	7/8”	1-3/8”	3/8”
#4	3”	1-3/4”	9/16”	7/8”	1/4”	13/16”	1-3/8”	1/4”	1-1/8”	1-7/8”	3/8”
#5	3-3/4”	2-3/16”	11/16”	1-1/8”	1/4”	1-1/16”	1-3/4”	3/8”	1-7/16”	2-1/4”	5/8”
#6	4-1/2”	2-5/8”	13/16”	1-3/8”	1/4”	1-1/4”	2”	1/2”	1-3/4”	2-3/4”	3/4”
#7	5-1/4”	3-1/16”	15/16”	1-5/8”	1/4”	1-7/16”	2-3/8”	1/2”	2”	3-1/4”	3/4”
#8	6”	3-1/2”	1-1/16”	1-7/8”	1/4”	1-11/16”	2-3/4”	5/8”	2-5/16”	3-5/8”	1”
#9	9”	5-1/16”	1-1/2”	2-5/8”	3/8”	2-5/16”	4”	5/8”	3-1/4”	5-1/4”	1-1/4”
#10	10”	5-5/8”	1-11/16”	3”	3/8”	2-9/16”	4-3/8”	3/4”	3-5/8”	5-7/8”	1-3/8”
#11	11”	6-3/16”	1-13/16”	3-1/4”	3/8”	2-7/8”	4-7/8”	7/8”	4”	6-1/2”	1-1/2”

	∠ = 90°			∠ = 130°			∠ = 135°		
d	R	C	Deduct*	R	C	Deduct*	R	C	Deduct*
#3	1-1/2”	2”	1”	2-5/8”	2-3/4”	2-1/2”	3-5/8”	3-1/8”	4-1/8”
#4	2”	2-3/4”	1-1/4”	3-7/16”	3-5/8”	3-1/4”	4-13/16”	4-1/8”	5-1/2”
#5	2-1/2”	3-3/4”	1-5/8”	4-5/16”	4-5/8”	4”	6-1/16”	5-1/8”	7”
#6	3”	4-1/8”	1-7/8”	5-3/16”	5-1/2”	4-7/8”	7-1/4”	6-1/8”	8-3/8”
#7	3-1/2”	4-3/4”	2-1/4”	6-1/16”	6-3/8”	5-3/4”	8-7/16”	7-1/4”	9-5/8”
#8	4”	5-1/2”	2-1/2”	6-15/16”	7-3/8”	6-1/2”	9-11/16”	8-1/4”	11-1/8”
#9	5-5/8”	8”	3-1/4”	9-3/4”	10-5/8”	8-7/8”	13-9/16”	11-7/8”	15-1/4”
#10	6-1/4”	8-7/8”	3-5/8”	10-13/16”	11-3/4”	9-7/8”	15-1/16”	13-1/4”	16-7/8”
#11	6-7/8”	9-3/4”	4”	11-15/16”	13”	10-7/8”	16-5/8”	14-5/8”	18-5/8”

	∠ = 130°		
d	H	C	Deduct*
#3	5-5/8”	3-3/8”	7-7/8”
#4	7-1/16”	4-5/8”	9-1/2”
#5	9-5/16”	5-3/4”	12-7/8”
#6	11-3/16”	6-7/8”	15-1/2”
#7	13-1/16”	8”	18-1/8”
#8	14-15/16”	9-1/8”	20-3/4”
#9	21”	13-1/4”	2’-4-3/4”
#10	23-5/16”	14-3/4”	2’-7-7/8”
#11	2’-1-11/16”	16-1/4”	2’-11-1/8”

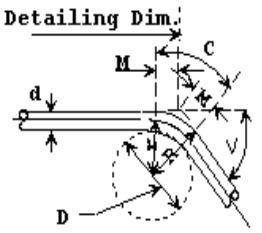

30° - 45° - 60°

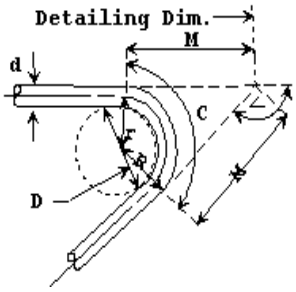

120° - 135° - 150°

C = Length along centerline of bar. D (#3 thru #8) = 6d, D(#9 thru #11) = 8d Above tables only.

Deduct (all above angles except 90°) * = 2M - C or Deduct (90° Only) * = 2R - C

M (all above angles except 90°) = R tan (/2) or M (90° Only) = R

For additional coding and information see preceding page.

**** Do not deduct * for a bend where A or G is taken from CRSI Manual of Standard Practice***

Table 2.4.10 - 3 Table for Figuring Reinforcing Bar Lengths (Stirrup Hooks)

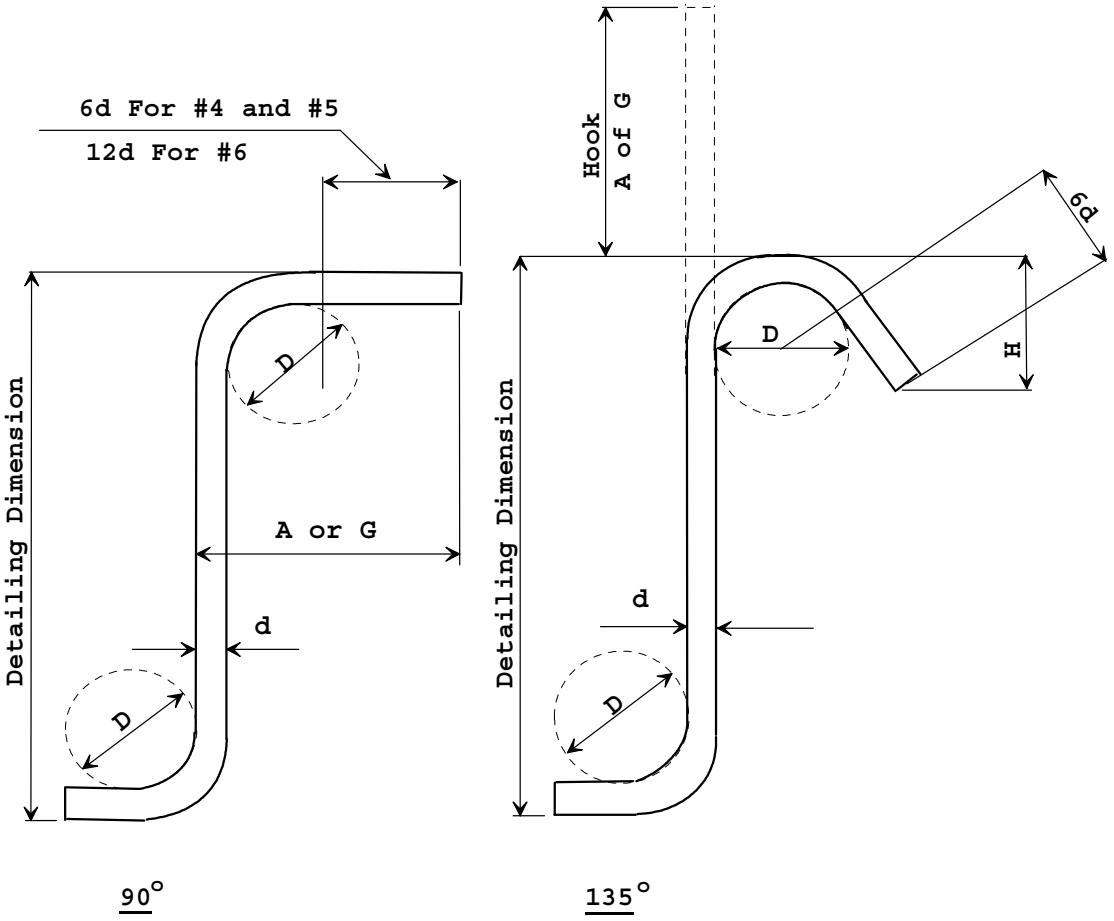

STIRRUP HOOK DIMENSIONS *				
GRADE 40 - 50 - 60 ksi				
BAR SIZE	D (inch)	90^0 Hook	135^0 Hook	
		Hook A or G	Hook A or G	Approx. H
#4	2"	4-1/2"	4-1/2"	3"
#5	2-1/2"	6"	5-1/2"	3-3/4"
#6	4-1/2"	12"	8"	4-1/2"

** See CRSI Manual of Standard Practice (January 1997) page 6-5.*

2.4.11 Development and Splicing of Reinforcement

2.4.11.1 General

Development of Tension Reinforcement

AASHTO 8.25

Development lengths for tension reinforcement shall be calculated in accordance with AASHTO Article 8.25. Development length modification factors described in AASHTO Articles 8.25.3.2 and 8.25.3.3 shall only be used in situations where development length without these factors is difficult to attain. All other modification factors shown shall be used.

Development lengths for tension reinforcement have been tabulated on the following pages and include the modification factors except those described above.

Lap Splices of Tension Reinforcement

AASHTO 8.32

Lap splices of reinforcement in tension shall be calculated in accordance with AASHTO Article 8.32.1 and 8.32.3. Class C splices are preferred when possible, however it is permissible to use Class A or B when physical space is limited. The designer shall satisfy AASHTO Table 8.32.3.2 when using Class A or B splices. It should be noted that As required is based on the stress encountered at the splice location, which is not necessarily the maximum stress used to design the reinforcement.

ACI 318R-89 7.12.2.3

Temperature and shrinkage reinforcement is assumed to fully develop the specified yield stresses. Therefore the development length shall not be reduced by (A_S required)/(A_S supplied).

Splice lengths for tension reinforcement have been tabulated on the following pages and include the development length modifications as described above.

Development of Tension Hooks

AASHTO 8.29

Development of tension hooks shall be calculated in accordance with AASHTO Article 8.29. Hook length modification factors described in Articles 8.29.3.3 and 8.29.3.4 shall only be used in situations where hook length without these factors is difficult to attain. All other modification factors shown shall be used.

Development lengths of tension hooks have been tabulated on the following pages and include the modification factors except those described above.

Development of Compression Reinforcement

AASHTO 8.26

Development lengths for compression reinforcement shall be calculated in accordance with AASHTO Article 8.26. Development length modification factors described in AASHTO Articles 8.26.2.1 and 8.26.2.2 shall only be used in situations where development length without these factors is difficult to attain. All other modification factors shown shall be used.

Development lengths for compression reinforcement have been tabulated on the following pages and include the modification factors except those described above.

Lap Splices of Compression Reinforcement

AASHTO 8.32

Lap splices of reinforcement in compression shall be calculated in accordance with AASHTO Article 8.32.1 and 8.32.4.

Splice lengths for compression reinforcement have been tabulated on the following pages.

Mechanical Bar Splices

AASHTO 8.32.2

Mechanical bar splices may be used in situations where it is not possible or feasible to use lap splices. Mechanical bar splices shall meet the criteria of AASHTO Article 8.32.2. Refer to the manufacturers literature for more information on the design of mechanical bar splices.

2.4.11.2. Development and Tension Lap Splice Lengths - Top Bars (Fy = 60 ksi)

TOP BARS

Step 1	Step 2	Step 3	Step 4	Step 5								
		f'c	Bars	#3	#4	#5	#6	#7	#8	#9	#10	#11
< 6" on center or < 3" clear cover (direction of spacing)	NON-EPOXY	3 ksi	L_d	13	17	21	28	37	49	62	78	96
			B	17	22	28	36	48	63	80	102	125
			C	22	29	36	47	63	82	105	133	163
		4 ksi	L_d	13	17	21	26	32	42	54	68	83
			B	17	22	28	33	42	55	70	88	108
			C	22	29	36	43	55	71	91	115	142
	EPOXY 1 (<6d_b clear spacing or <3d_b cover any direction)	3 ksi	L_d	16	21	26	33	45	59	75	95	117
			B	20	27	34	43	59	77	97	123	152
			C	27	35	44	56	77	100	127	161	198
		4 ksi	L_d	16	21	26	31	39	51	65	82	101
			B	20	27	34	40	51	66	84	107	131
			C	27	35	44	53	66	87	110	139	172
	EPOXY 2 (all other situations)	3 ksi	L_d	15	20	25	32	43	56	71	90	111
			B	19	26	32	41	56	73	92	117	144
			C	25	33	42	53	73	95	120	152	188
		4 ksi	L_d	15	20	25	29	37	48	62	78	96
			B	19	26	32	38	48	63	80	101	125
			C	25	33	42	50	63	82	104	132	163
		f'c	Bars	#3	#4	#5	#6	#7	#8	#9	#10	#11
≥6" on center and ≥3" clear cover (direction of spacing)	NON-EPOXY	3 ksi	L_d	12	14	17	22	30	39	50	63	77
			B	16	18	22	29	39	51	64	81	100
			C	21	23	29	37	51	66	84	106	131
		4 ksi	L_d	12	14	17	21	26	34	43	54	67
			B	16	18	22	27	34	44	56	70	87
			C	21	23	29	35	44	57	73	92	113
	EPOXY 1 (<6d_b clear spacing or <3d_b cover any direction)	3 ksi	L_d	13	17	21	27	36	47	60	76	94
			B	16	22	27	35	47	61	78	99	121
			C	21	28	35	45	61	80	102	129	159
		4 ksi	L_d	13	17	21	25	32	41	52	66	81
			B	16	22	27	32	41	53	68	85	105
			C	21	28	35	42	53	69	88	112	137
	EPOXY 2 (all other situations)	3 ksi	L_d	12	16	20	25	34	45	57	72	89
			B	16	21	26	33	45	58	74	93	115
			C	21	27	33	43	58	76	96	122	150
		4 ksi	L_d	12	16	20	24	30	39	49	62	77
			B	16	21	26	31	39	50	64	81	100
			C	21	27	33	40	50	66	84	106	130

Top reinforcement is placed so that more than 12" of concrete is cast below the reinforcement.
Class A splice =1.0 L_d, Class B splice =1.3 L_d, Class C splice =1.7 L_d
Use development and tension lap splices of f'c = 4 ksi for concrete strengths greater than 4 ksi.

2.4.11.3. Development and Tension Lap Splice Lengths - Other Than Top Bars (Fy = 60 ksi)

NOT TOP BARS

Step 1	Step 2	Step 3	Step 4	Step 5								
		f'c	Bars	#3	#4	#5	#6	#7	#8	#9	#10	#11
< 6" on center or < 3" clear cover (direction of spacing)	NON-EPOXY	3 ksi	L_d	12	12	15	20	27	35	44	56	69
			B	12	16	20	26	35	45	57	73	89
			C	16	21	26	33	45	59	75	95	117
		4 ksi	L_d	12	12	15	18	23	30	38	49	60
			B	12	16	20	24	30	39	50	63	78
			C	16	21	26	31	39	51	65	82	101
	EPOXY 1 (<6d_b clear spacing or <3d_b cover any direction)	3 ksi	L_d	14	18	23	30	40	52	66	84	103
			B	18	24	30	38	52	68	86	109	134
			C	23	31	39	50	68	88	112	142	175
		4 ksi	L_d	14	18	23	27	35	45	57	73	89
			B	18	24	30	36	45	59	74	94	116
			C	23	31	39	46	59	76	97	123	152
	EPOXY 2 (all other situations)	3 ksi	L_d	12	14	18	23	31	40	51	64	79
			B	14	18	23	29	40	52	66	83	103
			C	18	24	30	38	52	68	86	109	134
		4 ksi	L_d	12	14	18	21	27	35	44	56	69
			B	14	18	23	27	35	45	57	72	89
			C	18	24	30	36	45	59	75	94	116
		f'c	Bars	#3	#4	#5	#6	#7	#8	#9	#10	#11
≥ 6" on center and ≥ 3" clear cover (direction of spacing)	NON-EPOXY	3 ksi	L_d	12	12	12	16	22	28	36	45	55
			B	12	13	16	21	28	36	46	58	72
			C	13	17	21	27	36	47	60	76	94
		4 ksi	L_d	12	12	12	15	19	24	31	39	48
			B	12	13	16	19	24	31	40	50	62
			C	13	17	21	25	32	41	52	66	81
	EPOXY 1 (<6d_b Clear spacing or <3d_b cover any direction)	3 ksi	L_d	12	15	18	24	32	42	53	67	83
			B	15	19	24	31	42	54	69	87	107
			C	19	25	31	40	54	71	90	114	140
		4 ksi	L_d	12	15	18	22	28	36	46	58	72
			B	15	19	24	29	36	47	60	75	93
			C	19	25	31	37	47	61	78	99	121
	EPOXY 2 (all other situations)	3 ksi	L_d	12	12	14	18	25	32	41	52	63
			B	12	15	18	24	32	42	53	67	82
			C	15	19	24	31	42	54	69	87	108
		4 ksi	L_d	12	12	14	17	21	28	35	45	55
			B	12	15	18	22	28	36	46	58	71
			C	15	19	24	29	36	47	60	76	93

Class A splice =1.0 L_d, Class B splice =1.3 L_d, Class C splice =1.7L_d
Use development and tension lap splices of f'c = 4 ksi for concrete strengths greater than 4 ksi.

2.4.11.4. Development and Lap Splice Lengths - Bars in Compression (Fy = 60 ksi)

Step 1	Step 2	Step 3	Step 4	Step 5										
		f'c	Bars	#3	#4	#5	#6	#7	#8	#9	#10	#11	#14 (*)	#18 (*)
Compression	Development Length	3 ksi	L_d	9	11	14	17	20	22	25	28	31	38	50
			$L_{d,\ spiral}$	8	9	11	13	15	17	19	21	24	28	38
		4 ksi	L_d	8	10	12	15	17	19	22	25	27	33	43
			$L_{d,\ spiral}$	8	8	9	11	13	15	17	19	21	25	33
	Lap Splices (*)	All f'c	Std. Lap	12	15	19	23	27	30	34	39	43	51	68
			With Ties	12	13	16	19	22	25	29	32	36	43	57
			With Spiral	12	12	15	17	20	23	26	29	32	39	51

Development length for spirals, $L_{d,\ spiral}$, should be used if reinforcement is enclosed in a spiral of not less than 1/4" diameter and no more than 4" pitch. See AASHTO 8.26 for special conditions.

All values are for splices with the same size bars. For different size bars, see AASHTO 8.32.4.

(*) Lap splices for #14 and #18 bars are not permitted except as column to footing dowels.

2.4.11.5 Development of Standard Hooks in Tension, L_{dh} (Fy = 60 ksi)

The development length, L_{dh}, is measured from the critical section to the outside edge of hook. The tabulated values are valid for both epoxy and non-epoxy coated hooks.

Step 1	Step 2	Step 3	Step 4	Step 5										
		f'c	Bars	#3	#4	#5	#6	#7	#8	#9	#10	#11	#14 (*)	#18 (*)
Hooks in Tension (*)	Case A	3 ksi	Non-Epoxy	9	11	14	17	20	22	25	28	31	38	50
			Epoxy	11	13	17	20	24	26	30	34	37	46	60
		4 ksi	Non-Epoxy	8	10	12	15	17	19	22	25	27	33	43
			Epoxy	10	12	14	18	20	23	26	30	32	40	52
	Case B	3 ksi	Non-Epoxy	6	8	10	12	14	16	18	20	22	38	50
			Epoxy	7	10	12	14	17	19	22	24	26	46	60
		4 ksi	Non-Epoxy	6	7	9	10	12	14	15	17	19	33	43
			Epoxy	7	8	11	12	14	17	18	20	23	40	52
	Min. L_{dh} for 6" (Min.) required at free edge or const. joint			10	11	11	12	13	14	17	18	19	23	29

Case A - For #11 bar and smaller, side cover (normal to plane of hook) less than 2-1/2 inches and for a 90 degree hook with cover on the hook extension less than 2 inches.

Case B - For #11 bar and smaller, side cover (normal to plane of hook) greater than 2-1/2 inches and for a 90-dgree hook with cover on the hook extension 2 inches or greater.

(*) See Structural Project Manager before using #14 or #18 hook.

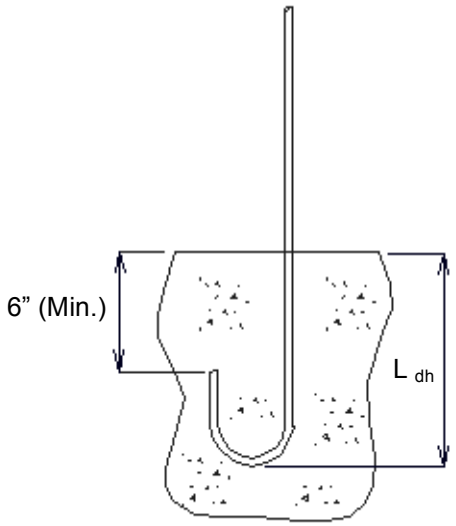

DETAL NEAR FREE EDGE OR CONSTRUCTION JOINT

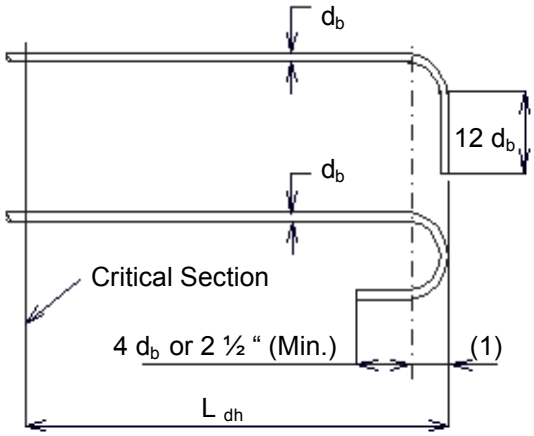

(1) = $4d_b$ (#3 thru #8)
(1) = $5d_b$ (#9, #10 and #11)
(1) = $6d_b$ (#14 and #18)

HOOKED-BAR DETAILS FOR DEVELOPMENT OF STANDARD HOOKS

2.4.11.6 Development of non-epoxy coated Grade 40 deformed bars in tension, L_d (AASHTO 8.25)

Bars spaced laterally less than 6 inches on center or less than 3 inches concrete cover in direction of the spacing

Bar	f ‘ c = 3 ksi		f ‘ c = 4 ksi		f ‘ c = 5 ksi	
	*L*d	*L*d Top bar	*L*d	*L*d Top bar	*L*d	*L*d Top bar
#3	12	12	12	12	12	12
#4	12	12	12	12	12	12
#5	12	14	12	14	12	14
#6	13	19	12	17	12	17
#7	18	25	16	22	14	20
#8	23	33	20	28	18	25
#9	30	41	26	36	23	32
#10	38	52	33	45	29	41
#11	46	64	40	56	36	50
#14	63	87	54	76	49	68
#18	81	113	70	98	63	88

Bars spaced laterally 6 inches or more on center and at least 3 inches concrete cover in direction of the spacing

Bar	f ‘ c = 3 ksi		f ‘ c = 4 ksi		f ‘ c = 5 ksi	
	*L*d	*L*d Top bar	*L*d	*L*d Top bar	*L*d	*L*d Top bar
#3	12	12	12	12	12	12
#4	12	12	12	12	12	12
#5	12	12	12	12	12	12
#6	12	15	12	14	12	14
#7	15	20	13	18	12	16
#8	19	26	16	23	15	20
#9	24	33	21	29	19	26
#10	30	42	26	36	23	33
#11	37	52	32	45	29	40
#14	50	70	44	61	39	54
#18	65	90	56	78	50	70

2.4.11.7 Minimum lap length for non-epoxy coated Grade 40 tension lap splices, L_{lap} (AASHTO 8.32)

Bars spaced less than 6 inches laterally on center and at least 3 inches concrete cover in direction of the spacing

	Other than Top Bars									Top Bars								
	f ‘c = 3 ksi			f ‘c = 4 ksi			f ‘c = 5 ksi			f ‘c = 3 ksi			f ‘c = 4 ksi			f ‘c = 5 ksi		
Bar	A	B	C	A	B	C	A	B	C	A	B	C	A	B	C	A	B	C
#3	12	12	12	12	12	12	12	12	12	12	16	21	12	16	21	12	16	21
#4	12	12	14	12	12	14	12	12	14	12	16	21	12	16	21	12	16	21
#5	12	13	17	12	13	17	12	13	17	14	19	24	14	19	24	14	19	24
#6	13	17	22	12	16	21	12	16	21	19	24	31	17	22	29	17	22	29
#7	18	23	30	16	20	26	14	19	24	25	32	42	22	28	37	20	26	34
#8	23	30	40	20	26	34	18	24	31	33	42	55	28	37	48	25	33	43
#9	30	38	50	26	33	43	23	30	39	41	54	70	36	47	61	32	42	54
#10	38	49	63	33	42	55	29	38	49	52	68	89	45	59	77	41	53	69
#11	46	60	78	40	52	68	36	46	61	64	84	109	56	72	95	50	65	85

Bars spaced 6 inches or more laterally on center and at least 3 inches concrete cover in direction of the spacing

	Other than Top Bars									Top Bars								
	f ‘c = 3 ksi			f ‘c = 4 ksi			f ‘c = 5 ksi			f ‘c = 3 ksi			f ‘c = 4 ksi			f ‘c = 5 ksi		
Bar	A	B	C	A	B	C	A	B	C	A	B	C	A	B	C	A	B	C
#3	12	12	12	12	12	12	12	12	12	12	16	21	12	16	21	12	16	21
#4	12	12	12	12	12	12	12	12	12	12	16	21	12	16	21	12	16	21
#5	12	12	14	12	12	14	12	12	14	12	16	21	12	16	21	12	16	21
#6	12	14	18	12	13	17	12	13	17	15	19	25	14	18	23	14	18	23
#7	15	19	24	13	16	21	12	15	20	20	26	34	18	23	29	16	21	27
#8	19	24	32	16	21	28	15	19	25	26	34	44	23	29	38	20	26	34
#9	24	31	40	21	27	35	19	24	31	33	43	56	29	37	49	26	33	44
#10	30	39	51	26	34	44	23	30	39	42	54	71	36	47	62	33	42	55
#11	37	48	63	32	42	54	29	37	49	52	67	87	45	58	76	40	52	68

Note: Design plan details shall indicate splice length.

2.4.12 Miscellaneous

Negative Moment Steel over Intermediate Supports

Dimension negative moment steel over intermediate supports as shown.

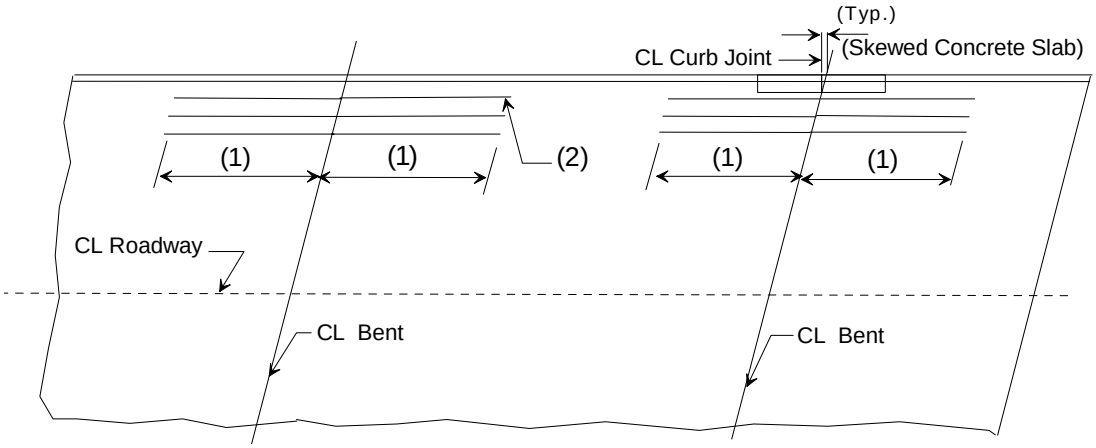

Prestressed Structures:

(1) Bar length by design.
(2) Reinforcement placed between longitudinal temperature reinforcing in top.
Bar size: #5 bars at 7-1/2" cts. (Min.)
#8 bars at 5" cts. (Max.)

Steel Structures:

(1) Extend into positive moment region beyond "Anchor" Stud shear connectors at least **40 x bar diameter x 1.5** (Epoxy Coated Factor)(*) as shown below. (AASHTO 10.38.4.4 & AASHTO 8.25.2.3)
(2) Use #6 bars at 5" cts. between longitudinal temperature reinforcing in top.

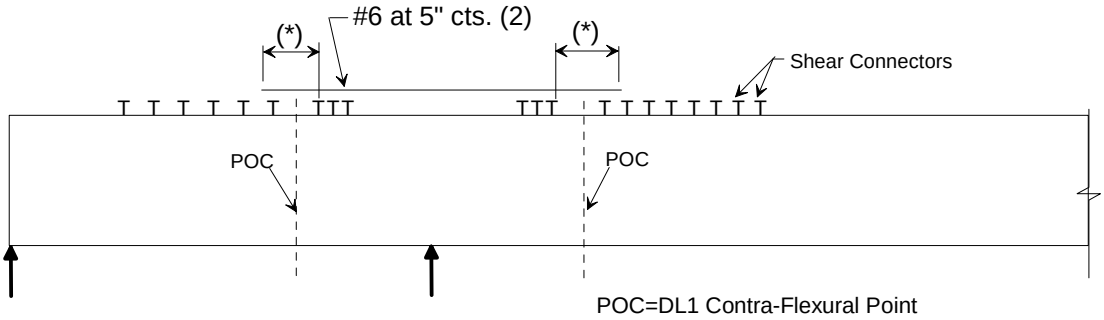

(*) 40 x bar diameter x 1.5 = 40 x 0.75" x 1.5 = 45" for #6 epoxy coated bar.

Notch Toughness

Wide Flange Beams Structures:

See Section 4, page H1-C, for proper notes to be placed on plans.

Plate Girders Structures:

See Section 4, page H1-C, for proper notes to be placed on plans.
Typical examples for location of *** on plans for tension flange only of plate girders are shown below.

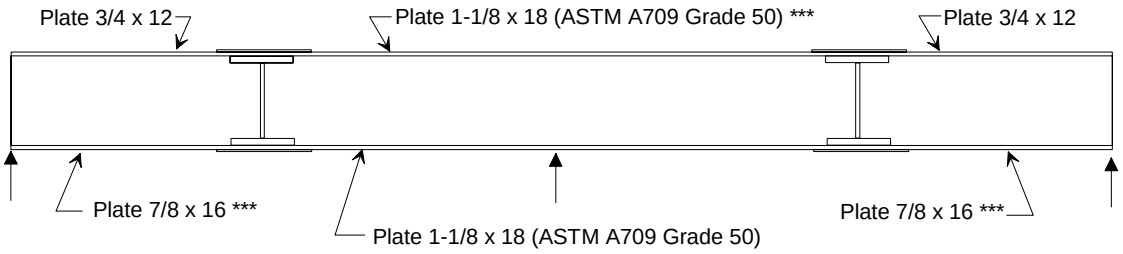

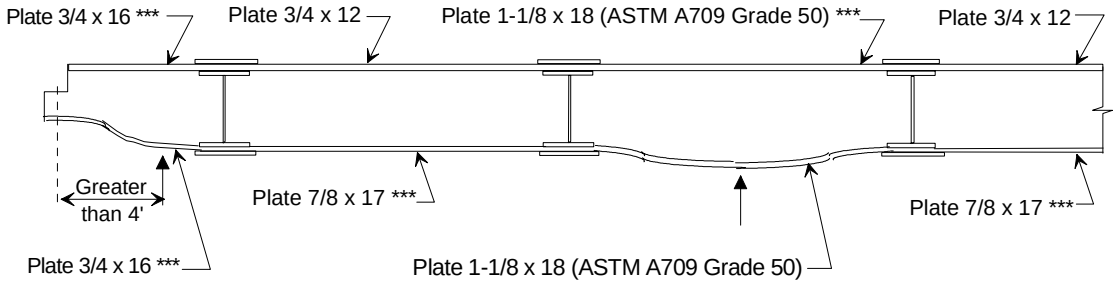

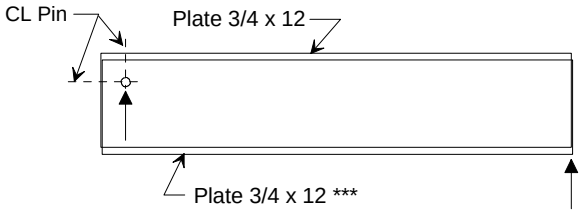

Note:
All web plates are subject to notch toughness.

Other special locations for *** will be for tension flanges of floorbeams in straight girder bridges, and for top and bottom flanges of floorbeams in curved girder bridges.

When any splices are located in a moment area, all flange and web splice plates for the bridge are subject to notch toughness requirements. Show *** with detail of flange splice plate.

*Fracture Control Plan (FCP) **

Fracture Control Plan (FCP), Section 12 of ANSI/AASHTO/AWS D1.5-95, shall apply to fracture critical nonredundant member.

AASHTO LRFD 1.3.4
AASHTO 10.3.1

Main elements and components whose failure is expected to cause the collapse of the bridge shall be designated as failure-critical and the associated structural system as non-redundant. Example of nonredundant members are flange and web plates in one or two girder bridges, main one-element truss members and hanger plates.

AASHTO LRFD 6.6.2.

For non-redundant steel structures or members, the designer shall determine which, if any, component is a Fracture Critical Member (FCM). The location of all FCMs shall be clearly delineated on the design plans.

ANSI/AASHTO/AWS D1.5-95 12.2

FCMs are defined as tension members or tension components of bending members (including those subject to reversal of stress), the failure of which would be expected to result in collapse of the bridge. The designation "FCM" shall mean fracture critical member or member component. Members and components that are not subject to tension stress under any condition of live load are not fracture critical.
Any attachment welded to a tension zone of an FCM shall be considered an FCM when any dimension of the attachment exceeds 4 inches in the direction parallel to the calculated tensile stress in the FCM. Attachments designated FCM shall meet all requirements of FCP.
All welds to FCMs shall be considered fracture critical and shall conform to the requirements of FCP. Welds to compression members or compression area of bending member are not fracture critical.

AASHTO LRFD 6.6.2.

FCMs shall be fabricated in accordance with FCP. Material for FCM shall be tested in accordance with AASHTO T243 (ASTM A673), Frequency P. Material for components not designed as fracture critical shall be tested in conformance with AASHTO T243 (ASTM A673), Frequency H. The Section 712 of the Standard Specification and FCM Special Provisions will include additional requirement for material, welding, inspection and manufacturing.

Notes to be placed on contract plans are as follows:
General Notes:
This structure contains non-redundant Fracture Critical Members (F.C.M.). See Special Provisions for F.C.M. requirements.
Notes for Superstructure - Steel Spans
(Place FCM next to the member or member components)
(Place following notes near the FCM)
FCM indicates Fracture Critical Member, see Special Provisions.
The welds for FCM's are controlled by ANSI/AASHTO/AWS D1.5-95.

The notes may replace the notch toughness requirement now being used. If there are components requiring notch toughness that are not FCM's on the same plans as FCM's both notes will be necessary.

**** The designation "FCP" shall mean fracture control plan and shall include all provisions of Section 12 AASHTO/AWS Fracture Control Plan (FCP) for Nonredundant Members of ANSI/AASHTO/AWS D1.5-95, Bridge Welding Code.***

Decimal Equivalents Table

Decimals of a Foot for Inches and Fractions													
		0"	1"	2"	3"	4"	5"	6"	7"	8"	9"	10"	11"
0.0000"	0"	0.0000	0.0833	0.1667	0.2500	0.3333	0.4167	0.5000	0.5833	0.6667	0.7500	0.8333	0.9167
0.0625"	1/16"	0.0052	0.0885	0.1719	0.2552	0.3385	0.4219	0.5052	0.5885	0.6719	0.7552	0.8385	0.9219
0.1250"	1/8"	0.0104	0.0938	0.1771	0.2604	0.3438	0.4271	0.5104	0.5938	0.6771	0.7604	0.8438	0.9271
0.1875"	3/16"	0.0156	0.0990	0.1823	0.2656	0.3490	0.4323	0.5156	0.5990	0.6823	0.7656	0.8490	0.9323
0.2500"	1/4"	0.0208	0.1042	0.1875	0.2708	0.3542	0.4375	0.5208	0.6042	0.6875	0.7708	0.8542	0.9375
0.3125"	5/16"	0.0260	0.1094	0.1927	0.2760	0.3594	0.4427	0.5260	0.6094	0.6927	0.7760	0.8594	0.9427
0.3750"	3/8"	0.0313	0.1146	0.1979	0.2812	0.3646	0.4479	0.5313	0.6146	0.6979	0.7813	0.8646	0.9479
0.4375"	7/16"	0.0365	0.1198	0.2031	0.2865	0.3698	0.4531	0.5365	0.6198	0.7031	0.7865	0.8698	0.9531
0.5000"	1/2"	0.0417	0.1250	0.2083	0.2917	0.3750	0.4583	0.5417	0.6250	0.7083	0.7917	0.8750	0.9583
0.5625"	9/16"	0.0469	0.1302	0.2135	0.2969	0.3802	0.4635	0.5469	0.6302	0.7135	0.7969	0.8802	0.9635
0.6250"	5/8"	0.0521	0.1354	0.2188	0.3021	0.3854	0.4688	0.5521	0.6354	0.7188	0.8021	0.8854	0.9688
0.6875"	11/16"	0.0573	0.1406	0.2240	0.3073	0.3906	0.4740	0.5573	0.6406	0.7240	0.8073	0.8906	0.9740
0.7500"	3/4"	0.0625	0.1458	0.2292	0.3125	0.3958	0.4792	0.5625	0.6458	0.7292	0.8125	0.8958	0.9792
0.8125"	13/16"	0.0677	0.1510	0.2344	0.3177	0.4010	0.4844	0.5677	0.6510	0.7344	0.8177	0.9010	0.9844
0.8750"	7/8"	0.0729	0.1563	0.2396	0.3229	0.4063	0.4896	0.5729	0.6563	0.7396	0.8229	0.9063	0.9896
0.9375"	15/16"	0.0781	0.1615	0.2448	0.3281	0.4115	0.4948	0.5781	0.6615	0.7448	0.8281	0.9219	0.9948
		0"	1"	2"	3"	4"	5"	6"	7"	8"	9"	10"	11"

Example: 1/8" = 0.0104' (column 3, row 3)
1-1/2" = 0.1250' (column 4, row 9)
8-11/16" = 0.7240' (column 11, row 12)