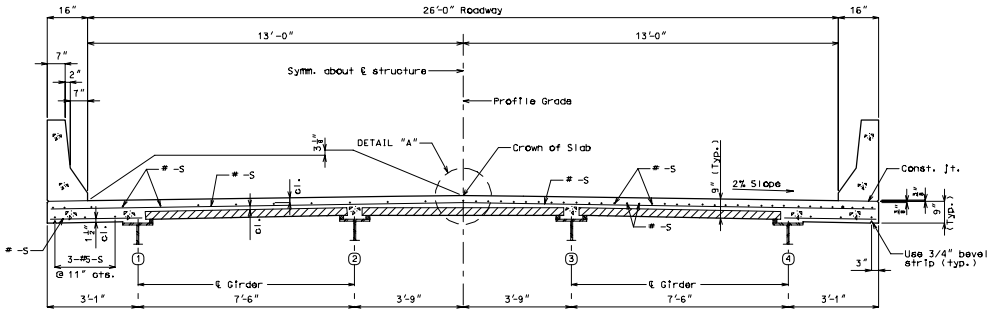

HALF SECTION NEAR ℄ SPAN HALF SECTION NEAR INTERMEDIATE BENT

26'-0" ROADWAY - 4 GIRDER (SYMM.)

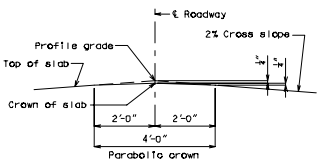

DETAIL "A"

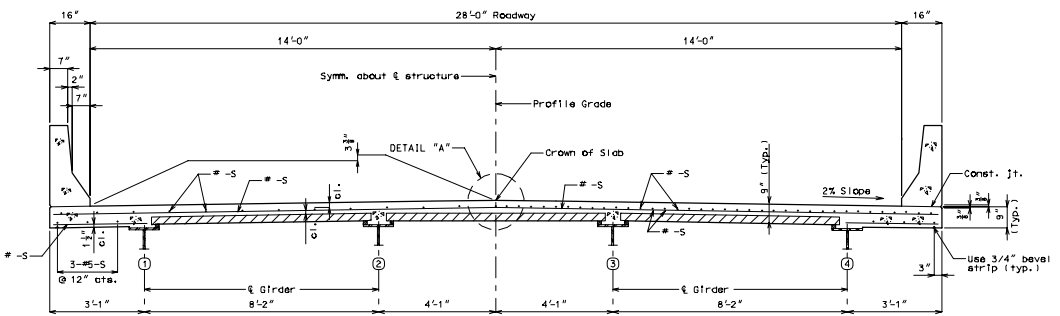

HALF SECTION NEAR ℄ SPAN HALF SECTION NEAR INTERMEDIATE BENT

28'-0" ROADWAY - 4 GIRDER (SYMM.)

SLAB 1L

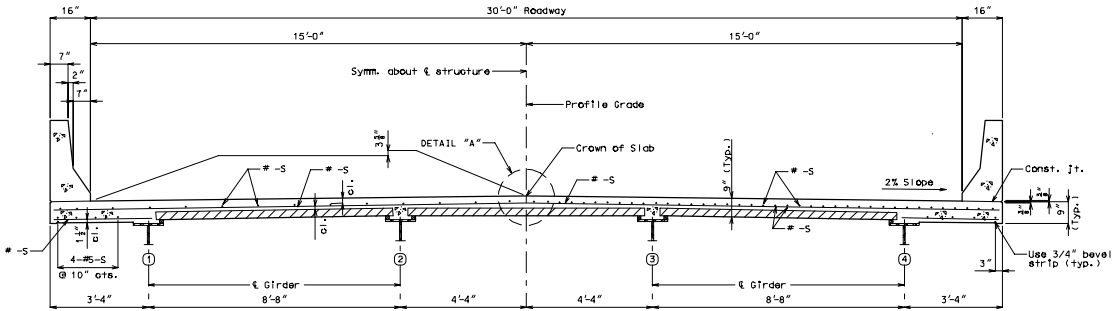

HALF SECTION NEAR ℄ SPAN HALF SECTION NEAR INTERMEDIATE BENT

30'-0" ROADWAY - 4 GIRDER (SYMM.)

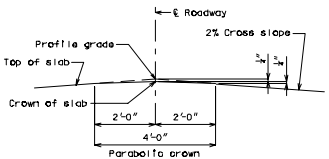

DETAIL "A"

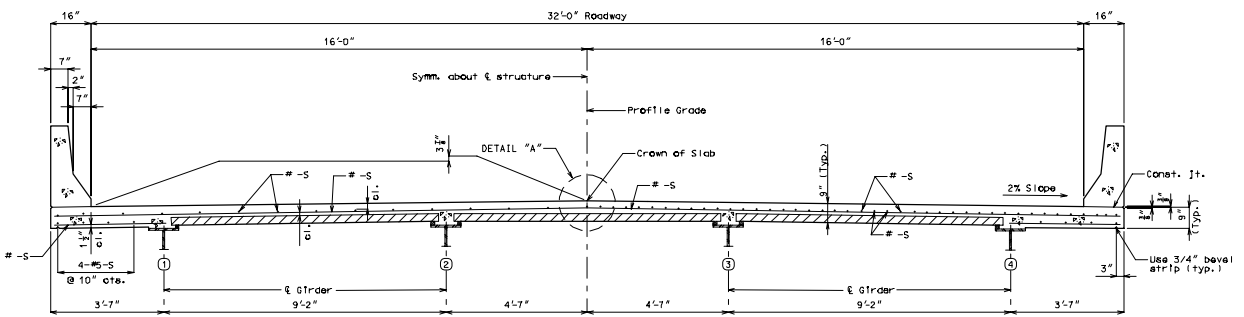

HALF SECTION NEAR ℄ SPAN HALF SECTION NEAR INTERMEDIATE BENT

32'-0" ROADWAY - 4 GIRDER (SYMM.)

SLAB 2L

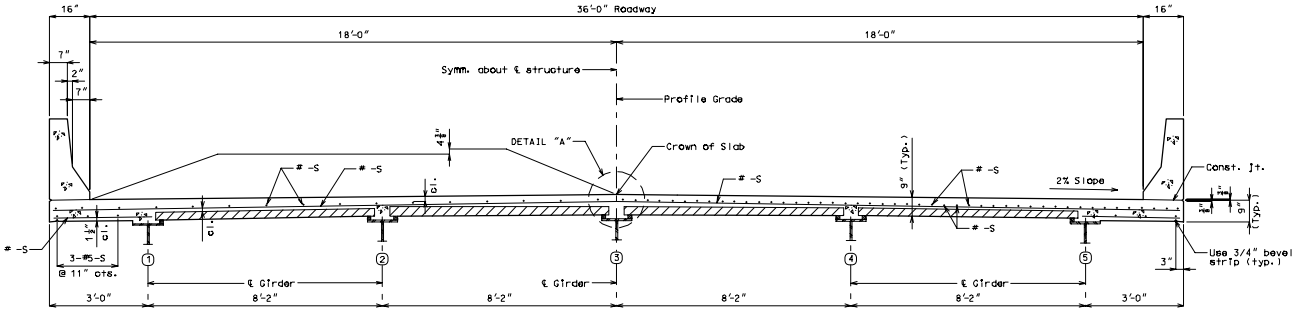

HALF SECTION NEAR ℄ SPAN HALF SECTION NEAR INTERMEDIATE BENT

36'-0" ROADWAY - 5 GIRDER (SYMM.)

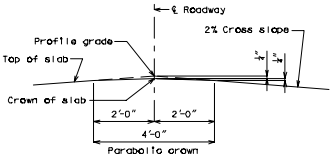

DETAIL "A"

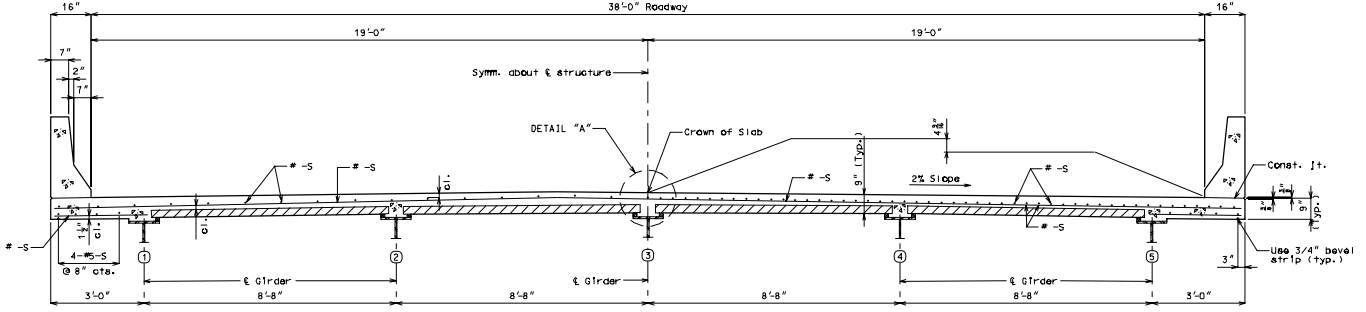

HALF SECTION NEAR ℄ SPAN HALF SECTION NEAR INTERMEDIATE BENT

38'-0" ROADWAY - 5 GIRDER (UNSYMM.)

SLAB 3L

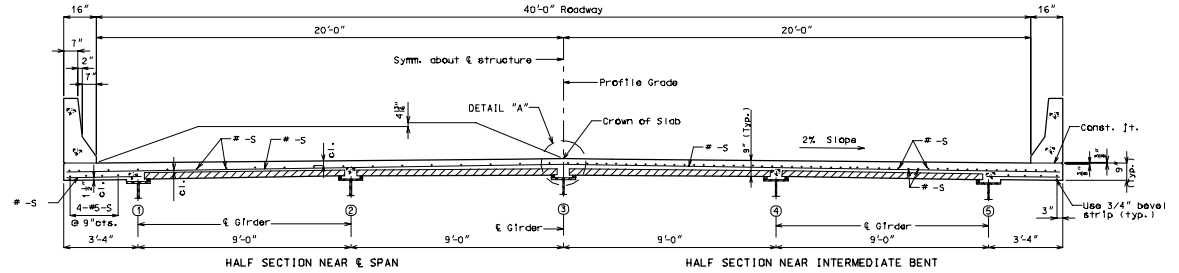

40'-0" ROADWAY - 5 GIRDER (SYMM.)

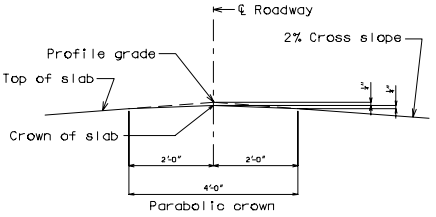

DETAIL "A"

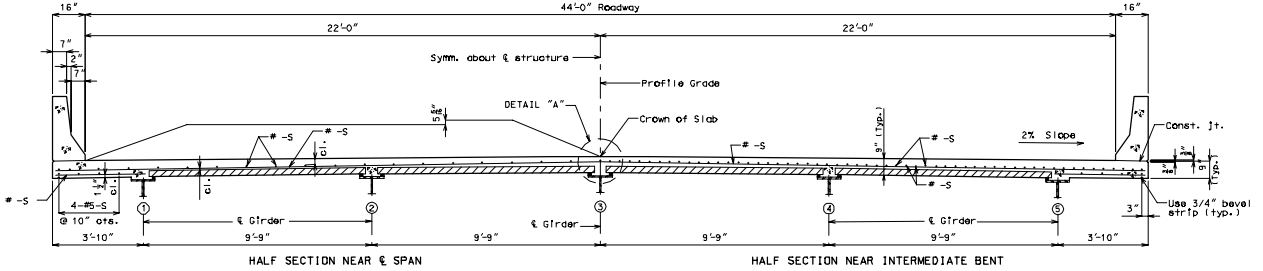

44'-0" ROADWAY - 5 GIRDER (SYMM.)

SLAB 4L

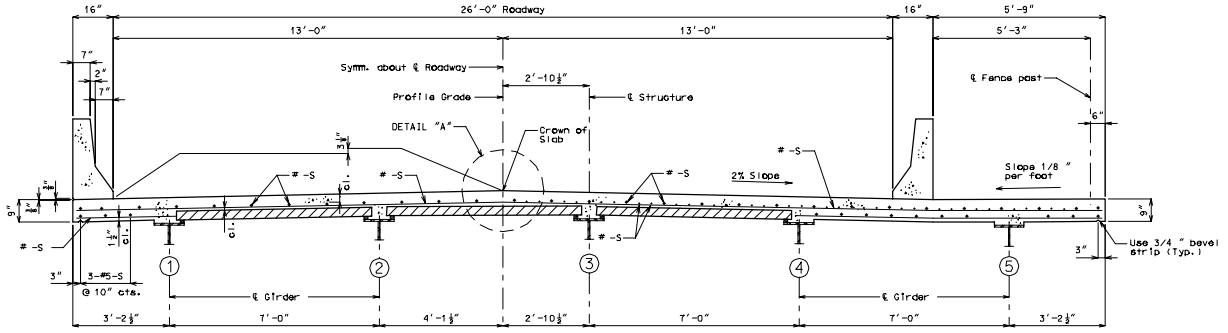

HALF SECTION NEAR ℄ SPAN

HALF SECTION NEAR INTERMEDIATE BENT

26'-0" ROADWAY - 5 GIRDER

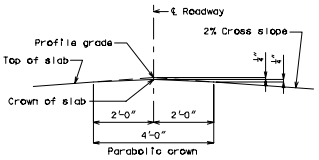

DETAIL "A"

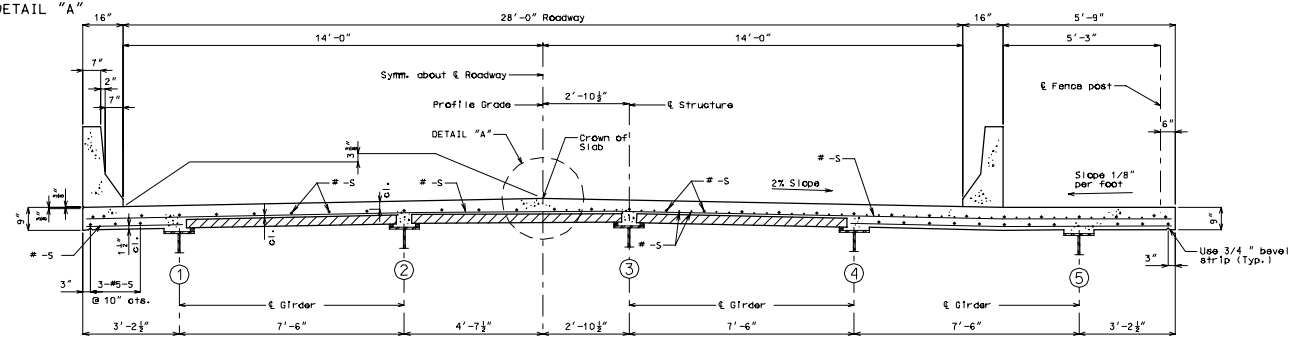

HALF SECTION NEAR ℄ SPAN

HALF SECTION NEAR INTERMEDIATE BENT

28'-0" ROADWAY - 5 GIRDER

SLAB 5

REV.

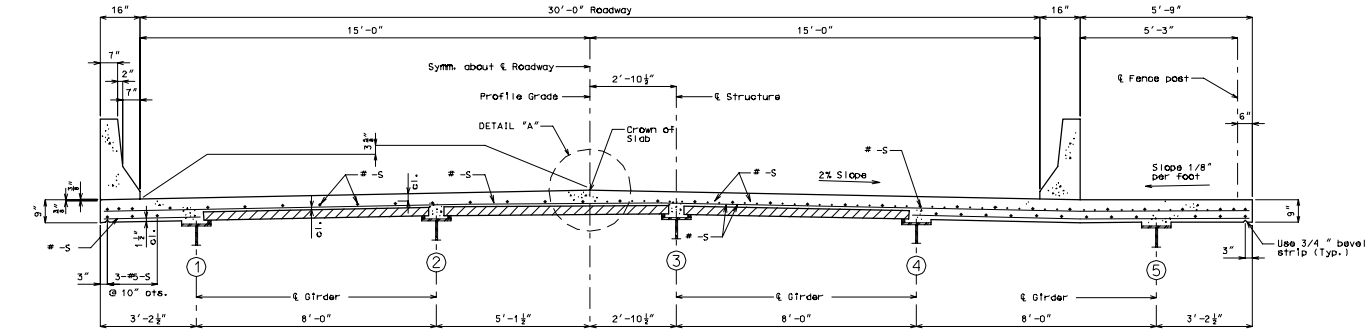

HALF SECTION NEAR ℄ SPAN

HALF SECTION NEAR INTERMEDIATE BENT

30'-0" ROADWAY - 5 GIRDER

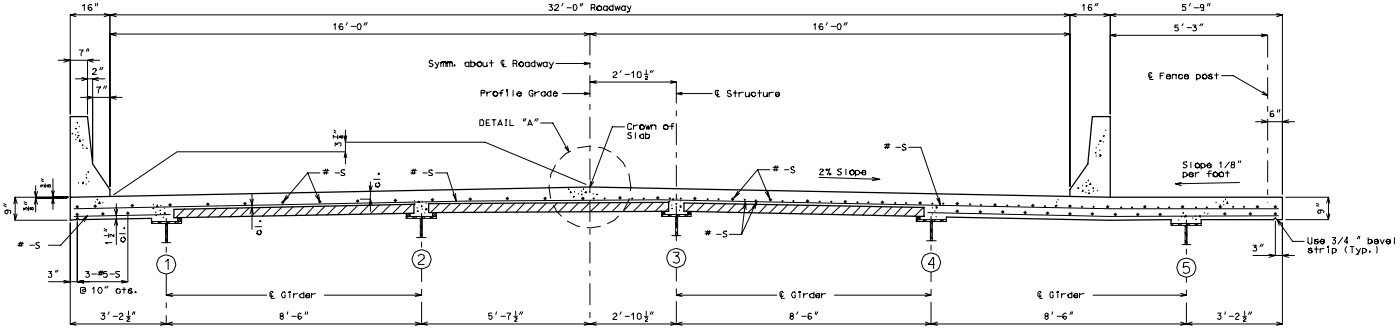

HALF SECTION NEAR ℄ SPAN

HALF SECTION NEAR INTERMEDIATE BENT

32'-0" ROADWAY - 5 GIRDER

SLAB 6

REV.

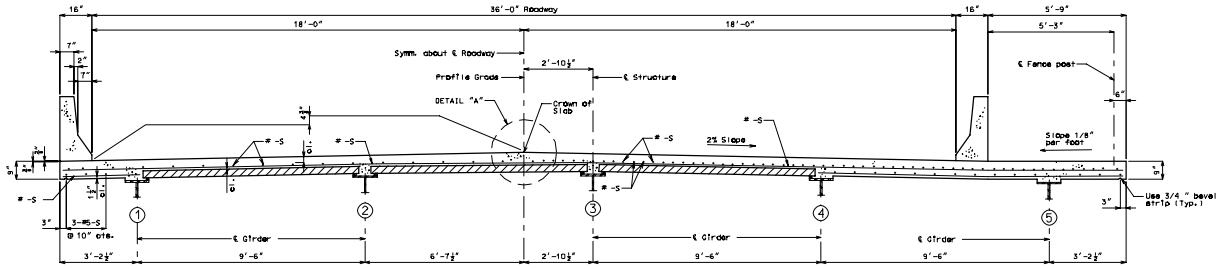

HALF SECTION NEAR ℄ SPAN

HALF SECTION NEAR INTERMEDIATE BENT

36'-0" ROADWAY - 5 GIRDER

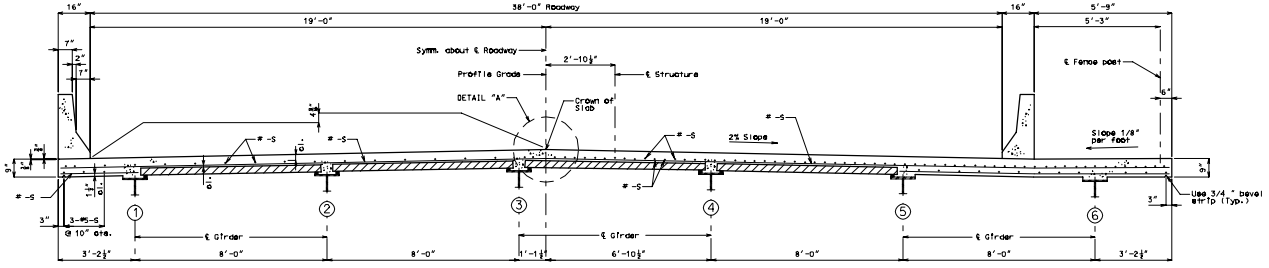

HALF SECTION NEAR ℄ SPAN

HALF SECTION NEAR INTERMEDIATE BENT

38'-0" ROADWAY - 6 GIRDER

SLAB 7

REV.

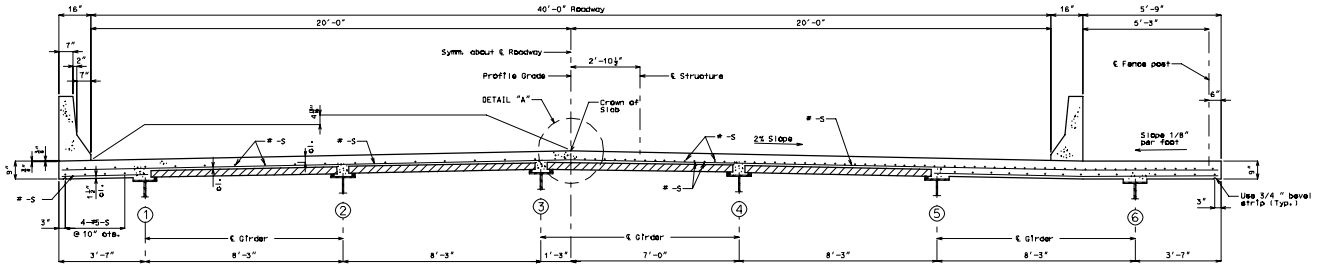

HALF SECTION NEAR ℄ SPAN

HALF SECTION NEAR INTERMEDIATE BENT

40'-0" ROADWAY - 6 GIRDER

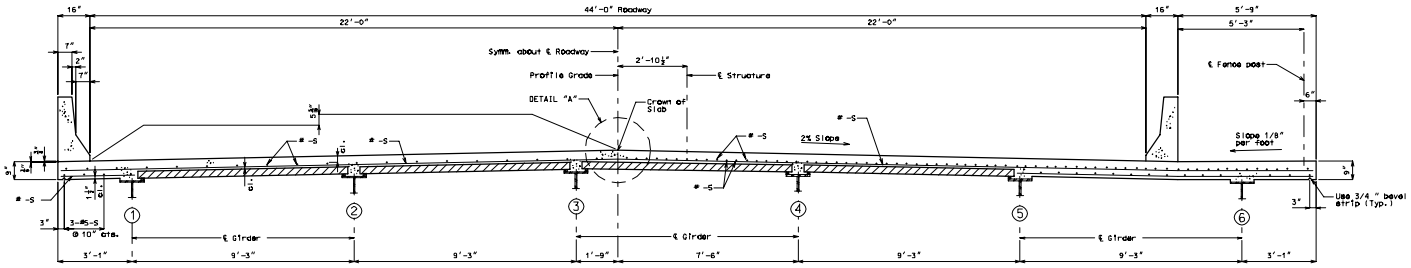

HALF SECTION NEAR ℄ SPAN

HALF SECTION NEAR INTERMEDIATE BENT

44'-0" ROADWAY - 6 GIRDER

SLAB 8

REV.